hansgrohe

Life is waterful.

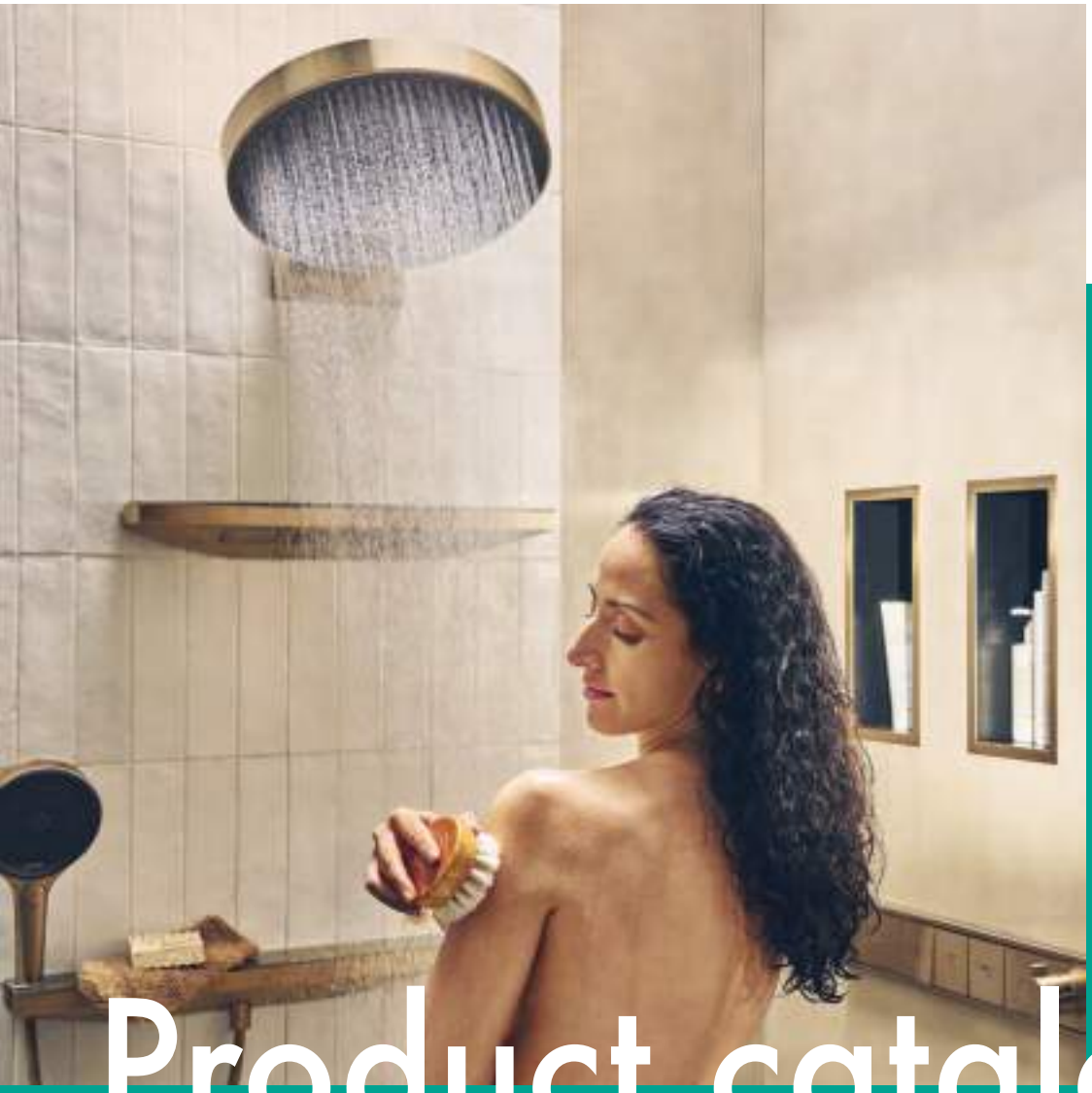

Product catalogue 2025

Bathroom & Kitchen

hansgrohe.com

Hansgrohe contact

Hansgrohe Headquarters

The Hansgrohe Master Service - Headquarters

Service hours:
Monday-Thursday: 8:00 am - 4:00 pm
Friday: 8:00 am - 3:00 pm

Phone: +49 7836 51-1282
Fax: +49 7836 51-1440
info@hansgrohe.com

You will also find technical information at
pro.hansgrohe-int.com

Global Projects Services - Headquarters

gpservices@hansgrohe.com

You will also find tender texts and planning details at
pro.hansgrohe-int.com/planning-data

Hansgrohe Aquademie - Headquarters

Monday-Friday: 7:30 am - 7:00 pm
Saturday-Sunday: 10:00 am - 4:00 pm

Hansgrohe SE
Hansgrohe Aquademie
Auestr. 9
77761 Schiltach/Germany
Phone: +49 7836 51-3272
Fax: +49 7836 51-1505

The Aquademie is our adventure centre on all aspects of water.
pro.hansgrohe-int.com/aquademie

Errors and omissions excepted.

Upon publication of this price list, all previously published price lists are no longer valid.

Figures given for dimensional drawings are in mm.

When installing the products, please follow the instructions in the installation manual.

All products are subject to availability.
The availability may be temporarily impacted by material shortages, interruptions in the supply chain or other force majeure events. Please contact us for further details.

The following general terms and conditions apply:
https://www.hansgrohe.com/terms-of-conditions

Product catalogue 2025

Content

	The brand hansgrohe	6
Showers	Hand showers	51
	Shower sets	73
	Shower bars	111
	Shower holder sets	125
	Shower holders	141
	Shower hoses	149
	Overhead showers	155
	Showerpipes & shower panels	215
	Drains	265
	Wastes & overflows	299
Thermostatic mixers	Thermostats exposed installation	319
	Thermostats concealed installation	341
Installation	Basic sets	391
Mixers	Metropol	431
	Metris	445
	Finoris	455
	Tecturis	465
	Vivenis	489
	Talis	499
	Focus	525
	Rebris	541
	Logis	563
	Vernis	585
	Electronic mixers	615
Accessories	Accessories	623
Kitchen	Kitchen mixers	669
	Kitchen sinks	725
Planning	Planning & Installation	741
Spare parts	Spare parts	761

Incomparable experiences with water

Check out our modern bathroom planning solutions. Alongside innovative technology, which enables the user to enjoy water responsibly, it's all about ergonomic comfort and aesthetic indulgence. We are therefore constantly working on developing new products. Design the perfect wellness oasis for your customers with everything from the PowderRain spray type for sensual showering, to our new installation masterpiece the iBox universal 2, right through to the Tecturis tap range with its clean lines.

Our values – your advantages

Pioneering

Intuitive operation, lower water and electricity bills or less need to clean: All factors that will leave your customers beaming from ear to ear. Build on pioneering innovation with excellent customer value. This is precisely what our experts in our research departments are working towards in the sound and spray laboratory, where they develop high-quality products with a certain je ne sais quoi. With beautiful surface finishes, energy-efficient spray types, built-in safety, and integrated indulgence.

Award-winning products

Elegant functionality appeals to both the heart and mind, and it's something we specialise in. Our products are consistently award-winning, outlasting fads and instead providing long-lasting value, whether they are found in the home or in a world-famous hotel. Good design makes all the difference and always ensures an excellent experience. With over 30 years of collaboration with PHOENIX, hansgrohe is a leader within the industry, racking up more than 700 awards for our design achievements.

Highest standards

Providing our customers with the highest quality at all times is a fundamental part of the hansgrohe company philosophy. We have been manufacturing high-quality bathroom and kitchen products for over 120 years, and we are proud of our extensive quality control processes, especially as many of our products go above and beyond the required standards.

We offer our consumers a voluntary guarantee of 5 years* plus guaranteed availability for 15 years.

With our high service quality, you can trust in a reliable partner. The master service is also on hand to help with issues, no matter their complexity. And our digital PRO Video Service** is here to make things even simpler, as it allows you to contact the master service via video.

Take over and act

Saving water and energy are two matters close to hansgrohe's heart. And so we develop products for impressive water experiences with reduced resource consumption. Because we don't want to make our customers choose between wellbeing and sustainability. As the use phase of mixers and shower heads installed in people's homes is the most carbon-intensive, we are converting our entire water-bearing product range to water- and energy-saving technologies by 2030. Some of our products are already equipped with these technologies, such as our Pulsify showers, which use up to 40 % less water than our showers without this technology thanks to EcoSmart with integrated flow limiter. Our products are also robust, long-lasting, and easy to repair.

* For more information, visit: **hansgrohe.com/guarantee**
** Only available in certain countries

How do we define "premium"?

Brand quality – uncompromisingly high-end

Our customers can expect the highest quality in terms of materials, shapes, functionality, and sustainability. Ultimately, they see and use their bathroom products every day. Everything should always look exceptional, be easy to use, and conserve resources. We therefore always involve our consumers and plumbers in the testing of our concepts, prototypes, and products. Our promise: You will get long-lasting brand quality when you choose hansgrohe.

Product quality – safe, reliable, simply the best

hansgrohe relies on premium quality. Our customers see and feel this - and enjoy high-quality products for a long time.

Health takes top priority for us: hansgrohe products meet the strictest drinking water regulations, hold all the major approvals, and are easy to install. And our standards are far higher than the norm. We therefore prefer to manufacture our main components ourselves, and we run our own spray and sound laboratory. Each product needs to prove its worth over and over in test cycles, stress tests, and quality assurance inspections. When it comes to research, development, and manufacturing, only the best will do.

Service quality – A* in service

The hansgrohe Master Service offers customers professional information and advice on all questions and issues. Customers can also chat to us at trade shows and events. hansgrohe offers a voluntary manufacturer's guarantee of five years. Spare parts can be purchased from us online, and we will guarantee 15 years of availability of said parts. Our specialist partners range from tradespeople to retailers, right through to planners and architects. They have access to our expertise 24/7 via online support, seminars, and training. We are regularly presented with "best of" awards from our plumbing, heating, and cooling specialist partners.

2024 BEST OF SHK AWARD
1. PLATZ HERSTELLER SANITÄR
Präsentiert von Si

"At hansgrohe, we also think in terms of solutions when it comes to service, and we have one goal: we want to turn customers into fans of our brand. That's why we support them quickly and comprehensively across all channels."

Danny Stahl, Head of Professional Service & Support, Hansgrohe Group

PRO hansgrohe: Our redesigned website has many advantages for you!

We have redesigned our professional website to better support you in your work with our expertise: The AXOR and hansgrohe brands are now combined. Thanks to optimized filter options and navigation, you can find products and topics even faster. The modern design ensures an inspiring browsing experience.
If you also want to benefit from exclusive content or attractive bonus programs: Register and secure exciting additional know-how!

pro.hansgrohe.com

*For more information, visit: **hansgrohe.com/guarantee**

	Code no.
Croma 100	
Shower system for exposed installation Vario EcoSmart with Ecostat Comfort thermostat and shower bar 65 cm	27032000
Shower system for exposed installation Vario EcoSmart with Ecostat Comfort thermostat and shower bar 90 cm	27033000
Shower system for exposed installation Vario with Ecostat Comfort thermostat and shower bar 65 cm	27034000
Shower system for exposed installation Vario with Ecostat Comfort thermostat and shower bar 90 cm	27035000
Shower system for exposed installation Multi with Ecostat Comfort thermostat and shower bar 65 cm	27086000
Shower holder set Mono with shower hose 125 cm	27574000
Shower holder set Multi with shower hose 125 cm	27593000
Shower set Vario EcoSmart with shower bar 90 cm and soap dish	27653000
Shower set Mono with shower bar 65 cm and soap dish	27717000
Shower set Mono with shower bar 90 cm and soap dish	27724000
Shower set Multi with shower bar 90 cm and soap dish	27774000
Shower set Multi with shower bar 65 cm and soap dish	27775000
Hand shower Multi	28536000
Hand shower Multi EcoSmart	28538000
Hand shower 1jet	28580000
Hand shower Mono EcoSmart	28583000
Croma E	
Hand shower 110 1jet	26814140
Hand shower 110 1jet	26814340
Hand shower 110 1jet	26814400
Hand shower 110 1jet	26814670
Hand shower 110 1jet	26814700
Hand shower 110 1jet	26814990
Croma Select E	
Shower holder set 110 1jet with shower hose 160 cm	26412400
Overhead shower 180 2jet	26524000
Overhead shower 180 2jet	26524400
Shower set 110 Multi with shower bar 65 cm	26580400
Shower set 110 1jet EcoSmart 9 l/min with shower bar 65 cm	26585400
Shower set 110 Vario with shower bar 65 cm and soap dish	26586400
Shower set 110 Vario with shower bar 90 cm	26592400
Shower set 110 1jet EcoSmart 9 l/min with shower bar 90 cm	26595400
Croma Select S	
Shower holder set 110 1jet with shower hose 160 cm	26410400
Shower holder set 110 1jet with shower hose 125 cm	26420400
Overhead shower 180 2jet	26522000
Overhead shower 180 2jet	26522400

	Code no.
Shower set 110 1jet EcoSmart with shower bar 65 cm	26565400
Shower set 110 Multi with shower bar 90 cm	26570400
Shower set 110 Vario with shower bar 90 cm	26572400
Shower set 110 1jet EcoSmart 9 l/min with shower bar 90 cm	26575400
Crometta	
Hand shower 100 Vario	26330400
Hand shower 100 1jet	26331400
Shower set 100 Vario with shower bar 65 cm	26532400
Shower set 100 1jet with shower bar 65 cm	26533400
Shower set 100 Vario with shower bar 90 cm	26536400
Shower set 100 1jet with shower bar 90 cm	26537400
Shower holder set 100 1jet with shower hose 160 cm	26567400
Shower holder set 100 1jet with shower hose 125 cm	26690400
Shower holder set 100 Vario with shower hose 125 cm	26691400
Shower holder set 100 Vario with shower hose 160 cm	26692400
Crometta E	
Shower system 240 1jet with single lever mixer	27957000
Exafill S	
Finish set bath filler, waste and overflow set	58117820
Focus M41	
Single lever kitchen mixer 240, pull-out spray, 2jet, sBox	73880000
Single lever kitchen mixer 240, pull-out spray, 2jet, sBox	73880800
Single lever kitchen mixer 240, EcoSmart, pull-out spray, 2jet, sBox	73895000
Focus M42	
Single lever kitchen mixer 120, LowPressure/vented hot water cylinders, 1jet	71804000
Single lever kitchen mixer 120, 1jet	71806000
Single lever kitchen mixer 120, 1jet	71806800
Single lever kitchen mixer 120, installation in front of a window, 1jet	71807000
Single lever kitchen mixer 100, 1jet	71808000
Single lever kitchen mixer 100, 1jet	71808800
Single lever kitchen mixer 220, pull-out spray, 2jet, sBox	71820000
Single lever kitchen mixer 220, pull-out spray, 2jet, sBox	71820800
Single lever kitchen mixer 180, pull-out spray, 2jet, sBox	71821000
Single lever kitchen mixer 180, pull-out spray, 2jet, sBox	71821800
Single lever kitchen mixer 150, pull-out spout, 1jet, sBox	71829000
Single lever kitchen mixer 150, pull-out spout, 1jet, sBox	71829800
Single lever kitchen mixer 180, EcoSmart, pull-out spray, 2jet	71862000

	Code no.
Isiflex	
Shower hose 160 cm	28276450
Shower hose 160 cm	28276800
Logis	
4-hole rim mounted bath mixer	71314000
Metris	
Single lever basin mixer with bidette hand shower and shower hose 160 cm	31285000
Single lever bath mixer for concealed installation	31484000
Single lever shower mixer for concealed installation	31686000
Metris M71	
Single lever kitchen mixer 320, EcoSmart, pull-out spray, 2jet	14780000
Single lever kitchen mixer 320, EcoSmart, pull-out spout, 1jet	14781000
Single lever kitchen mixer 320, EcoSmart, 1jet	14782000
Single lever kitchen mixer 320, pull-out spray, 2jet	14820000
Single lever kitchen mixer 320, pull-out spray, 2jet	14820800
Single lever kitchen mixer 320, pull-out spout, 1jet	14821000
Single lever kitchen mixer 320, pull-out spout, 1jet	14821800
Single lever kitchen mixer 320, 1jet	14822000
Single lever kitchen mixer 320, 1jet	14822800
Single lever kitchen mixer 320, installation in front of a window, 1jet	14823000
Single lever kitchen mixer 220, pull-out spray, 2jet	14834000
Single lever kitchen mixer 220, pull-out spray, 2jet	14834800
Single lever kitchen mixer 220, pull-out spray, 2jet, sBox	73800000
Single lever kitchen mixer 220, pull-out spray, 2jet, sBox	73800800
Single lever kitchen mixer 320, pull-out spray, 2jet, sBox	73801000
Single lever kitchen mixer 320, pull-out spray, 2jet, sBox	73801800
Single lever kitchen mixer 320, pull-out spout, 1jet, sBox	73812000
Single lever kitchen mixer 320, pull-out spout, 1jet, sBox	73812800
Single lever kitchen mixer 220, EcoSmart, pull-out spray, 2jet, sBox	73823000
Single lever kitchen mixer 320, EcoSmart, pull-out spray, 2jet, sBox	73824000
Single lever kitchen mixer 320, EcoSmart, pull-out spout, 1jet, sBox	73828000
Metris Select M71	
Single lever kitchen mixer 320, EcoSmart, 1jet	14785000
Single lever kitchen mixer 320, EcoSmart, pull-out spout, 1jet	14786000
Single lever kitchen mixer 240, pull-out spout, 1jet	14857000
Single lever kitchen mixer 240, pull-out spout, 1jet	14857800
Single lever kitchen mixer 320, pull-out spout, 1jet	14884000

	Code no.
Single lever kitchen mixer 320, pull-out spout, 1jet	14884800
Single lever kitchen mixer 240, pull-out spout, 1jet, sBox	73802000
Single lever kitchen mixer 240, pull-out spout, 1jet, sBox	73802800
Single lever kitchen mixer 320, pull-out spout, 1jet, sBox	73803000
Single lever kitchen mixer 320, pull-out spout, 1jet, sBox	73803800
2-hole single lever kitchen mixer 200, pull-out spout, 1jet, sBox	73804000
2-hole single lever kitchen mixer 200, pull-out spout, 1jet, sBox	73804800
Single lever kitchen mixer 320, EcoSmart, pull-out spout, 1jet, sBox	73807000
2-hole single lever kitchen mixer 200, EcoSmart, pull-out spout, 1jet, sBox	73825000
Metropol	
Single lever basin mixer 100 with lever handle and push-open waste set	32502000
Single lever basin mixer with lever handle with bidette hand shower and shower hose 160 cm	32522000
Single lever basin mixer floor-standing with lever handle without waste set	32530000
Basin mixer 100 Select with push-open waste set	32570000
Basin mixer 110 Select with push-open waste set	32571000
Basin mixer 260 Select for wash bowls with push-open waste set	32572000
Single lever basin mixer 100 with loop handle for handrinse basins with push-open waste set	74500000
Single lever basin mixer 100 with loop handle and push-open waste set	74502000
Single lever basin mixer 110 with loop handle and pop-up waste set	74506000
Single lever basin mixer 110 with loop handle and push-open waste set	74507000
Single lever basin mixer 230 with loop handle and push-open waste set	74511000
Single lever basin mixer 260 with loop handle for wash bowls with push-open waste set	74512000
3-hole basin mixer 110 with loop handles and push-open waste set	74514000
3-hole basin mixer 160 with loop handles and push-open waste set	74515000
Single lever bidet mixer with loop handle and push-open waste set	74520000
Single lever basin mixer with loop handle with bidette hand shower and shower hose 160 cm	74522000
Single lever basin mixer for concealed installation wall-mounted with loop handle and spout 16.5 cm	74525000
Single lever basin mixer for concealed installation wall-mounted with loop handle and spout 22.5 cm	74526000
Single lever basin mixer floor-standing with loop handle without waste set	74530000
Single lever bath mixer floor-standing with loop handle	74532000
Single lever bath mixer for exposed installation with loop handle	74540000
Single lever bath mixer for concealed installation with loop handle for iBox universal	74545000
Single lever bath mixer for concealed installation with loop handle and integrated security combination according to EN1717 for iBox universal	74546000
2-hole rim mounted single lever bath mixer with loop handle	74548000
3-hole rim mounted single lever bath mixer with loop handle for Secuflex	74550000

	Code no.
3-hole rim mounted single lever bath mixer with loop handle	74551000
4-hole rim mounted bath mixer with loop handles for Secuflex	74552000
4-hole rim mounted bath mixer with loop handles	74553000
Single lever shower mixer for exposed installation with loop handle	74560000
Single lever shower mixer for concealed installation with loop handle for iBox universal	74565000

Raindance E

Showerpipe 300 1jet with ShowerTablet 600	27363000
Showerpipe 300 1jet EcoSmart with ShowerTablet 600	27364000

Raindance Select E

Hand shower 150 3jet	26550000
Hand shower 150 3jet	26550400
Hand shower 150 3jet EcoSmart	26551000
Hand shower 150 3jet EcoSmart	26551400
Shower set 150 3jet with shower bar 90 cm and soap dish	27857000

Raindance Select S

Shower set 150 3jet with shower bar 90 cm	26626000
Shower set 150 3jet with shower bar 90 cm	26626400
Shower system for exposed installation 150 3jet with Ecostat Select thermostat and shower bar 65 cm	27036000
Shower system for exposed installation 150 3jet with Ecostat Select thermostat and shower bar 65 cm	27036400
Shower system for exposed installation 150 3jet with Ecostat Select thermostat and shower bar 90 cm	27037000
Shower system for exposed installation 150 3jet with Ecostat Select thermostat and shower bar 90 cm	27037400
Showerpipe 240 2jet with thermostat	27129400
Showerpipe 300 2jet with thermostat	27133400
Shower set 150 3jet with shower bar 65 cm and soap dish	27802000
Shower set 150 3jet with shower bar 90 cm and soap dish	27803000
Hand shower 150 3jet	28587000
Hand shower 150 3jet	28587400

RainDrain Match

Finish set shower drain 600 with height adjustable frame	56036000
Finish set shower drain 600 with height adjustable frame	56036450
Finish set shower drain 600 with height adjustable frame	56036610
Finish set shower drain 700 with height adjustable frame	56037000
Finish set shower drain 700 with height adjustable frame	56037450
Finish set shower drain 700 with height adjustable frame	56037610
Finish set shower drain 800 with height adjustable frame	56038450
Finish set shower drain 800 with height adjustable frame	56038610
Finish set shower drain 900 with height adjustable frame	56040000

	Code no.
Finish set shower drain 900 with height adjustable frame	56040450
Finish set shower drain 1000 with height adjustable frame	56041000
Finish set shower drain 1000 with height adjustable frame	56041450
Finish set shower drain 1000 with height adjustable frame	56041610
Finish set shower drain 1200 with height adjustable frame	56042000
Finish set shower drain 1200 with height adjustable frame	56042450
Finish set shower drain 1200 with height adjustable frame	56042610

Rainfinity

Basic set for showerpipe 360 1jet for concealed installation	26840180
Showerpipe 360 1jet for concealed installation	26842000
Showerpipe 360 1jet for concealed installation	26842700

Rainmaker Select

Overhead shower 580 3jet	24001600
Overhead shower 460 1jet with ceiling connector	24002400
Overhead shower 460 1jet with ceiling connector	24002600
Overhead shower 460 1jet with shower arm	24003600
Overhead shower 460 2jet with ceiling connector	24004400
Overhead shower 460 2jet with ceiling connector	24004600
Overhead shower 460 2jet with shower arm	24005600
Overhead shower 460 3jet with ceiling connector	24006400
Overhead shower 460 3jet with ceiling connector	24006600
Overhead shower 460 3jet with shower arm	24007600
Overhead shower 460 1jet EcoSmart+ with ceiling connector	24012400
Overhead shower 460 1jet EcoSmart with shower arm	24013400
Overhead shower 460 2jet EcoSmart with ceiling connector	24014400
Overhead shower 460 2jet EcoSmart with shower arm	24015400
Overhead shower 460 3jet EcoSmart with ceiling connector	24016400
Overhead shower 460 3jet EcoSmart with shower arm	24017400
Showerpipe 460 2jet EcoSmart with thermostat	27028400
Showerpipe 460 3jet EcoSmart with thermostat	27029400
Showerpipe 460 3jet with thermostat	27106400
Showerpipe 460 2jet with thermostat	27109400

ShowerTablet Select

Bath thermostat 700 for exposed installation	13183000
Thermostat 700 universal for exposed installation for 2 functions	13184000
Thermostat 700 universal for exposed installation for 2 functions	13184400

Talis M52

Single lever kitchen mixer 170, pull-out spray, 2jet	32841000

	Code no.
Talis S	
Single lever basin mixer with pop-up waste set	32020000
Single lever basin mixer without waste set	32031000
Single lever basin mixer for LowPressure/vented hot water cylinder with pop-up waste set	32032000
Single lever basin mixer 200 with swivel spout and pop-up waste set	32070000
Single lever bath mixer for exposed installation	32420000
Single lever bath mixer for concealed installation for iBox universal	32475000
Single lever bath mixer for concealed installation with integrated security combination according to EN1717 for iBox universal	32477000
Single lever shower mixer for exposed installation	32620000
Single lever shower mixer for concealed installation for iBox universal	32675000
Single lever basin mixer 210 with swivel spout and pop-up waste set	72105000
Single lever basin mixer 250 without waste set	72116000
Talis Select M51	
Single lever kitchen mixer 300, 1jet	72820000
Single lever kitchen mixer 300, 1jet	72820800
Single lever kitchen mixer 300, EcoSmart, 1jet	72825000
Single lever kitchen mixer 220, pull-out spout, 1jet, sBox	73852000
Single lever kitchen mixer 220, pull-out spout, 1jet, sBox	73852800
Single lever kitchen mixer 300, pull-out spout, 1jet, sBox	73853000
Single lever kitchen mixer 300, pull-out spout, 1jet, sBox	73853800
Talis Select S	
Basin mixer 80 with pop-up waste set	72040000
Basin mixer 80 without waste set	72041000
Basin mixer 100 with pop-up waste set	72042000
Basin mixer 100 without waste set	72043000
Basin mixer 190 with pop-up waste set	72044000
Basin mixer 190 without waste set	72045000
Unica	
Shower bar C 90 cm with Isiflex shower hose 160 cm	27610000
Shower bar C 65 cm with Isiflex shower hose 160 cm	27611000
Vernis Blend	
Hand shower 100 Vario project pack (12 pcs.)	26085000
Hand shower 100 Vario	26270000
Hand shower 100 Vario	26270670
Shower holder set 100 Vario with shower hose 160 cm	26273000
Shower set 100 Vario with shower bar Crometta 65 cm	26275000
Showerpipe 200 1jet with thermostat project pack (2 pcs.)	26285000

	Code no.
Overhead shower 200 1jet project pack (12 pcs.)	26365000
Shower set 100 Vario with shower bar S Puro 65 cm	26422670
Vernis Shape	
Showerpipe 230 1jet with thermostat project pack (2 pcs.)	26287000
Overhead shower 230 1jet project pack (12 pcs.)	26579000
2-hole rim mounted bath mixer with diverter valve and Vernis Blend hand shower Vario	71462670
Bath mixer set for concealed installation	71472670
Single lever basin mixer 100 with isolated water conduction and pop-up waste set project pack (6 pcs.)	71597000
Shower holder	28321000
Shower holder Porter classic	28324000
Shower holder Porter S	28331800
F17 Mobile drainboard	40962800

brand	Code no.	EAN	page
01			
HG	01000180	4059625350867	294
HG	01001180	4059625350850	294
HG	01002180	4059625350836	295
HG	01500180	4059625316900	394
HG	01800180	4011097347240	399
HG	01850180	4011097677545	399
02			
HG	02024000	4011097100005	147
06			
HG	06010000	4011097100135	318
10			
AX	10452180	4011097254104	406
13			
HG	13077000	4059625464960	390
HG	13085000	4011097102184	765
HG	13111000	4011097754161	330
HG	13111400	4011097753928	330
HG	13114000	4011097678832	333
HG	13114140	4059625229774	333
HG	13114340	4059625229781	333
HG	13114670	4059625229798	333
HG	13114700	4059625229804	333
HG	13114990	4059625229811	333
HG	13115000	4011097678849	334
HG	13116000	4011097678856	332
HG	13116140	4059625229828	332
HG	13116340	4059625229835	332
HG	13116670	4059625229842	332
HG	13116700	4059625229859	332
HG	13116990	4059625229866	332
HG	13117000	4011097678863	333
HG	13122000	4011097739205	338
HG	13123000	4011097739229	338
HG	13132000	4011097526058	502
HG	13141000	4011097661308	331
HG	13141400	4011097666402	331
HG	13151000	4011097717036	327
HG	13151400	4011097717029	327
HG	13159180	4011097835310	407
HG	13161000	4011097661315	330
HG	13161400	4011097665696	330
HG	13171000	4011097717012	326
HG	13171400	4011097717005	326
HG	13201000	4011097799599	337
HG	13211000	4011097799582	337
HG	13233180	4011097629407	407
HG	13244180	4011097629414	408
HG	13323000	4059625522172	336
HG	13324000	4059625522165	335
HG	13324670	4059625522141	335
HG	13325000	4059625522127	336
HG	13325670	4059625522103	336
HG	13346000	4059625522400	334
HG	13346670	4059625522387	334
HG	13347000	4059625522363	335
HG	13347670	4059625522349	335
HG	13414000	4011097532509	507
HG	13423000	4011097603766	506
HG	13424000	4011097594774	506

brand	Code no.	EAN	page
HG	13437180	4011097660837	408
HG	13439180	4011097734033	407
HG	13440180	4059625321218	408
HG	13444180	4011097140841	409
HG	13481180	4059625479285	404
HG	13560180	4059625202968	404
HG	13588000	4059625477359	394
HG	13593000	4011097745015	401
HG	13593140	4059625346716	401
HG	13593340	4059625346723	401
HG	13593670	4059625346693	401
HG	13593700	4059625346709	401
HG	13593990	4059625346730	401
HG	13595000	4011097333670	400
HG	13597000	4011097564739	401
HG	13597140	4059625250075	401
HG	13597340	4059625346839	401
HG	13597670	4059625346815	401
HG	13597700	4059625346822	401
HG	13601000	4011097783727	402
HG	13604000	4011097825915	401
HG	13612000	4059625464632	396
HG	13612140	4059625464625	396
HG	13612340	4059625464618	396
HG	13612670	4059625464601	396
HG	13612700	4059625464595	396
HG	13613000	4059625464571	396
HG	13613140	4059625464564	396
HG	13613340	4059625464557	396
HG	13613670	4059625464540	396
HG	13613700	4059625464533	396
HG	13614000	4059625464519	397
HG	13614140	4059625464502	397
HG	13614340	4059625464496	397
HG	13614670	4059625464489	397
HG	13614700	4059625464472	397
HG	13617000	4059625464458	396
HG	13617140	4059625464441	396
HG	13617340	4059625464434	396
HG	13617670	4059625464427	396
HG	13617700	4059625464410	396
HG	13618000	4059625464397	397
HG	13618140	4059625464380	397
HG	13618340	4059625464373	397
HG	13618670	4059625464366	397
HG	13618700	4059625464359	397
HG	13620180	4011097228747	410
HG	13622180	4011097625386	406
HG	13624000	4059625464335	398
HG	13624140	4059625464328	398
HG	13624340	4059625464311	398
HG	13624670	4059625464304	398
HG	13624700	4059625464298	398
HG	13628000	4059625464274	397
HG	13631000	4059625464267	398
HG	13632000	4059625464250	395
HG	13637000	4059625534090	395
HG	13638000	4059625536209	395
HG	13901000	4011097537122	313
HG	13902000	4011097537139	312

Code Numbers (HG = hansgrohe, AX = AXOR)

brand	Code no.	EAN	page
HG	13903000	4011097646411	313
HG	13904000	4011097666778	312
HG	13913000	4011097413754	766
HG	13950000	4011097350721	313
HG	13950140	4011097957050	313
HG	13950340	4059625266151	313
HG	13950670	4059625266137	313
HG	13950700	4059625266144	313
HG	13950990	4011097957128	313
HG	13952000	4011097105932	765
HG	13954000	4011097360393	312
HG	13964000	4011097105970	765
HG	13970000	4011097105994	769
HG	13971000	4011097178578	769
14			
HG	14095000	4011097165103	764
HG	14096000	4011097176222	764
HG	14495000	4011097255705	538
HG	14806000	4011097732992	700
HG	14847000	4011097823676	688
HG	14847800	4011097823669	688
HG	14883000	4011097748559	688
HG	14883800	4011097748566	688
15			
HG	15310180	4011097815602	413
HG	15311180	4059625034057	413
HG	15312180	4059625034040	413
HG	15313180	4059625034033	413
HG	15346000	4011097727219	339
HG	15355000	4059625034019	350
HG	15355400	4011097815619	350
HG	15355600	4059625034002	350
HG	15356000	4059625033999	350
HG	15356400	4059625033982	350
HG	15356600	4059625033975	350
HG	15357000	4059625033968	351
HG	15357400	4059625033951	351
HG	15357600	4059625033944	351
HG	15358000	4059625033937	351
HG	15358400	4059625033920	351
HG	15358600	4059625033913	351
HG	15380000	4059625201350	348
HG	15380140	4059625241707	348
HG	15380340	4059625241691	348
HG	15380670	4059625241684	348
HG	15380700	4059625201336	348
HG	15380990	4059625241677	348
HG	15381000	4059625201312	348
HG	15381140	4059625489130	348
HG	15381340	4059625489123	348
HG	15381670	4059625489116	348
HG	15381700	4059625201299	348
HG	15381990	4059625489109	348
HG	15382000	4059625201275	349
HG	15382140	4059625241967	349
HG	15382340	4059625241974	349
HG	15382670	4059625241981	349
HG	15382700	4059625201251	349
HG	15382990	4059625241998	349
HG	15384000	4059625201237	349

brand	Code no.	EAN	page
HG	15384140	4059625489093	349
HG	15384340	4059625489086	349
HG	15384670	4059625489079	349
HG	15384700	4059625201213	349
HG	15384990	4059625489062	349
HG	15553000	4059625464878	352
HG	15553140	4059625464854	352
HG	15553340	4059625464830	352
HG	15553670	4059625465165	352
HG	15553700	4059625465141	352
HG	15554000	4059625465127	353
HG	15554140	4059625465097	353
HG	15554340	4059625465073	353
HG	15554670	4059625465059	353
HG	15554700	4059625465028	353
HG	15556000	4059625464991	353
HG	15556140	4059625464984	353
HG	15556340	4059625464977	353
HG	15556670	4059625465363	353
HG	15556700	4059625465356	353
HG	15558000	4059625465349	355
HG	15558140	4059625465325	355
HG	15558340	4059625465301	355
HG	15558670	4059625465288	355
HG	15558700	4059625465264	355
HG	15559000	4059625465240	353
HG	15559140	4059625465226	353
HG	15559340	4059625465202	353
HG	15559670	4059625465189	353
HG	15559700	4059625465561	353
HG	15562000	4059625465547	354
HG	15562140	4059625465523	354
HG	15562340	4059625465509	354
HG	15562670	4059625465486	354
HG	15562700	4059625465462	354
HG	15571000	4059625465448	356
HG	15571140	4059625465417	356
HG	15571340	4059625465387	356
HG	15571670	4059625465752	356
HG	15571700	4059625465721	356
HG	15572000	4059625465684	357
HG	15572140	4059625465653	357
HG	15572340	4059625465622	357
HG	15572670	4059625465592	357
HG	15572700	4059625465967	357
HG	15573000	4059625465929	359
HG	15573140	4059625465899	359
HG	15573340	4059625465868	359
HG	15573670	4059625465837	359
HG	15573700	4059625465806	359
HG	15574000	4059625466162	357
HG	15574140	4059625466131	357
HG	15574340	4059625466100	357
HG	15574670	4059625466070	357
HG	15574700	4059625466049	357
HG	15575000	4059625466001	358
HG	15575140	4059625465974	358
HG	15575340	4059625466346	358
HG	15575670	4059625466315	358
HG	15575700	4059625466285	358

brand	Code no.	EAN	page
HG	15578000	4059625466247	357
HG	15578140	4059625466230	357
HG	15578340	4059625466223	357
HG	15578670	4059625466216	357
HG	15578700	4059625466209	357
HG	15581000	4059625466193	360
HG	15581140	4059625466179	360
HG	15581340	4059625466766	360
HG	15581670	4059625466759	360
HG	15581700	4059625466735	360
HG	15583000	4059625466711	361
HG	15583140	4059625466698	361
HG	15583340	4059625466681	361
HG	15583670	4059625466674	361
HG	15583700	4059625466650	361
HG	15586000	4059625466636	361
HG	15586140	4059625466629	361
HG	15586340	4059625466612	361
HG	15586670	4059625466605	361
HG	15586700	4059625466599	361
HG	15587000	4059625466582	363
HG	15587140	4059625466568	363
HG	15587340	4059625466551	363
HG	15587670	4059625466544	363
HG	15587700	4059625466520	363
HG	15588000	4059625466506	361
HG	15588140	4059625466483	361
HG	15588340	4059625466476	361
HG	15588670	4059625466469	361
HG	15588700	4059625466445	361
HG	15589000	4059625466421	362
HG	15589140	4059625466407	362
HG	15589340	4059625466391	362
HG	15589670	4059625466384	362
HG	15589700	4059625467145	362
HG	15705000	4011097741727	384
HG	15706000	4011097741710	385
HG	15707000	4011097741703	384
HG	15708000	4011097741697	384
HG	15712000	4059625028728	383
HG	15714000	4059625028735	383
HG	15714140	4059625230244	383
HG	15714340	4059625230251	383
HG	15714670	4059625230268	383
HG	15714700	4059625230275	383
HG	15714990	4059625230282	383
HG	15734400	4011097777528	364
HG	15735400	4011097777511	365
HG	15736400	4011097777504	366
HG	15737400	4011097777498	364
HG	15738400	4011097777481	364
HG	15741000	4011097741369	374
HG	15742000	4011097741352	375
HG	15743000	4011097741345	374
HG	15743140	4059625142424	374
HG	15743340	4059625244548	374
HG	15743670	4059625266069	374
HG	15743700	4059625266076	374
HG	15743990	4059625266083	374
HG	15744000	4011097741338	373

brand	Code no.	EAN	page
HG	15745000	4011097741321	375
HG	15747000	4011097746388	376
HG	15748000	4011097749631	376
HG	15755000	4011097741680	380
HG	15756000	4011097741673	380
HG	15757000	4011097741666	379
HG	15758000	4011097741659	379
HG	15758140	4059625155028	379
HG	15758340	4059625216682	379
HG	15758670	4059625266038	379
HG	15758700	4059625266045	379
HG	15758990	4059625266052	379
HG	15760000	4011097719870	370
HG	15760140	4059625355893	370
HG	15760340	4059625355879	370
HG	15760670	4059625355855	370
HG	15760700	4059625355831	370
HG	15760990	4059625355817	370
HG	15761000	4011097719863	371
HG	15762000	4011097719856	368
HG	15763000	4011097719849	368
HG	15763140	4059625230299	368
HG	15763340	4059625230909	368
HG	15763670	4059625230916	368
HG	15763700	4059625230923	368
HG	15763990	4059625230930	368
HG	15764000	4011097719832	372
HG	15764140	4059625355794	372
HG	15764340	4059625355770	372
HG	15764670	4059625355756	372
HG	15764700	4059625355732	372
HG	15764990	4059625355718	372
HG	15765000	4011097719825	369
HG	15767000	4011097746364	373
HG	15768000	4011097749624	373
HG	15773000	4059625196076	331
HG	15774000	4059625196069	332
HG	15930180	4011097345239	411
HG	15932000	4011097487984	381
HG	15956000	4011097629360	400
HG	15970180	4011097345208	412
HG	15972000	4011097487960	381
HG	15973180	4011097345215	411
HG	15974180	4011097345222	412
HG	15981180	4011097415772	410
24			
HG	24001400	4011097772219	171
HG	24003400	4011097771243	172
HG	24005400	4011097771366	172
HG	24007400	4011097771397	172
HG	24010180	4011097771175	413
HG	24011400	4011097772226	171
HG	24100000	4059625315897	64
HG	24100670	4059625316016	64
HG	24100700	4059625316009	64
HG	24101000	4059625320556	64
HG	24101670	4059625320570	64
HG	24101700	4059625320563	64
HG	24110000	4059625310915	64
HG	24110140	4059625442647	64

Code Numbers (HG = hansgrohe, AX = AXOR)

brand	Code no.	EAN	page
HG	24110670	4059625313046	64
HG	24110700	4059625313039	64
HG	24111000	4059625310922	64
HG	24111140	4059625442654	64
HG	24111670	4059625338773	64
HG	24111700	4059625338766	64
HG	24120000	4059625316023	64
HG	24120670	4059625316047	64
HG	24120700	4059625316030	64
HG	24121000	4059625320587	64
HG	24121670	4059625320600	64
HG	24121700	4059625320594	64
HG	24125000	4059625468043	65
HG	24125140	4059625468012	65
HG	24125340	4059625604359	65
HG	24125670	4059625468005	65
HG	24125700	4059625467978	65
HG	24125990	4059625604342	65
HG	24126000	4059625467947	65
HG	24126140	4059625467923	65
HG	24126340	4059625604335	65
HG	24126670	4059625467916	65
HG	24126700	4059625467893	65
HG	24126990	4059625604328	65
HG	24130000	4059625313718	188
HG	24130140	4059625442661	188
HG	24130670	4059625313732	188
HG	24130700	4059625313725	188
HG	24132000	4059625316894	188
HG	24132140	4059625604311	188
HG	24132670	4059625317013	188
HG	24132700	4059625317006	188
HG	24139000	4059625340974	201
HG	24139140	4059625448298	201
HG	24139670	4059625340998	201
HG	24139700	4059625340981	201
HG	24140000	4059625340073	187
HG	24140140	4059625453377	187
HG	24140670	4059625340097	187
HG	24140700	4059625340080	187
HG	24141000	4059625340707	187
HG	24141140	4059625453384	187
HG	24141670	4059625340721	187
HG	24141700	4059625340714	187
HG	24149000	4059625341063	201
HG	24149140	4059625453391	201
HG	24149670	4059625341087	201
HG	24149700	4059625341070	201
HG	24150000	4059625340851	186
HG	24150670	4059625340875	186
HG	24150700	4059625340868	186
HG	24151000	4059625340882	186
HG	24151670	4059625340905	186
HG	24151700	4059625340899	186
HG	24160000	4059625348048	91
HG	24160670	4059625358214	91
HG	24160700	4059625358221	91
HG	24161000	4059625348031	91
HG	24161670	4059625358238	91
HG	24161700	4059625358245	91

brand	Code no.	EAN	page
HG	24170000	4059625348024	91
HG	24170670	4059625358252	91
HG	24170700	4059625358269	91
HG	24171000	4059625348017	91
HG	24171670	4059625358276	91
HG	24171700	4059625358283	91
HG	24220000	4059625358375	233
HG	24220140	4059625467879	233
HG	24220670	4059625411193	233
HG	24220700	4059625411186	233
HG	24221000	4059625358290	233
HG	24221140	4059625467862	233
HG	24221670	4059625411179	233
HG	24221700	4059625411148	233
HG	24222000	4059625539200	235
HG	24222140	4059625539194	235
HG	24222670	4059625539187	235
HG	24222700	4059625539170	235
HG	24223000	4059625539163	235
HG	24223140	4059625539156	235
HG	24223670	4059625539149	235
HG	24223700	4059625539132	235
HG	24230000	4059625358306	234
HG	24232000	4059625552001	237
HG	24236000	4059625539125	236
HG	24236140	4059625539118	236
HG	24236670	4059625539101	236
HG	24236700	4059625539095	236
HG	24237000	4059625539088	236
HG	24237140	4059625539071	236
HG	24237670	4059625539064	236
HG	24237700	4059625539057	236
HG	24240000	4059625358313	232
HG	24240140	4059625467855	232
HG	24240670	4059625358320	232
HG	24240700	4059625358337	232
HG	24241000	4059625358344	232
HG	24241140	4059625467848	232
HG	24241670	4059625358351	232
HG	24241700	4059625358368	232
HG	24250670	4059625368251	664
HG	24250700	4059625368244	664
HG	24260000	4059625368268	104
HG	24261000	4059625536759	102
HG	24261670	4059625536742	102
HG	24262000	4059625536735	102
HG	24262670	4059625536728	102
HG	24270000	4059625368275	104
HG	24271000	4059625536711	103
HG	24271670	4059625536704	103
HG	24272000	4059625534496	103
HG	24272670	4059625534489	103
HG	24291670	4059625368299	664
HG	24291700	4059625368282	664
HG	24301000	4059625347928	133
HG	24301670	4059625358382	133
HG	24301700	4059625358399	133
HG	24302000	4059625347911	133
HG	24302670	4059625358405	133
HG	24302700	4059625358412	133

brand	Code no.	EAN	page
HG	24303000	4059625347904	133
HG	24303670	4059625358429	133
HG	24303700	4059625358436	133
HG	24305000	4059625604304	132
HG	24305670	4059625604298	132
HG	24305700	4059625604281	132
HG	24306000	4059625604274	133
HG	24306670	4059625604267	133
HG	24306700	4059625604250	133
HG	24307000	4059625604243	133
HG	24307670	4059625604236	133
HG	24307700	4059625604229	133
HG	24320000	4059625415375	65
HG	24320140	4059625418710	65
HG	24320340	4059625600832	65
HG	24320670	4059625415368	65
HG	24320700	4059625415351	65
HG	24320990	4059625600849	65
HG	24321000	4059625415344	65
HG	24321140	4059625418727	65
HG	24321340	4059625600856	65
HG	24321670	4059625414491	65
HG	24321700	4059625414972	65
HG	24321990	4059625600931	65
HG	24330000	4059625411094	189
HG	24330140	4059625467831	189
HG	24330670	4059625411087	189
HG	24330700	4059625411070	189
HG	24331000	4059625411063	189
HG	24331140	4059625467824	189
HG	24331670	4059625411025	189
HG	24331700	4059625410981	189
HG	24333000	4059625467800	189
HG	24333140	4059625467794	189
HG	24333670	4059625467787	189
HG	24333700	4059625467770	189
HG	24337000	4059625395264	201
HG	24337140	4059625467763	201
HG	24337670	4059625395271	201
HG	24337700	4059625395288	201
HG	24338000	4059625410790	204
HG	24338140	4059625467749	204
HG	24338670	4059625410769	204
HG	24338700	4059625410738	204
HG	24339000	4059625410707	204
HG	24339140	4059625467725	204
HG	24339670	4059625410677	204
HG	24339700	4059625410646	204
HG	24340000	4059625358443	329
HG	24340140	4059625467718	329
HG	24340670	4059625358450	329
HG	24340700	4059625358467	329
HG	24350000	4059625410615	188
HG	24350670	4059625410608	188
HG	24350700	4059625410592	188
HG	24351000	4059625410585	188
HG	24351670	4059625410561	188
HG	24351700	4059625410547	188
HG	24357000	4059625459331	202
HG	24357140	4059625459362	202

brand	Code no.	EAN	page
HG	24357670	4059625459355	202
HG	24357700	4059625459348	202
HG	24360000	4059625358474	328
HG	24360140	4059625467701	328
HG	24360670	4059625358481	328
HG	24360700	4059625358498	328
HG	24370000	4059625445211	92
HG	24370670	4059625445235	92
HG	24370700	4059625445228	92
HG	24371000	4059625445259	92
HG	24371670	4059625445273	92
HG	24371700	4059625445266	92
HG	24372000	4059625460931	90
HG	24372670	4059625460917	90
HG	24372700	4059625460894	90
HG	24373000	4059625460870	90
HG	24373670	4059625460849	90
HG	24373700	4059625460818	90
HG	24380000	4059625444603	92
HG	24380670	4059625444610	92
HG	24380700	4059625445242	92
HG	24381000	4059625445280	92
HG	24381670	4059625445303	92
HG	24381700	4059625445297	92
HG	24382000	4059625460788	90
HG	24382670	4059625460771	90
HG	24382700	4059625460764	90
HG	24383000	4059625460757	90
HG	24383670	4059625460740	90
HG	24383700	4059625460733	90
HG	24400000	4059625347799	118
HG	24400670	4059625489055	118
HG	24400700	4059625489048	118
HG	24401000	4059625347782	118
HG	24401670	4059625489031	118
HG	24401700	4059625489024	118
HG	24402000	4059625460726	116
HG	24402140	4059625460702	116
HG	24402670	4059625460696	116
HG	24402700	4059625460672	116
HG	24403000	4059625445136	115
HG	24403140	4059625445167	115
HG	24403670	4059625445150	115
HG	24403700	4059625445143	115
HG	24404000	4059625445174	115
HG	24404140	4059625445204	115
HG	24404670	4059625445198	115
HG	24404700	4059625445181	115
HG	24405000	4059625460658	116
HG	24405140	4059625460634	116
HG	24405670	4059625460627	116
HG	24405700	4059625460603	116
26			
HG	26014000	4059625136621	61
HG	26014140	4059625346907	61
HG	26014340	4059625346914	61
HG	26014670	4059625346921	61
HG	26014700	4059625346938	61
HG	26014990	4059625346945	61
HG	26077210	4059625478981	63

Code Numbers (HG = hansgrohe, AX = AXOR)

brand	Code no.	EAN	page
HG	26079000	4059625315125	259
HG	26089000	4059625315101	258
HG	26089670	4059625338667	258
HG	26090000	4059625299142	69
HG	26093000	4059625302514	197
HG	26094000	4059625302507	198
HG	26095000	4059625302491	197
HG	26096000	4059625302484	199
HG	26097000	4059625314791	261
HG	26097670	4059625338650	261
HG	26098000	4059625314784	262
HG	26099000	4059625314777	260
HG	26099670	4059625338643	260
HG	26220000	4011097790992	192
HG	26220140	4059625264126	192
HG	26220340	4059625264102	192
HG	26220670	4059625264089	192
HG	26220700	4059625264096	192
HG	26220990	4059625264119	192
HG	26221000	4011097791104	192
HG	26221140	4059625203798	192
HG	26221340	4059625217030	192
HG	26221670	4059625264058	192
HG	26221700	4059625264065	192
HG	26221990	4059625264072	192
HG	26226000	4059625201084	169
HG	26226140	4059625602232	169
HG	26226340	4059625602249	169
HG	26226670	4059625602256	169
HG	26226700	4059625201077	169
HG	26226990	4059625602263	169
HG	26227000	4059625200780	169
HG	26227140	4059625602287	169
HG	26227340	4059625603109	169
HG	26227670	4059625602294	169
HG	26227700	4059625200797	169
HG	26227990	4059625602270	169
HG	26228000	4059625201565	170
HG	26228140	4059625264775	170
HG	26228340	4059625264751	170
HG	26228670	4059625264744	170
HG	26228700	4059625201558	170
HG	26228990	4059625264768	170
HG	26229000	4059625200902	170
HG	26229140	4059625264812	170
HG	26229340	4059625264799	170
HG	26229670	4059625264782	170
HG	26229700	4059625200919	170
HG	26229990	4059625264805	170
HG	26230000	4059625200926	169
HG	26230140	4059625264737	169
HG	26230340	4059625264713	169
HG	26230670	4059625264706	169
HG	26230700	4059625201541	169
HG	26230990	4059625264720	169
HG	26231000	4059625201534	170
HG	26231140	4059625264898	170
HG	26231340	4059625264874	170
HG	26231670	4059625264867	170
HG	26231700	4059625201527	170

brand	Code no.	EAN	page
HG	26231990	4059625264881	170
HG	26232000	4059625201510	168
HG	26232140	4059625603345	168
HG	26232340	4059625603352	168
HG	26232670	4059625603369	168
HG	26232700	4059625201503	168
HG	26232990	4059625603376	168
HG	26233000	4059625201497	168
HG	26233140	4059625603383	168
HG	26233340	4059625603390	168
HG	26233670	4059625603406	168
HG	26233700	4059625201480	168
HG	26233990	4059625603413	168
HG	26234000	4059625201473	168
HG	26234140	4059625264850	168
HG	26234340	4059625264836	168
HG	26234670	4059625264829	168
HG	26234700	4059625201466	168
HG	26234990	4059625264843	168
HG	26238000	4011097853420	182
HG	26238140	4059625230718	182
HG	26238340	4059625230725	182
HG	26238670	4059625230732	182
HG	26238700	4059625230749	182
HG	26238990	4059625230756	182
HG	26239000	4011097975658	182
HG	26239140	4059625604212	182
HG	26239340	4059625328835	182
HG	26239670	4059625604205	182
HG	26239700	4059625604199	182
HG	26239990	4059625604182	182
HG	26243000	4059625201435	207
HG	26243140	4059625442982	207
HG	26243340	4059625442975	207
HG	26243670	4059625442968	207
HG	26243700	4059625201428	207
HG	26243990	4059625454329	207
HG	26250000	4011097853413	183
HG	26250140	4059625191934	183
HG	26250340	4059625230763	183
HG	26250670	4059625230770	183
HG	26250700	4059625230787	183
HG	26250990	4059625230794	183
HG	26251000	4011097975665	182
HG	26251140	4059625357576	182
HG	26251340	4059625604175	182
HG	26251670	4059625604168	182
HG	26251700	4059625604151	182
HG	26251990	4059625604144	182
HG	26252000	4011097975672	183
HG	26252140	4059625604137	183
HG	26252340	4059625604120	183
HG	26252670	4059625604113	183
HG	26252700	4059625604106	183
HG	26252990	4059625604090	183
HG	26253000	4011097975689	183
HG	26253140	4059625604083	183
HG	26253340	4059625604076	183
HG	26253670	4059625604069	183
HG	26253700	4059625604052	183

brand	Code no.	EAN	page
HG	26253990	4059625604045	183
HG	26254180	4011097975696	414
HG	26257000	4059625196106	191
HG	26258000	4059625196090	191
HG	26271000	4059625302170	197
HG	26271670	4059625339121	197
HG	26272000	4059625328934	260
HG	26272670	4059625330067	260
HG	26274000	4059625328941	259
HG	26276000	4059625314760	258
HG	26276670	4059625339084	258
HG	26277000	4059625302163	197
HG	26277670	4059625339077	197
HG	26278000	4059625325582	136
HG	26279000	4059625333235	98
HG	26281000	4059625302156	198
HG	26281670	4059625339053	198
HG	26282000	4059625315873	263
HG	26282670	4059625339039	263
HG	26283000	4059625302149	198
HG	26283670	4059625339022	198
HG	26284000	4059625328958	262
HG	26286000	4059625314753	261
HG	26286670	4059625330074	261
HG	26289000	4059625339015	263
HG	26289670	4059625339008	263
HG	26318000	4059625338995	258
HG	26319000	4059625338988	261
HG	26320000	4011097804330	86
HG	26322000	4011097804316	86
HG	26322400	4011097787855	86
HG	26323000	4011097804309	86
HG	26324000	4011097804293	85
HG	26326000	4011097804279	85
HG	26328400	4011097787794	87
HG	26329000	4011097787787	87
HG	26332400	4011097780665	68
HG	26333400	4011097780658	68
HG	26334400	4011097780641	68
HG	26336400	4011097792064	68
HG	26340000	4059625299128	70
HG	26340670	4059625338971	70
HG	26371000	4059625338964	100
HG	26401000	4011097804255	123
HG	26402000	4011097804248	123
HG	26403400	4011097804231	122
HG	26404400	4011097804224	122
HG	26405000	4059625316351	204
HG	26405670	4059625326589	204
HG	26406000	4059625316344	206
HG	26406670	4059625326565	206
HG	26407000	4059625316337	206
HG	26407670	4059625326541	206
HG	26411400	4011097744865	133
HG	26413400	4011097760292	134
HG	26421400	4011097757018	133
HG	26423670	4059625365816	99
HG	26424400	4011097757049	134
HG	26425400	4011097757032	134
HG	26426670	4059625425626	258

brand	Code no.	EAN	page
HG	26427670	4059625425596	261
HG	26428670	4059625425565	258
HG	26429670	4059625425558	261
HG	26442000	4011097705941	176
HG	26443000	4011097705958	176
HG	26453000	4011097756868	146
HG	26453140	4059625142448	146
HG	26453340	4059625308509	146
HG	26453670	4059625308523	146
HG	26453700	4059625308516	146
HG	26453990	4059625308530	146
HG	26455000	4011097756851	146
HG	26455140	4011097837291	146
HG	26455340	4011097837284	146
HG	26455670	4059625230947	146
HG	26455700	4059625230954	146
HG	26455990	4011097837390	146
HG	26456000	4011097814803	144
HG	26456400	4011097786902	144
HG	26457000	4011097756875	147
HG	26457140	4011097891873	147
HG	26457340	4011097891866	147
HG	26457670	4059625304778	147
HG	26457700	4059625304761	147
HG	26457990	4011097891972	147
HG	26464000	4011097689678	192
HG	26465000	4011097689685	192
HG	26466000	4011097720562	176
HG	26466400	4011097720555	176
HG	26467000	4011097720548	177
HG	26469000	4011097720524	177
HG	26470000	4011097720500	176
HG	26471180	4011097718637	415
HG	26472000	4011097718620	184
HG	26481000	4011097718613	184
HG	26505000	4011097773810	119
HG	26506000	4011097773803	119
HG	26511000	4011097857046	123
HG	26511400	4011097857039	123
HG	26511600	4011097961286	123
HG	26515000	4059625326763	61
HG	26515140	4059625604038	61
HG	26515340	4059625604021	61
HG	26515670	4059625604014	61
HG	26515700	4059625604007	61
HG	26515990	4059625603994	61
HG	26516000	4059625326770	61
HG	26516140	4059625603987	61
HG	26516340	4059625603970	61
HG	26516670	4059625603963	61
HG	26516700	4059625603956	61
HG	26516990	4059625603949	61
HG	26519000	4011097693200	124
HG	26520000	4011097706047	63
HG	26520140	4059625230824	63
HG	26520340	4059625221297	63
HG	26520400	4011097706085	63
HG	26520670	4059625230817	63
HG	26520700	4059625230800	63
HG	26520990	4059625230961	63

Code Numbers (HG = hansgrohe, AX = AXOR)

brand	Code no.	EAN	page
HG	26521000	4011097706054	62
HG	26521400	4011097706092	62
HG	26523000	4011097741970	190
HG	26528000	4011097752068	190
HG	26528400	4011097752075	190
HG	26530000	4011097706764	62
HG	26530140	4059625264027	62
HG	26530340	4059625264010	62
HG	26530400	4011097726663	62
HG	26530670	4059625263990	62
HG	26530700	4059625264003	62
HG	26530990	4059625026830	62
HG	26531000	4011097719115	61
HG	26531140	4059625265925	61
HG	26531340	4059625265901	61
HG	26531400	4011097726946	61
HG	26531670	4059625265888	61
HG	26531700	4059625265895	61
HG	26531990	4059625265918	61
HG	26534400	4011097792033	96
HG	26535400	4011097792026	96
HG	26538400	4011097791999	96
HG	26539400	4011097791982	96
HG	26553400	4011097791975	96
HG	26554400	4011097791968	96
HG	26555400	4011097791951	96
HG	26560400	4011097744858	93
HG	26561400	4011097736228	93
HG	26562400	4011097744841	93
HG	26563400	4011097736433	93
HG	26564400	4011097744834	93
HG	26566400	4011097767048	93
HG	26568400	4011097791937	135
HG	26569400	4011097791920	135
HG	26571400	4011097736419	93
HG	26573400	4011097736402	93
HG	26574400	4011097744803	93
HG	26581400	4011097736389	94
HG	26582400	4011097753904	94
HG	26583400	4011097736372	94
HG	26584400	4011097753898	94
HG	26590400	4011097753881	94
HG	26591400	4011097736358	94
HG	26593400	4011097736341	94
HG	26594400	4011097753843	94
HG	26600000	4011097754369	178
HG	26601000	4011097754826	177
HG	26604000	4011097754383	184
HG	26605000	4011097754390	181
HG	26606000	4011097761619	199
HG	26620000	4011097706061	88
HG	26620400	4011097706078	88
HG	26621000	4011097706306	88
HG	26621400	4011097706313	88
HG	26622000	4011097711799	88
HG	26622400	4011097712000	88
HG	26623000	4011097712017	88
HG	26623400	4011097712024	88
HG	26630000	4011097719108	84
HG	26630400	4011097726953	84

brand	Code no.	EAN	page
HG	26631000	4011097719092	84
HG	26631400	4011097726960	84
HG	26632000	4011097719085	84
HG	26633000	4011097719078	84
HG	26640540	4059625301951	71
HG	26640560	4059625301944	71
HG	26640670	4059625301937	71
HG	26640700	4059625301920	71
HG	26693400	4011097791883	135
HG	26694400	4011097791876	135
HG	26700000	4011097808741	132
HG	26701000	4011097808727	131
HG	26720000	4011097758107	132
HG	26720400	4011097758114	132
HG	26721000	4011097758121	131
HG	26721400	4011097758138	131
HG	26722000	4011097770987	196
HG	26723000	4011097770970	194
HG	26723670	4059625413296	194
HG	26724000	4011097770963	194
HG	26724670	4059625413289	194
HG	26725000	4011097770956	194
HG	26726000	4011097770949	195
HG	26726670	4059625413265	195
HG	26727000	4011097770932	195
HG	26727670	4059625413258	195
HG	26790000	4011097801711	238
HG	26791000	4011097801704	240
HG	26792000	4011097801698	239
HG	26793000	4011097806280	241
HG	26794000	4011097806297	238
HG	26800400	4011097744599	66
HG	26801400	4011097736273	66
HG	26802400	4011097744582	66
HG	26803400	4011097736266	66
HG	26804400	4011097744575	66
HG	26805400	4011097736327	66
HG	26806400	4011097752037	66
HG	26810400	4011097750026	67
HG	26811400	4011097736259	67
HG	26812400	4011097750033	67
HG	26813400	4011097736242	67
HG	26815340	4059625346679	67
HG	26815400	4011097736235	67
HG	26815670	4059625346648	67
HG	26815700	4059625346655	67
HG	26815990	4059625346686	67
HG	26816400	4011097752136	67
HG	26843000	4059625201411	143
HG	26843140	4059625442951	143
HG	26843340	4059625442944	143
HG	26843670	4059625442937	143
HG	26843700	4059625201404	143
HG	26843990	4059625454336	143
HG	26844000	4059625201398	647
HG	26844140	4059625442920	647
HG	26844340	4059625442913	647
HG	26844670	4059625442906	647
HG	26844700	4059625201381	647
HG	26844990	4059625452240	647

brand	Code no.	EAN	page
HG	26851000	4059625216095	130
HG	26851700	4059625216408	130
HG	26852000	4059625216415	130
HG	26852700	4059625216422	130
HG	26853000	4059625468616	223
HG	26853670	4059625468609	223
HG	26853700	4059625468593	223
HG	26856000	4059625216439	130
HG	26856700	4059625216446	130
HG	26857000	4059625216453	131
HG	26857700	4059625216460	131
HG	26858000	4059625201374	143
HG	26858140	4059625442692	143
HG	26858340	4059625442685	143
HG	26858670	4059625442678	143
HG	26858700	4059625201367	143
HG	26858990	4059625452295	143
HG	26864000	4059625189696	59
HG	26864140	4059625264935	59
HG	26864340	4059625264911	59
HG	26864670	4059625264904	59
HG	26864700	4059625189702	59
HG	26864990	4059625264928	59
HG	26865000	4059625198544	59
HG	26865140	4059625264973	59
HG	26865340	4059625264959	59
HG	26865670	4059625264942	59
HG	26865700	4059625198575	59
HG	26865990	4059625264966	59
HG	26866000	4059625213407	60
HG	26866140	4059625265710	60
HG	26866340	4059625265673	60
HG	26866670	4059625264980	60
HG	26866700	4059625220054	60
HG	26866990	4059625265703	60
HG	26867000	4059625220085	60
HG	26867140	4059625265758	60
HG	26867340	4059625265734	60
HG	26867670	4059625265727	60
HG	26867700	4059625220092	60
HG	26867990	4059625265741	60
HG	26887000	4059625433393	145
HG	26887140	4059625433362	145
HG	26887340	4059625433331	145
HG	26887670	4059625433300	145
HG	26887700	4059625433270	145
HG	26887990	4059625444221	145
HG	26888000	4059625433249	144
HG	26888140	4059625433218	144
HG	26888340	4059625433188	144
HG	26888670	4059625433157	144
HG	26888700	4059625433126	144
HG	26888990	4059625444238	144
HG	26889000	4059625433096	144
HG	26889140	4059625433065	144
HG	26889340	4059625433034	144
HG	26889670	4059625433003	144
HG	26889700	4059625431276	144
HG	26889990	4059625443286	144
HG	26890140	4059625265970	238

brand	Code no.	EAN	page
HG	26890340	4059625265956	238
HG	26890670	4059625265932	238
HG	26890700	4059625265949	238
HG	26890990	4059625265963	238
HG	26891140	4059625266021	238
HG	26891340	4059625266007	238
HG	26891670	4059625265987	238
HG	26891700	4059625265994	238
HG	26891990	4059625266014	238
HG	26899670	4059625425541	259
HG	26900670	4059625425510	262
HG	26957000	4059625508879	109
HG	26958670	4059625508886	109
HG	26960000	4059625508893	110
27			
HG	27008400	4011097662251	264
HG	27013400	4011097745152	105
HG	27014400	4011097745169	105
HG	27038000	4011097727936	101
HG	27038400	4011097727943	101
HG	27039000	4011097727950	101
HG	27039400	4011097727967	101
HG	27081400	4011097755243	107
HG	27082400	4011097755250	107
HG	27085000	4011097537566	108
HG	27112000	4011097679549	228
HG	27112400	4011097679556	228
HG	27113000	4011097679563	229
HG	27113400	4011097679570	229
HG	27114000	4011097679587	226
HG	27115000	4011097679594	226
HG	27116000	4011097690117	226
HG	27117000	4011097690124	226
HG	27126000	4011097716954	227
HG	27126400	4011097716947	227
HG	27127000	4011097716930	227
HG	27127400	4011097716923	227
HG	27129000	4011097718132	225
HG	27133000	4011097718118	225
HG	27185000	4011097689692	246
HG	27188000	4011097690148	246
HG	27222000	4011097690155	248
HG	27223000	4011097690162	247
HG	27224000	4011097690179	249
HG	27247400	4011097770000	242
HG	27248400	4011097770024	243
HG	27267000	4011097775944	250
HG	27268000	4011097775937	250
HG	27269000	4011097775920	252
HG	27270000	4011097775913	253
HG	27271000	4011097775906	254
HG	27281000	4011097775890	254
HG	27283000	4011097755205	227
HG	27284000	4011097775883	256
HG	27286000	4011097754246	228
HG	27286400	4011097754253	228
HG	27288000	4011097751245	230
HG	27288400	4011097751238	230
HG	27289000	4011097775876	257
HG	27294000	4011097773896	211

Code Numbers (HG = hansgrohe, AX = AXOR)

brand	Code no.	EAN	page
HG	27295000	4011097775500	211
HG	27297000	4011097775524	208
HG	27298000	4011097801681	255
HG	27320000	4011097801674	251
HG	27337000	4011097720609	177
HG	27337400	4011097720593	177
HG	27355000	4011097815732	121
HG	27356000	4011097815749	121
HG	27361000	4011097971735	231
HG	27361670	4059625603871	231
HG	27361700	4059625603864	231
HG	27362000	4011097971728	231
HG	27362670	4059625603857	231
HG	27362700	4059625603840	231
HG	27370000	4011097625126	181
HG	27371000	4011097625140	181
HG	27375000	4011097655727	181
HG	27376000	4011097691435	181
HG	27378000	4011097720586	176
HG	27378400	4011097720579	176
HG	27380000	4011097625119	184
HG	27381000	4011097625133	184
HG	27388000	4011097783253	206
HG	27389000	4011097783260	205
HG	27389140	4059625234471	205
HG	27389340	4059625234488	205
HG	27389670	4059625234495	205
HG	27389700	4059625234464	205
HG	27389990	4059625234457	205
HG	27393000	4011097769837	205
HG	27393140	4059625234518	205
HG	27393340	4059625234525	205
HG	27393670	4059625234440	205
HG	27393700	4059625234501	205
HG	27393990	4059625234532	205
HG	27405000	4011097592466	185
HG	27405090	4011097815701	185
HG	27411000	4011097112930	203
HG	27412000	4011097112947	203
HG	27412140	4011097819655	203
HG	27412250	4011097819679	203
HG	27412300	4011097819952	203
HG	27412310	4011097819686	203
HG	27412330	4011097819907	203
HG	27412340	4011097819648	203
HG	27412800	4011097405391	203
HG	27412820	4011097848730	203
HG	27412950	4011097819631	203
HG	27413000	4011097112978	202
HG	27413140	4011097819983	202
HG	27413340	4011097819976	202
HG	27413670	4059625264034	202
HG	27413700	4059625264041	202
HG	27413990	4011097820064	202
HG	27414000	4011097614083	147
HG	27424000	4011097592459	185
HG	27424090	4011097806426	185
HG	27438000	4011097113128	202
HG	27441000	4011097537580	193
HG	27443000	4011097537597	193

brand	Code no.	EAN	page
HG	27446000	4011097759746	203
HG	27454000	4011097113258	145
HG	27454140	4011097892863	145
HG	27454340	4011097892825	145
HG	27454670	4059625266090	145
HG	27454700	4059625266106	145
HG	27454990	4011097113425	145
HG	27458000	4011097113449	145
HG	27461000	4011097528205	179
HG	27463000	4011097528229	178
HG	27467000	4011097759753	206
HG	27474000	4011097413693	179
HG	27477000	4011097413709	178
HG	27478000	4011097415819	178
HG	27492000	4011097583556	177
HG	27493000	4011097563831	177
HG	27494000	4011097563824	178
HG	27505000	4011097678733	145
HG	27506000	4011097678726	146
HG	27521000	4011097157818	142
HG	27558000	4011097570228	136
HG	27559000	4011097570242	136
HG	27576000	4011097663982	136
HG	27577000	4011097663999	136
HG	27592000	4011097537436	135
HG	27594000	4011097537450	135
HG	27607000	4059625137161	179
HG	27609000	4011097626871	121
HG	27614000	4011097570167	121
HG	27615000	4011097570174	121
HG	27620000	4059625137178	178
HG	27623000	4059625137185	180
HG	27623140	4059625603833	180
HG	27623340	4059625603826	180
HG	27623670	4059625340028	180
HG	27623700	4059625340011	180
HG	27623990	4059625603819	180
HG	27630000	4059625196052	244
HG	27633000	4059625154892	225
HG	27633140	4059625230978	225
HG	27633340	4059625230985	225
HG	27633670	4059625230992	225
HG	27633700	4059625231005	225
HG	27633990	4059625231012	225
HG	27636000	4011097587448	114
HG	27640000	4011097857022	113
HG	27640400	4011097857015	113
HG	27645000	4011097857008	113
HG	27646000	4011097856988	89
HG	27648000	4011097856940	89
HG	27648400	4011097856933	89
HG	27649000	4011097856926	89
HG	27652000	4011097607139	97
HG	27654000	4059625154908	84
HG	27660000	4059625196045	244
HG	27667000	4059625154915	84
HG	27668000	4059625157077	131
HG	27669000	4059625157084	131
HG	27671000	4059625214145	84
HG	27672000	4059625214152	83

brand	Code no.	EAN	page
HG	27673000	4059625214169	83
HG	27674000	4059625214176	83
HG	27687000	4059625196038	245
HG	27694000	4059625261309	201
HG	27694140	4059625266199	201
HG	27694340	4059625266175	201
HG	27694670	4059625266168	201
HG	27694700	4059625261316	201
HG	27694990	4059625266182	201
HG	27704000	4011097710495	120
HG	27728000	4011097664859	97
HG	27729000	4011097664866	97
HG	27762000	4011097570181	97
HG	27763000	4011097570198	97
HG	27764000	4011097610221	97
HG	27766000	4011097570204	97
HG	27771000	4011097537290	95
HG	27772000	4011097537405	95
HG	27776000	4011097537528	95
HG	27804000	4059625316320	206
HG	27804670	4059625326527	206
HG	27805000	4059625316313	205
HG	27805670	4059625326503	205
HG	27809000	4059625316306	202
HG	27809670	4059625326480	202
HG	27812400	4011097803265	109
HG	27813400	4011097803272	109
HG	27833400	4059625039175	106
HG	27902670	4059625352892	657
HG	27902700	4059625353035	657
HG	27904670	4059625352885	657
HG	27904700	4059625353028	657
HG	27912670	4059625352861	657
HG	27912700	4059625353004	657
HG	27913670	4059625352854	657
HG	27913700	4059625352991	657
HG	27914670	4059625352847	658
HG	27914700	4059625352984	658
HG	27915670	4059625352830	658
HG	27915700	4059625352977	658
HG	27916670	4059625352823	659
HG	27916700	4059625352960	659
HG	27917670	4059625347331	660
HG	27917700	4059625347348	660
HG	27921670	4059625352816	661
HG	27921700	4059625352953	661
HG	27925670	4059625352809	660
HG	27925700	4059625352946	660
HG	27926670	4059625352793	659
HG	27926700	4059625352939	659
HG	27927670	4059625352786	662
HG	27927700	4059625352922	662
HG	27928670	4059625352779	661
HG	27928700	4059625352915	661
HG	27929670	4059625352762	659
HG	27929700	4059625352908	659
HG	27939670	4059625321546	210
HG	27951000	4059625341155	209
HG	27952000	4059625341179	210
HG	27953000	4059625341186	212

brand	Code no.	EAN	page
HG	27954000	4059625341193	213
HG	27958000	4059625341223	214
HG	27959670	4059625347157	209
HG	27961670	4059625347164	213
HG	27966670	4059625368398	663
HG	27966700	4059625368381	663
HG	27967670	4059625368374	662
HG	27967700	4059625368367	662
HG	27968670	4059625368350	663
HG	27968700	4059625368336	663
HG	27969670	4059625368312	663
HG	27969700	4059625368305	663
28			
HG	28010000	4059625203026	403
HG	28010140	4059625241639	403
HG	28010340	4059625241622	403
HG	28010670	4059625241615	403
HG	28010700	4059625241608	403
HG	28010990	4059625241592	403
HG	28016000	4059625206676	405
HG	28020000	4059625203002	403
HG	28020140	4059625358849	403
HG	28020340	4059625358856	403
HG	28020670	4059625310731	403
HG	28020700	4059625310748	403
HG	28020990	4059625358863	403
HG	28021000	4059625206690	405
HG	28071000	4011097115498	773
HG	28072000	4011097436920	153
HG	28132000	4011097557854	151
HG	28134000	4011097557861	151
HG	28136000	4011097557847	151
HG	28220000	4059625462850	150
HG	28220140	4059625462843	150
HG	28220340	4059625462836	150
HG	28220670	4059625462829	150
HG	28220700	4059625462812	150
HG	28221210	4059625462805	151
HG	28230000	4059625462799	150
HG	28230140	4059625462782	150
HG	28230340	4059625462775	150
HG	28230670	4059625462768	150
HG	28230700	4059625462751	150
HG	28230820	4059625462744	150
HG	28230990	4059625462737	150
HG	28240000	4059625520857	150
HG	28240140	4059625520840	150
HG	28240340	4059625520833	150
HG	28240670	4059625520826	150
HG	28240700	4059625520819	150
HG	28240990	4059625520697	150
HG	28248000	4059625024799	152
HG	28249000	4059625024782	152
HG	28250210	4059625462720	151
HG	28260000	4059625462713	150
HG	28260140	4059625462690	150
HG	28260340	4059625462676	150
HG	28260670	4059625462652	150
HG	28260700	4059625462638	150
HG	28260820	4059625462614	150

Code Numbers (HG = hansgrohe, AX = AXOR)

brand	Code no.	EAN	page
HG	28260990	4059625462607	150
HG	28262000	4011097314044	153
HG	28264000	4011097314051	153
HG	28266000	4011097260860	153
HG	28272000	4011097314013	152
HG	28272140	4011097838779	152
HG	28272310	4011097838861	152
HG	28272340	4011097838748	152
HG	28272450	4011097327099	152
HG	28272670	4059625302125	152
HG	28272700	4059625302132	152
HG	28272800	4011097411835	152
HG	28272820	4011097756011	152
HG	28272990	4011097838984	152
HG	28274000	4011097314020	152
HG	28276000	4011097314037	152
HG	28276090	4011097327143	152
HG	28276140	4011097839677	152
HG	28276250	4011097839752	152
HG	28276300	4011097839998	152
HG	28276340	4011097839639	152
HG	28276460	4011097667201	762
HG	28276610	4011097667225	762
HG	28276670	4059625231029	152
HG	28276700	4059625231036	152
HG	28276820	4011097396934	152
HG	28276840	4011097327174	152
HG	28276880	4011097327181	762
HG	28276950	4011097839592	152
HG	28276990	4011097839950	152
HG	28328000	4011097734514	143
HG	28331000	4011097487311	142
HG	28331140	4011097830452	142
HG	28331340	4011097830421	142
HG	28331670	4059625273708	142
HG	28331700	4059625273692	142
HG	28331990	4011097830698	142
HG	28346000	4011097116969	71
HG	28387000	4059625214121	142
HG	28387140	4059625231043	142
HG	28387340	4059625231050	142
HG	28387670	4059625231067	142
HG	28387700	4059625231074	142
HG	28387990	4059625231081	142
HG	28414180	4011097591766	414
HG	28417000	4011097591742	174
HG	28418000	4011097591759	173
HG	28423000	4011097570136	196
HG	28424000	4011097570143	196
HG	28425000	4011097570150	196
HG	28433000	4011097660936	175
HG	28462000	4011097607184	193
HG	28466000	4011097192437	207
HG	28467000	4011097235264	207
HG	28496000	4011097141909	200
HG	28535000	4011097537306	68
HG	28537000	4011097537269	68
HG	28561000	4011097570105	69
HG	28562000	4011097570112	69
HG	28563000	4011097570129	69

brand	Code no.	EAN	page
HG	28585000	4011097664842	69
HG	28588000	4011097679341	61
HG	28588400	4011097679358	61
HG	28631000	4011097487175	117
HG	28631140	4059625231098	117
HG	28631340	4059625229606	117
HG	28631670	4059625231104	117
HG	28631700	4059625231111	117
HG	28631820	4011097499574	117
HG	28631990	4059625231128	117
HG	28632000	4011097487199	117
HG	28632140	4059625231135	117
HG	28632340	4059625231142	117
HG	28632670	4059625231159	117
HG	28632700	4059625231166	117
HG	28632990	4059625231173	117
HG	28650000	4011097118789	762
HG	28672000	4011097118833	763
HG	28678000	4011097537283	124
HG	28679000	4011097487557	124
HG	28728000	4059625603741	62
HG	28728140	4059625603734	62
HG	28728340	4059625603727	62
HG	28728670	4059625603710	62
HG	28728700	4059625603703	62
HG	28728990	4059625603697	62
HG	28729000	4059625603680	62
HG	28729140	4059625603673	62
HG	28729340	4059625603666	62
HG	28729670	4059625603659	62
HG	28729700	4059625603642	62
HG	28729990	4059625603635	62
HG	28742000	4059625489017	223
HG	28742670	4059625489000	223
HG	28742700	4059625488997	223
HG	28743000	4059625488980	82
HG	28743140	4059625488973	82
HG	28743340	4059625488966	82
HG	28743670	4059625488959	82
HG	28743700	4059625488942	82
HG	28743990	4059625488935	82
HG	28744000	4059625488928	82
HG	28744140	4059625488911	82
HG	28744340	4059625488904	82
HG	28744670	4059625488898	82
HG	28744700	4059625488881	82
HG	28744990	4059625488874	82
HG	28745000	4059625488867	83
HG	28745140	4059625488850	83
HG	28745340	4059625488843	83
HG	28745670	4059625488836	83
HG	28745700	4059625488829	83
HG	28745990	4059625488812	83
HG	28746000	4059625488805	82
HG	28746140	4059625487990	82
HG	28746340	4059625487983	82
HG	28746670	4059625487976	82
HG	28746700	4059625487969	82
HG	28746990	4059625487952	82
HG	28760210	4059625361337	70

brand	Code no.	EAN	page
HG	28787640	4059625361351	70
HG	28788570	4059625361375	70
HG	28821000	4059625603628	180
HG	28821140	4059625603611	180
HG	28821340	4059625603604	180
HG	28821670	4059625603598	180
HG	28821700	4059625603581	180
HG	28821990	4059625603574	180
HG	28911210	4059625479407	654
HG	28912210	4059625479414	654
HG	28913210	4059625479421	655
HG	28915210	4059625479445	655
HG	28916210	4059625479452	656
HG	28917210	4059625479469	655
HG	28918210	4059625479476	656
29			
HG	29230000	4059625404348	137
HG	29230140	4059625554265	137
HG	29230340	4059625554258	137
HG	29230670	4059625404379	137
HG	29230700	4059625404355	137
HG	29230990	4059625554241	137
HG	29231000	4059625404393	137
HG	29231140	4059625554234	137
HG	29231340	4059625554227	137
HG	29231670	4059625405932	137
HG	29231700	4059625405918	137
HG	29231990	4059625554777	137
HG	29232000	4059625405956	138
HG	29232140	4059625406052	138
HG	29232340	4059625406014	138
HG	29232670	4059625405970	138
HG	29232700	4059625405994	138
HG	29232990	4059625406038	138
HG	29233000	4059625406076	138
HG	29233140	4059625406175	138
HG	29233340	4059625406137	138
HG	29233670	4059625406090	138
HG	29233700	4059625406113	138
HG	29233990	4059625406151	138
HG	29234000	4059625406199	139
HG	29235180	4059625406212	415
HG	29238000	4059625554333	139
HG	29238140	4059625554326	139
HG	29238340	4059625554319	139
HG	29238670	4059625554302	139
HG	29238700	4059625554296	139
HG	29238990	4059625554289	139
HG	29239180	4059625554272	415
HG	29338000	4059625599150	140
HG	29338140	4059625600009	140
HG	29338340	4059625599198	140
HG	29338670	4059625599181	140
HG	29338700	4059625599174	140
HG	29338990	4059625599167	140
31			
HG	31074000	4011097660950	447
HG	31080000	4011097660967	446
HG	31081000	4011097660974	448
HG	31082000	4011097660981	447

brand	Code no.	EAN	page
HG	31084000	4011097661001	446
HG	31085000	4011097661018	449
HG	31086000	4011097661025	449
HG	31087000	4011097651231	448
HG	31088000	4011097661032	446
HG	31100000	4011097519210	616
HG	31101000	4011097519227	616
HG	31102000	4011097519234	616
HG	31103000	4011097519241	616
HG	31121000	4011097691527	446
HG	31130000	4011097679396	529
HG	31132000	4011097678030	527
HG	31166000	4011097661049	448
HG	31171000	4011097679112	531
HG	31172000	4011097679129	531
HG	31173000	4011097679136	531
HG	31174000	4011097679143	531
HG	31183000	4011097661056	446
HG	31184000	4011097692319	447
HG	31185000	4011097705149	446
HG	31186000	4011097710402	446
HG	31187000	4011097674056	448
HG	31190000	4011097661063	452
HG	31203000	4011097719337	447
HG	31204000	4011097719320	447
HG	31251000	4011097718590	449
HG	31280000	4011097661070	450
HG	31442000	4011097661100	453
HG	31451000	4011097748450	451
HG	31454000	4011097748443	451
HG	31456000	4011097748467	454
HG	31471000	4011097760667	450
HG	31480000	4011097656687	451
HG	31487000	4011097661124	451
HG	31493000	4011097661131	451
HG	31494000	4011097661148	452
HG	31509000	4011097755847	526
HG	31513000	4011097719313	527
HG	31517000	4011097679402	526
HG	31518000	4011097679419	526
HG	31519000	4011097679426	529
HG	31531000	4011097795201	526
HG	31532000	4011097795218	526
HG	31539000	4011097734026	526
HG	31603000	4011097719306	527
HG	31604000	4011097706160	526
HG	31607000	4011097679433	526
HG	31608000	4011097679440	526
HG	31609000	4011097679457	529
HG	31621000	4011097691510	526
HG	31652000	4011097708584	454
HG	31657000	4011097696089	528
HG	31658000	4011097696096	528
HG	31677000	4011097665290	382
HG	31677140	4059625281765	382
HG	31677340	4059625539620	382
HG	31677670	4059625549926	382
HG	31677700	4059625557709	382
HG	31677990	4059625170397	382
HG	31680000	4011097656694	453

Code Numbers (HG = hansgrohe, AX = AXOR)

brand	Code no.	EAN	page
HG	31685000	4011097661155	454
HG	31730000	4011097590769	526
HG	31732000	4011097602424	526
HG	31733000	4011097590783	526
HG	31741180	4011097477237	409
HG	31803000	4011097641881	705
HG	31804000	4011097641898	705
HG	31806000	4011097641904	704
HG	31806800	4011097654829	704
HG	31815000	4011097718187	701
HG	31815670	4059625231180	701
HG	31815800	4011097718309	701
HG	31816000	4011097646312	704
HG	31817000	4011097718194	702
HG	31817670	4059625231197	702
HG	31817800	4011097726717	702
HG	31820000	4011097679464	702
HG	31820670	4059625231203	702
HG	31820800	4011097679471	702
HG	31821000	4059625196700	702
HG	31821800	4059625197974	702
HG	31822000	4011097679488	703
HG	31823000	4011097708027	703
HG	31825000	4011097708041	706
HG	31826000	4059625196694	704
HG	31827000	4059625196786	702
HG	31833000	4059625196717	701
HG	31910000	4011097725819	528
HG	31911000	4011097725833	528
HG	31913000	4011097725864	531
HG	31914000	4011097757421	528
HG	31915000	4011097757438	528
HG	31916000	4011097725857	538
HG	31917000	4011097757445	528
HG	31920000	4011097591506	532
HG	31922000	4011097706177	532
HG	31923000	4011097766072	530
HG	31926000	4011097646688	532
HG	31927000	4011097728544	532
HG	31928000	4011097646329	533
HG	31930000	4011097629889	535
HG	31931000	4011097629896	536
HG	31937000	4011097689739	530
HG	31938000	4011097646336	536
HG	31940000	4011097591520	533
HG	31945000	4011097602523	534
HG	31946000	4011097602547	534
HG	31947000	4011097602561	535
HG	31948000	4011097646343	534
HG	31952000	4011097719283	527
HG	31960000	4011097591544	537
HG	31961000	4059625194195	540
HG	31964000	4011097708560	539
HG	31965000	4011097602615	538
HG	31968000	4011097646350	537
32			
HG	32500000	4011097812786	432
HG	32500140	4059625229286	432
HG	32500340	4059625229293	432
HG	32500670	4059625231210	432

brand	Code no.	EAN	page
HG	32500700	4059625231227	432
HG	32500990	4059625229309	432
HG	32501000	4011097812762	434
HG	32503000	4011097812724	433
HG	32506000	4011097812687	433
HG	32507000	4011097812649	433
HG	32507140	4059625229316	433
HG	32507340	4059625229330	433
HG	32507670	4059625212455	433
HG	32507700	4059625212462	433
HG	32507990	4059625229347	433
HG	32508000	4011097812625	433
HG	32511000	4011097812588	434
HG	32511140	4059625222539	434
HG	32511340	4059625222546	434
HG	32511670	4059625231234	434
HG	32511700	4059625231241	434
HG	32511990	4059625222553	434
HG	32512000	4011097812540	433
HG	32512140	4059625229354	433
HG	32512340	4059625229378	433
HG	32512670	4059625231500	433
HG	32512700	4059625231517	433
HG	32512990	4059625229385	433
HG	32514000	4011097810973	435
HG	32515000	4011097835297	435
HG	32515140	4059625229392	435
HG	32515340	4059625229408	435
HG	32515670	4059625231524	435
HG	32515700	4059625231531	435
HG	32515990	4059625229415	435
HG	32520000	4011097812472	436
HG	32520140	4059625229446	436
HG	32520340	4059625229453	436
HG	32520670	4059625231548	436
HG	32520700	4059625231555	436
HG	32520990	4059625229460	436
HG	32525000	4011097835280	436
HG	32526000	4011097835273	436
HG	32526140	4059625229422	436
HG	32526340	4059625204672	436
HG	32526670	4059625231562	436
HG	32526700	4059625231579	436
HG	32526990	4059625229439	436
HG	32531000	4011097835259	439
HG	32532000	4011097835242	437
HG	32532140	4059625229491	437
HG	32532340	4059625229507	437
HG	32532670	4059625231586	437
HG	32532700	4059625231593	437
HG	32532990	4059625229514	437
HG	32540000	4011097812410	438
HG	32540140	4059625231708	438
HG	32540340	4059625229477	438
HG	32540670	4059625231715	438
HG	32540700	4059625231722	438
HG	32540990	4059625231739	438
HG	32542000	4059625007266	440
HG	32543000	4011097835235	440
HG	32543140	4059625231746	440

brand	Code no.	EAN	page
HG	32543340	4059625231753	440
HG	32543670	4059625231760	440
HG	32543700	4059625231777	440
HG	32543990	4059625231784	440
HG	32545000	4011097826097	438
HG	32545140	4059625231791	438
HG	32545340	4059625229484	438
HG	32545670	4059625231807	438
HG	32545700	4059625231814	438
HG	32545990	4059625231821	438
HG	32546000	4011097826073	439
HG	32546140	4059625231838	439
HG	32546340	4059625231845	439
HG	32546670	4059625231852	439
HG	32546700	4059625231869	439
HG	32546990	4059625231876	439
HG	32548000	4011097835228	441
HG	32550000	4011097835211	441
HG	32551000	4011097835204	442
HG	32552000	4011097835198	442
HG	32553000	4011097835181	443
HG	32560000	4011097812373	443
HG	32560140	4059625241585	443
HG	32560340	4059625241578	443
HG	32560670	4059625241561	443
HG	32560700	4059625241554	443
HG	32560990	4059625241547	443
HG	32565000	4011097826066	444
HG	32565140	4059625231883	444
HG	32565340	4059625231890	444
HG	32565670	4059625231906	444
HG	32565700	4059625231913	444
HG	32565990	4059625231920	444
40			
HG	40068000	4011097218939	653
HG	40088000	4011097120461	653
HG	40089000	4011097147208	653
HG	40418000	4011097191669	722
HG	40418800	4011097304342	722
HG	40438000	4059625131589	721
HG	40438340	4059625297469	721
HG	40438670	4059625297452	721
HG	40438800	4059625131596	721
HG	40448000	4059625131602	721
HG	40448670	4059625297445	721
HG	40448800	4059625131619	721
HG	40468000	4059625131626	721
HG	40468670	4059625297438	721
HG	40468800	4059625131633	721
HG	40952800	4059625027134	739
HG	40953670	4059625325148	739
HG	40953800	4059625027141	739
HG	40960000	4059625175194	722
HG	40961000	4059625175200	722
HG	40963000	4059625189269	723
41			
HG	41710000	4059625123140	648
HG	41711000	4059625123089	649
HG	41712000	4059625123010	650
HG	41713000	4059625123102	649

brand	Code no.	EAN	page
HG	41714000	4059625123133	648
HG	41715000	4059625123058	648
HG	41716000	4059625123003	650
HG	41717000	4059625123126	651
HG	41718000	4059625123041	648
HG	41720000	4059625123027	650
HG	41722000	4059625123034	651
HG	41723000	4059625123119	651
HG	41724000	4059625123065	649
HG	41725000	4059625123096	649
HG	41726000	4059625123072	651
HG	41727000	4059625131374	652
HG	41728000	4059625131381	652
HG	41741000	4059625296868	640
HG	41741140	4059625296851	640
HG	41741340	4059625296844	640
HG	41741670	4059625296837	640
HG	41741700	4059625296820	640
HG	41741990	4059625296813	640
HG	41742000	4059625296325	641
HG	41742140	4059625296318	641
HG	41742340	4059625296301	641
HG	41742670	4059625296295	641
HG	41742700	4059625296288	641
HG	41742990	4059625296271	641
HG	41743000	4059625296264	642
HG	41743140	4059625296257	642
HG	41743340	4059625296240	642
HG	41743670	4059625296233	642
HG	41743700	4059625296226	642
HG	41743990	4059625296219	642
HG	41744000	4059625296806	640
HG	41744140	4059625296790	640
HG	41744340	4059625296783	640
HG	41744670	4059625296776	640
HG	41744700	4059625296769	640
HG	41744990	4059625296752	640
HG	41745000	4059625296561	639
HG	41745140	4059625296554	639
HG	41745340	4059625296547	639
HG	41745670	4059625296530	639
HG	41745700	4059625296523	639
HG	41745990	4059625296516	639
HG	41746000	4059625297131	639
HG	41746140	4059625297124	639
HG	41746340	4059625297117	639
HG	41746670	4059625297100	639
HG	41746700	4059625297094	639
HG	41746990	4059625297087	639
HG	41747000	4059625296202	642
HG	41747140	4059625296196	642
HG	41747340	4059625296189	642
HG	41747670	4059625296172	642
HG	41747700	4059625296165	642
HG	41747990	4059625296158	642
HG	41748000	4059625297377	644
HG	41748140	4059625297360	644
HG	41748340	4059625297353	644
HG	41748670	4059625297346	644
HG	41748700	4059625297339	644

Code Numbers (HG = hansgrohe, AX = AXOR)

brand	Code no.	EAN	page
HG	41748990	4059625297322	644
HG	41749000	4059625297070	639
HG	41749140	4059625297063	639
HG	41749340	4059625297056	639
HG	41749670	4059625297049	639
HG	41749700	4059625297032	639
HG	41749990	4059625297025	639
HG	41751000	4059625296745	643
HG	41751140	4059625296738	643
HG	41751340	4059625296721	643
HG	41751670	4059625296714	643
HG	41751700	4059625296707	643
HG	41751990	4059625296691	643
HG	41752000	4059625296509	645
HG	41752140	4059625296493	645
HG	41752340	4059625296486	645
HG	41752670	4059625296479	645
HG	41752700	4059625296462	645
HG	41752990	4059625296455	645
HG	41753000	4059625297018	644
HG	41753140	4059625297001	644
HG	41753340	4059625296998	644
HG	41753670	4059625296981	644
HG	41753700	4059625296974	644
HG	41753990	4059625296967	644
HG	41754000	4059625296141	641
HG	41754140	4059625296134	641
HG	41754340	4059625296127	641
HG	41754670	4059625296110	641
HG	41754700	4059625296103	641
HG	41754990	4059625295892	641
HG	41755000	4059625297315	642
HG	41755140	4059625297308	642
HG	41755340	4059625297292	642
HG	41755670	4059625297285	642
HG	41755700	4059625297278	642
HG	41755990	4059625297261	642
HG	41756000	4059625296950	644
HG	41756140	4059625296943	644
HG	41756340	4059625296936	644
HG	41756670	4059625296929	644
HG	41756700	4059625296912	644
HG	41756990	4059625296905	644
HG	41759000	4059625297254	643
HG	41759140	4059625297247	643
HG	41759340	4059625297230	643
HG	41759670	4059625297223	643
HG	41759700	4059625297216	643
HG	41759990	4059625297209	643
HG	41770000	4059625297193	641
HG	41770140	4059625297186	641
HG	41770340	4059625297179	641
HG	41770670	4059625297162	641
HG	41770700	4059625297155	641
HG	41770990	4059625297148	641
HG	41771000	4059625296448	644
HG	41771140	4059625296431	644
HG	41771340	4059625296424	644
HG	41771670	4059625296417	644
HG	41771700	4059625296400	644

brand	Code no.	EAN	page
HG	41771990	4059625296394	644
HG	41772000	4059625296684	644
HG	41772140	4059625296677	644
HG	41772340	4059625296660	644
HG	41772670	4059625296653	644
HG	41772700	4059625296646	644
HG	41772990	4059625296639	644
HG	41773000	4059625296387	645
HG	41773140	4059625296370	645
HG	41773340	4059625296363	645
HG	41773670	4059625296356	645
HG	41773700	4059625296349	645
HG	41773990	4059625296332	645
HG	41774000	4059625296622	640
HG	41774140	4059625296615	640
HG	41774340	4059625296608	640
HG	41774670	4059625296592	640
HG	41774700	4059625296585	640
HG	41774990	4059625296578	640
HG	41775000	4059625296899	645
HG	41775670	4059625296882	645
HG	41775700	4059625296875	645
HG	41790000	4059625321683	646
HG	41790140	4059625321911	646
HG	41790340	4059625321690	646
HG	41790670	4059625321935	646
HG	41790700	4059625321928	646
HG	41790990	4059625321904	646
HG	41791000	4059625321942	646
HG	41791140	4059625321973	646
HG	41791340	4059625321959	646
HG	41791670	4059625321997	646
HG	41791700	4059625321980	646
HG	41791990	4059625321966	646
43			
HG	43301800	4059625007082	729
HG	43302800	4059625007129	729
HG	43303800	4059625007167	731
HG	43305800	4059625007099	729
HG	43306800	4059625007105	730
HG	43307800	4059625007112	730
HG	43308800	4059625007136	729
HG	43309800	4059625007143	731
HG	43310800	4059625007150	731
HG	43311800	4059625007174	731
HG	43312170	4059625104781	734
HG	43312290	4059625104774	734
HG	43312380	4059625104767	734
HG	43313170	4059625104750	734
HG	43313290	4059625104743	734
HG	43313380	4059625104736	734
HG	43314170	4059625104729	734
HG	43314290	4059625104712	734
HG	43314380	4059625104705	734
HG	43315170	4059625104699	735
HG	43315290	4059625104682	735
HG	43315380	4059625104941	735
HG	43316170	4059625104934	735
HG	43316290	4059625104927	735
HG	43316380	4059625104910	735

brand	Code no.	EAN	page
HG	43330170	4059625173572	734
HG	43330290	4059625173565	734
HG	43330380	4059625173558	734
HG	43331800	4059625177792	730
HG	43332800	4059625177808	730
HG	43333000	4059625024003	739
HG	43425800	4059625007181	732
HG	43426800	4059625007198	732
HG	43427800	4059625007204	732
HG	43428800	4059625007211	732
HG	43429800	4059625007228	733
HG	43430800	4059625007235	733
HG	43431170	4059625104903	735
HG	43431290	4059625104897	735
HG	43431380	4059625104880	735
HG	43432170	4059625104873	736
HG	43432290	4059625104866	736
HG	43432380	4059625104859	736
HG	43433170	4059625104842	736
HG	43433290	4059625104835	736
HG	43433380	4059625104828	736
HG	43434170	4059625104811	736
HG	43434290	4059625104804	736
HG	43434380	4059625104798	736
HG	43921800	4059625248737	737
HG	43922800	4059625248720	737
HG	43927000	4059625105009	737
HG	43928000	4059625104996	737
HG	43931800	4059625248713	738
HG	43932800	4059625248706	738
HG	43937000	4059625104989	738
HG	43938000	4059625104972	738
50			
HG	50001000	4011097146867	311
HG	50001140	4011097820347	311
HG	50001340	4011097820330	311
HG	50001670	4059625324950	311
HG	50001700	4059625324967	311
HG	50001990	4011097820415	311
HG	50100000	4011097369495	311
HG	50100140	4011097820125	311
HG	50100340	4011097820101	311
HG	50100670	4059625266113	311
HG	50100700	4059625266120	311
HG	50100990	4011097820286	311
HG	50105000	4011097716282	311
HG	50107000	4011097664323	301
52			
HG	52010000	4011097123349	315
HG	52053000	4011097123431	315
HG	52100000	4011097346199	314
HG	52105000	4011097440804	314
HG	52105140	4059625001400	314
HG	52105340	4059625001370	314
HG	52105670	4059625240182	314
HG	52105700	4059625240199	314
HG	52105990	4059625001707	314
HG	52120000	4011097369563	314
53			
HG	53002000	4011097123912	315

brand	Code no.	EAN	page
HG	53010000	4011097123936	316
HG	53428000	4011097124070	317
HG	53428670	4059625346747	317
HG	53428700	4059625346754	317
HG	53493000	4011097124193	316
HG	53493670	4059625315149	316
HG	53493700	4059625315132	316
HG	53555000	4011097124308	316
HG	53646000	4011097124384	317
HG	53971000	4011097124872	773
HG	53985000	4011097124988	775
HG	53990000	4011097125008	317
55			
HG	55213000	4011097125121	315
HG	55237000	4011097125138	316
56			
HG	56010180	4059625355589	295
HG	56011180	4059625355572	295
HG	56012180	4059625355565	295
HG	56013180	4059625355558	295
HG	56014180	4059625355541	295
HG	56015180	4059625355534	295
HG	56016180	4059625355527	296
HG	56017180	4059625355510	296
HG	56018180	4059625355503	296
HG	56019180	4059625355497	296
HG	56020180	4059625355480	296
HG	56021180	4059625355473	296
HG	56022180	4059625355466	296
HG	56023180	4059625355459	296
HG	56024180	4059625355442	296
HG	56025180	4059625355435	296
HG	56026180	4059625355428	296
HG	56027180	4059625355411	296
HG	56029000	4059625350621	281
HG	56030000	4059625350614	281
HG	56031000	4059625350607	281
HG	56032000	4059625350591	281
HG	56033000	4059625350584	281
HG	56034000	4059625350577	281
HG	56036670	4059625350515	278
HG	56036700	4059625350508	278
HG	56036800	4059625355398	278
HG	56037670	4059625350454	278
HG	56037700	4059625350447	278
HG	56037800	4059625355381	278
HG	56038000	4059625350430	278
HG	56038670	4059625350393	278
HG	56038700	4059625350386	278
HG	56038800	4059625355374	278
HG	56040610	4059625360910	278
HG	56040670	4059625350324	278
HG	56040700	4059625350317	278
HG	56040800	4059625355367	278
HG	56041670	4059625350263	278
HG	56041700	4059625350256	278
HG	56041800	4059625355350	278
HG	56042670	4059625350201	278
HG	56042700	4059625350195	278
HG	56042800	4059625355343	278

Code Numbers (HG = hansgrohe, AX = AXOR)

brand	Code no.	EAN	page
HG	56043000	4059625350188	275
HG	56043140	4059625350171	275
HG	56043340	4059625350164	275
HG	56043670	4059625350157	275
HG	56043700	4059625350140	275
HG	56043800	4059625350133	275
HG	56043990	4059625350126	275
HG	56044000	4059625350119	275
HG	56044140	4059625350102	275
HG	56044340	4059625350096	275
HG	56044670	4059625350089	275
HG	56044700	4059625350072	275
HG	56044800	4059625350065	275
HG	56044990	4059625350058	275
HG	56045000	4059625350041	275
HG	56045140	4059625350034	275
HG	56045340	4059625350027	275
HG	56045670	4059625350010	275
HG	56045700	4059625350003	275
HG	56045800	4059625349991	275
HG	56045990	4059625349984	275
HG	56046000	4059625349977	275
HG	56046140	4059625349960	275
HG	56046340	4059625349953	275
HG	56046670	4059625349946	275
HG	56046700	4059625349939	275
HG	56046800	4059625349922	275
HG	56046990	4059625349915	275
HG	56047000	4059625349908	276
HG	56047140	4059625349892	276
HG	56047340	4059625349885	276
HG	56047670	4059625349878	276
HG	56047700	4059625349861	276
HG	56047800	4059625349854	276
HG	56047990	4059625349847	276
HG	56050000	4059625349816	276
HG	56050140	4059625349809	276
HG	56050340	4059625349793	276
HG	56050670	4059625349786	276
HG	56050700	4059625349779	276
HG	56050800	4059625349762	276
HG	56050990	4059625349755	276
HG	56051000	4059625349748	277
HG	56051140	4059625349731	277
HG	56051340	4059625349724	277
HG	56051670	4059625349717	277
HG	56051700	4059625349700	277
HG	56051800	4059625349694	277
HG	56051990	4059625349687	277
HG	56052000	4059625349670	277
HG	56052140	4059625349663	277
HG	56052340	4059625349656	277
HG	56052670	4059625349649	277
HG	56052700	4059625349632	277
HG	56052800	4059625349625	277
HG	56052990	4059625349618	277
HG	56053000	4059625349601	277
HG	56053140	4059625349595	277
HG	56053340	4059625349588	277
HG	56053670	4059625349571	277

brand	Code no.	EAN	page
HG	56053700	4059625349564	277
HG	56053800	4059625349557	277
HG	56053990	4059625349540	277
HG	56054000	4059625349533	277
HG	56054140	4059625349526	277
HG	56054340	4059625349519	277
HG	56054670	4059625349502	277
HG	56054700	4059625349496	277
HG	56054800	4059625349489	277
HG	56054990	4059625349472	277
HG	56055800	4059625349465	289
HG	56056000	4059625349441	290
HG	56057380	4059625443132	630
HG	56057670	4059625351598	630
HG	56057700	4059625351581	630
HG	56058670	4059625489420	631
HG	56058700	4059625489413	631
HG	56058800	4059625489406	631
HG	56060670	4059625489390	635
HG	56060700	4059625489383	635
HG	56060800	4059625489376	635
HG	56061380	4059625443125	630
HG	56061670	4059625351567	630
HG	56061700	4059625351550	630
HG	56062670	4059625430156	635
HG	56062700	4059625430149	635
HG	56062800	4059625430132	635
HG	56063670	4059625489369	636
HG	56063700	4059625489352	636
HG	56063800	4059625489345	636
HG	56064380	4059625443149	630
HG	56064670	4059625351536	630
HG	56064700	4059625351529	630
HG	56065670	4059625430125	632
HG	56065700	4059625430118	632
HG	56065800	4059625430101	632
HG	56067380	4059625443156	630
HG	56067670	4059625351505	630
HG	56067700	4059625351499	630
HG	56070670	4059625351475	632
HG	56070700	4059625351468	632
HG	56070800	4059625351451	632
HG	56073670	4059625351444	632
HG	56073700	4059625351437	632
HG	56073800	4059625351420	632
HG	56076670	4059625351413	633
HG	56076700	4059625351406	633
HG	56076800	4059625351390	633
HG	56079670	4059625351383	633
HG	56079700	4059625351376	633
HG	56079800	4059625351369	633
HG	56082670	4059625351352	633
HG	56082700	4059625351345	633
HG	56082800	4059625351338	633
HG	56085670	4059625351321	633
HG	56085700	4059625351314	633
HG	56085800	4059625351307	633
HG	56088670	4059625351291	634
HG	56088700	4059625351284	634
HG	56088800	4059625351277	634

brand	Code no.	EAN	page
HG	56089670	4059625489338	636
HG	56089700	4059625489321	636
HG	56089800	4059625489314	636
HG	56090670	4059625489307	636
HG	56090700	4059625488799	636
HG	56090800	4059625488782	636
HG	56091670	4059625351260	634
HG	56091700	4059625351253	634
HG	56091800	4059625351246	634
HG	56092380	4059625445921	631
HG	56092670	4059625430095	631
HG	56092700	4059625430088	631
HG	56093380	4059625445938	631
HG	56093670	4059625430064	631
HG	56093700	4059625430057	631
HG	56094140	4059625349069	637
HG	56094340	4059625349052	637
HG	56094670	4059625349045	637
HG	56094700	4059625349038	637
HG	56094800	4059625349021	637
HG	56094990	4059625349014	637
HG	56095140	4059625349007	637
HG	56095340	4059625348994	637
HG	56095670	4059625348987	637
HG	56095700	4059625348970	637
HG	56095800	4059625348963	637
HG	56095990	4059625348956	637
HG	56096140	4059625348949	637
HG	56096340	4059625348932	637
HG	56096670	4059625348925	637
HG	56096700	4059625348918	637
HG	56096800	4059625348901	637
HG	56096990	4059625348895	637
HG	56097140	4059625348888	637
HG	56097340	4059625348871	637
HG	56097670	4059625348864	637
HG	56097700	4059625348857	637
HG	56097800	4059625348840	637
HG	56097990	4059625348833	637
HG	56098140	4059625348826	638
HG	56098340	4059625348819	638
HG	56098670	4059625348802	638
HG	56098700	4059625348796	638
HG	56098800	4059625348789	638
HG	56098990	4059625348772	638
HG	56099140	4059625348765	638
HG	56099340	4059625348758	638
HG	56099670	4059625348741	638
HG	56099700	4059625348734	638
HG	56099800	4059625348727	638
HG	56099990	4059625348710	638
HG	56100800	4059625351239	638
HG	56112800	4059625348697	289
HG	56158000	4059625488775	293
HG	56158670	4059625564769	293
HG	56161000	4059625488768	293
HG	56161670	4059625564776	293
HG	56162800	4059625430033	286
HG	56163000	4059625430026	288
HG	56164800	4059625430019	286

brand	Code no.	EAN	page
HG	56165000	4059625430002	288
HG	56166800	4059625429990	286
HG	56167000	4059625429983	288
HG	56168800	4059625429976	286
HG	56169000	4059625429969	288
HG	56170800	4059625429952	286
HG	56171000	4059625429945	288
HG	56172800	4059625429938	286
HG	56173000	4059625429921	288
HG	56174800	4059625429914	285
HG	56175000	4059625429907	287
HG	56176800	4059625429891	285
HG	56177000	4059625429884	287
HG	56178800	4059625429877	285
HG	56179000	4059625429860	287
HG	56180800	4059625429853	285
HG	56181000	4059625429846	287
HG	56182800	4059625429839	285
HG	56183000	4059625429822	287
HG	56184800	4059625429815	285
HG	56185000	4059625429808	287
HG	56186800	4059625429792	284
HG	56187800	4059625429785	284
HG	56188800	4059625429778	284
HG	56189800	4059625429761	284
HG	56190800	4059625429754	284
HG	56196800	4059625429747	282
HG	56197800	4059625429730	282
HG	56198800	4059625429723	282
HG	56199800	4059625429716	282
HG	56200800	4059625429709	282
HG	56201800	4059625429693	282
HG	56215670	4059625489710	279
HG	56215700	4059625489703	279
HG	56215800	4059625489697	279
HG	56216670	4059625489741	279
HG	56216700	4059625489734	279
HG	56216800	4059625489727	279
HG	56217670	4059625489772	279
HG	56217700	4059625489765	279
HG	56217800	4059625489758	279
HG	56218670	4059625489802	280
HG	56218700	4059625489796	280
HG	56218800	4059625489789	280
HG	56219000	4059625489536	283
HG	56220000	4059625489529	283
HG	56221000	4059625489512	283
HG	56222000	4059625489505	283
HG	56223000	4059625489499	283
HG	56225800	4059625586907	290
HG	56226800	4059625586914	290
HG	56246800	4059625429686	291
HG	56247670	4059625429679	292
HG	56247800	4059625429662	292
HG	56248800	4059625429655	292
HG	56249670	4059625429648	292
HG	56249800	4059625429631	292
HG	56250670	4059625429624	291
HG	56250800	4059625429617	291
HG	56251670	4059625429600	291

Code Numbers (HG = hansgrohe, AX = AXOR)

brand	Code no.	EAN	page
HG	56251800	4059625429594	291
HG	56256000	4059625512173	293
HG	56261800	4059625595671	276
HG	56262800	4059625595688	277
HG	56270670	4059625541463	288
HG	56270800	4059625541456	288
HG	56271670	4059625541487	288
HG	56271800	4059625541470	288
HG	56272670	4059625541500	288
HG	56272800	4059625541494	288
HG	56273670	4059625541524	288
HG	56273800	4059625541517	288
HG	56274670	4059625541548	288
HG	56274800	4059625541531	288
HG	56275670	4059625541562	288
HG	56275800	4059625541555	288
HG	56276670	4059625541586	288
HG	56276800	4059625541579	288
HG	56373000	4011097125282	304
58			
HG	58112000	4011097651804	306
HG	58113000	4011097423913	309
HG	58115180	4011097433103	308
HG	58116180	4011097433110	309
HG	58117000	4011097417479	306
HG	58117140	4059625003732	306
HG	58117340	4059625002599	306
HG	58117670	4059625235683	306
HG	58117700	4059625235676	306
HG	58117990	4059625004050	306
HG	58123000	4011097363363	308
HG	58125180	4011097140223	307
HG	58126180	4011097140230	307
HG	58127000	4011097140247	305
HG	58128000	4011097140353	305
HG	58140180	4011097233543	302
HG	58141180	4011097233574	302
HG	58142000	4011097233598	302
HG	58143000	4011097232874	303
HG	58150000	4011097492650	303
HG	58185000	4011097233581	301
HG	58185140	4059625243985	301
HG	58185340	4059625243992	301
HG	58185670	4059625244203	301
HG	58185700	4059625244210	301
HG	58185990	4059625178706	301
HG	58186000	4011097440347	301
HG	58192000	4011097412955	310
60			
HG	60056000	4011097609751	297
HG	60067000	4011097557694	297
71			
HG	71070000	4011097738710	564
HG	71070670	4059625460511	564
HG	71071000	4011097738703	564
HG	71071670	4059625460535	564
HG	71072000	4011097738697	564
HG	71072670	4059625460559	564
HG	71073000	4011097738680	564
HG	71073670	4059625460573	564

brand	Code no.	EAN	page
HG	71074000	4011097738673	566
HG	71075000	4011097738666	567
HG	71076000	4011097738659	567
HG	71077000	4011097738642	564
HG	71077670	4059625460597	564
HG	71078000	4011097753812	565
HG	71090000	4011097738628	565
HG	71090670	4059625461419	565
HG	71091000	4011097738611	565
HG	71091670	4059625461433	565
HG	71095000	4011097738604	567
HG	71100000	4011097738581	565
HG	71100670	4059625461457	565
HG	71101000	4011097738574	565
HG	71101670	4059625461471	565
HG	71102000	4011097738567	565
HG	71102670	4059625461501	565
HG	71103000	4011097738550	565
HG	71103670	4059625461525	565
HG	71104000	4011097753829	565
HG	71105000	4011097738543	567
HG	71107000	4011097738529	565
HG	71107670	4059625461549	565
HG	71120000	4011097738499	569
HG	71120670	4059625461563	569
HG	71130000	4011097738482	568
HG	71130670	4059625462034	568
HG	71131000	4011097738475	568
HG	71131670	4059625462058	568
HG	71133000	4011097738468	569
HG	71170000	4011097783475	564
HG	71170670	4059625461587	564
HG	71171000	4011097783482	565
HG	71171670	4059625461600	565
HG	71200000	4011097738444	572
HG	71200670	4059625461624	572
HG	71201000	4059625395318	572
HG	71201670	4059625462072	572
HG	71203000	4059625076873	572
HG	71204000	4011097753836	572
HG	71204670	4059625461648	572
HG	71210000	4059625321461	592
HG	71210670	4059625326466	592
HG	71211000	4059625325346	606
HG	71211670	4059625326459	606
HG	71214000	4059625325544	593
HG	71215000	4059625329955	592
HG	71216000	4059625329962	606
HG	71218000	4059625404416	592
HG	71218670	4059625404430	592
HG	71219000	4059625404454	606
HG	71219670	4059625404478	606
HG	71220000	4011097738420	570
HG	71220670	4059625470329	570
HG	71221000	4011097738413	568
HG	71222000	4011097738406	568
HG	71225000	4011097769981	571
HG	71243000	4011097768243	575
HG	71251000	4059625356210	567
HG	71251670	4059625462096	567

brand	Code no.	EAN	page
HG	71252000	4059625356180	567
HG	71252670	4059625462119	567
HG	71253000	4059625356173	567
HG	71253670	4059625462133	567
HG	71254000	4059625356135	567
HG	71254670	4059625462157	567
HG	71255000	4059625356128	567
HG	71255670	4059625462171	567
HG	71256000	4059625356111	570
HG	71256670	4059625470299	570
HG	71257000	4059625356067	567
HG	71257670	4059625462195	567
HG	71258000	4059625356036	567
HG	71258670	4059625462218	567
HG	71263000	4011097768250	581
HG	71280000	4011097741451	715
HG	71286000	4011097754024	718
HG	71290000	4011097738352	571
HG	71310000	4011097738338	579
HG	71311000	4011097738321	578
HG	71312000	4011097738314	577
HG	71313000	4011097738307	579
HG	71315000	4011097738284	578
HG	71315670	4059625461662	578
HG	71400000	4011097738260	573
HG	71400670	4059625461686	573
HG	71401000	4011097738253	574
HG	71401670	4059625461709	574
HG	71402000	4011097789507	574
HG	71405000	4011097738246	575
HG	71405670	4059625470237	575
HG	71406000	4011097738239	576
HG	71407000	4011097769967	575
HG	71407670	4059625470213	575
HG	71409000	4059625062463	576
HG	71410000	4011097738222	520
HG	71410670	4059625470206	520
HG	71420000	4059625316290	596
HG	71420670	4059625326442	596
HG	71430000	4011097738215	573
HG	71440000	4059625316283	593
HG	71440670	4059625326428	593
HG	71442000	4059625325353	598
HG	71442670	4059625326381	598
HG	71443000	4059625325391	599
HG	71444000	4059625325506	598
HG	71446000	4059625325513	599
HG	71447000	4059625325612	594
HG	71449000	4059625325438	595
HG	71449670	4059625326374	595
HG	71450000	4059625316269	607
HG	71450670	4059625326350	607
HG	71452000	4059625325377	611
HG	71452670	4059625326312	611
HG	71453000	4059625316245	607
HG	71454000	4059625316238	594
HG	71456000	4059625328583	597
HG	71456670	4059625330036	597
HG	71458000	4059625325322	608
HG	71458670	4059625326305	608

brand	Code no.	EAN	page
HG	71459000	4059625328590	610
HG	71459670	4059625338872	610
HG	71460000	4059625316221	609
HG	71460670	4059625326282	609
HG	71461000	4059625325360	597
HG	71461670	4059625330043	597
HG	71462000	4059625325384	610
HG	71463000	4059625325520	611
HG	71464000	4059625325537	612
HG	71466000	4059625363713	595
HG	71466670	4059625363706	595
HG	71467000	4059625363690	595
HG	71467670	4059625363683	595
HG	71468000	4059625363676	608
HG	71468670	4059625363669	608
HG	71469000	4059625363652	608
HG	71469670	4059625363645	608
HG	71472000	4059625399880	609
HG	71473000	4059625399873	596
HG	71473670	4059625417379	596
HG	71474000	4011097778563	519
HG	71474140	4059625231982	519
HG	71474340	4059625229583	519
HG	71474670	4059625231999	519
HG	71474700	4059625232002	519
HG	71474990	4059625232019	519
HG	71501000	4059625353370	591
HG	71502000	4059625353363	591
HG	71503000	4059625353356	591
HG	71504000	4059625353349	591
HG	71550000	4059625316214	586
HG	71550670	4059625326268	586
HG	71551000	4059625316207	586
HG	71551670	4059625326244	586
HG	71552000	4059625316191	586
HG	71552670	4059625326220	586
HG	71553000	4059625325407	590
HG	71553670	4059625326190	590
HG	71554000	4059625325414	589
HG	71557000	4059625316184	586
HG	71558000	4059625316177	586
HG	71558670	4059625326169	586
HG	71559000	4059625316160	586
HG	71560000	4059625321454	603
HG	71560670	4059625326152	603
HG	71561000	4059625321447	603
HG	71561670	4059625326138	603
HG	71562000	4059625321430	603
HG	71562670	4059625326114	603
HG	71563000	4059625325476	605
HG	71563670	4059625326084	605
HG	71564000	4059625325483	604
HG	71566000	4059625321423	603
HG	71567000	4059625325445	603
HG	71567670	4059625326046	603
HG	71568000	4059625321416	603
HG	71569000	4059625325452	603
HG	71569670	4059625326015	603
HG	71570000	4059625324974	588
HG	71571000	4059625324981	588

Code Numbers (HG = hansgrohe, AX = AXOR)

brand	Code no.	EAN	page
HG	71572000	4059625324998	588
HG	71576000	4059625325421	590
HG	71576670	4059625325933	590
HG	71578000	4059625325315	605
HG	71578670	4059625325919	605
HG	71580000	4059625316153	586
HG	71580670	4059625325896	586
HG	71581000	4059625316146	587
HG	71582000	4059625316139	587
HG	71582670	4059625325889	587
HG	71583000	4059625325551	589
HG	71583670	4059625325872	589
HG	71584000	4059625316122	586
HG	71584670	4059625325865	586
HG	71585000	4059625316115	586
HG	71585670	4059625325858	586
HG	71587000	4059625325599	587
HG	71588000	4059625325605	587
HG	71589000	4059625428030	586
HG	71589670	4059625428047	586
HG	71590000	4059625321409	603
HG	71591000	4059625325469	603
HG	71591670	4059625325834	603
HG	71592000	4059625325568	604
HG	71592670	4059625325810	604
HG	71593000	4059625321393	603
HG	71593670	4059625325803	603
HG	71594000	4059625321386	603
HG	71594670	4059625325797	603
HG	71598000	4059625428054	586
HG	71598670	4059625428061	586
HG	71599000	4059625516386	587
HG	71600000	4011097737799	580
HG	71600670	4059625461723	580
HG	71601000	4011097737782	580
HG	71601670	4059625461747	580
HG	71604000	4059625194157	582
HG	71605000	4011097737775	581
HG	71605670	4059625470183	581
HG	71606000	4011097737768	582
HG	71607000	4011097754581	582
HG	71629000	4011097787749	573
HG	71630000	4011097737751	580
HG	71640000	4059625316108	600
HG	71640670	4059625325780	600
HG	71646000	4059625310762	600
HG	71647000	4059625325629	601
HG	71649000	4059625321379	602
HG	71649670	4059625338865	602
HG	71650000	4059625315798	612
HG	71650670	4059625325759	612
HG	71656000	4059625405406	613
HG	71658000	4059625325339	614
HG	71658670	4059625338858	614
HG	71663000	4059625399859	602
HG	71663670	4059625417362	602
HG	71666000	4011097769936	583
HG	71667000	4059625363638	601
HG	71667670	4059625363621	601
HG	71668000	4059625363614	613

brand	Code no.	EAN	page
HG	71668670	4059625363607	613
HG	71700000	4011097770703	512
HG	71701000	4011097770697	512
HG	71702000	4011097770680	512
HG	71703000	4011097770673	512
HG	71704000	4011097770666	512
HG	71705000	4011097770659	514
HG	71706000	4011097770642	515
HG	71707000	4011097770772	514
HG	71710000	4011097770765	513
HG	71710140	4059625232026	513
HG	71710340	4059625229521	513
HG	71710670	4059625232033	513
HG	71710700	4059625232040	513
HG	71710990	4059625232057	513
HG	71711000	4011097770758	513
HG	71712000	4011097770741	513
HG	71712140	4059625265789	513
HG	71712340	4059625147054	513
HG	71712670	4059625265765	513
HG	71712700	4059625265772	513
HG	71712990	4059625035573	513
HG	71713000	4011097770734	512
HG	71713140	4059625232064	512
HG	71713340	4059625232071	512
HG	71713670	4059625232088	512
HG	71713700	4059625232095	512
HG	71713990	4059625232101	512
HG	71714000	4011097770727	512
HG	71714140	4059625265833	512
HG	71714340	4059625265819	512
HG	71714670	4059625265796	512
HG	71714700	4059625265802	512
HG	71714990	4059625265826	512
HG	71715000	4011097778495	514
HG	71716000	4011097770710	513
HG	71716140	4059625232118	513
HG	71716340	4059625229538	513
HG	71716670	4059625232125	513
HG	71716700	4059625232132	513
HG	71716990	4059625232149	513
HG	71717000	4011097770826	513
HG	71717140	4059625265871	513
HG	71717340	4059625198001	513
HG	71717670	4059625265840	513
HG	71717700	4059625265857	513
HG	71717990	4059625265864	513
HG	71718000	4059625338841	511
HG	71719000	4059625338827	511
HG	71720000	4011097770819	517
HG	71720140	4059625250457	517
HG	71720340	4059625250440	517
HG	71720670	4059625250433	517
HG	71720700	4059625250426	517
HG	71720990	4059625250419	517
HG	71721000	4011097770802	517
HG	71729000	4011097770796	517
HG	71730000	4011097782409	521
HG	71731000	4011097782393	521
HG	71732000	4011097770789	516

brand	Code no.	EAN	page
HG	71733000	4011097770871	516
HG	71733140	4059625232156	516
HG	71733340	4059625229545	516
HG	71733670	4059625232163	516
HG	71733700	4059625232170	516
HG	71733990	4059625170472	516
HG	71734000	4011097778457	516
HG	71734140	4059625232187	516
HG	71734340	4059625232194	516
HG	71734670	4059625232200	516
HG	71734700	4059625232217	516
HG	71734990	4059625232224	516
HG	71740000	4011097770864	518
HG	71740140	4059625232231	518
HG	71740340	4059625221754	518
HG	71740670	4059625232248	518
HG	71740700	4059625232255	518
HG	71740990	4059625232262	518
HG	71745000	4011097770840	518
HG	71745140	4059625232279	518
HG	71745340	4059625232286	518
HG	71745670	4059625232293	518
HG	71745700	4059625232309	518
HG	71745990	4059625232316	518
HG	71746000	4011097770833	519
HG	71747000	4011097791395	520
HG	71748000	4011097788807	522
HG	71748140	4059625232323	522
HG	71748340	4059625232330	522
HG	71748670	4059625232347	522
HG	71748700	4059625232354	522
HG	71748990	4059625232361	522
HG	71750000	4011097782379	511
HG	71751000	4011097775791	511
HG	71752000	4011097782416	511
HG	71753000	4011097775784	511
HG	71754000	4011097782355	515
HG	71754140	4059625246429	515
HG	71754340	4059625246412	515
HG	71754670	4059625246443	515
HG	71754700	4059625246450	515
HG	71754990	4059625246436	515
HG	71755000	4011097782348	515
HG	71760000	4011097770918	523
HG	71760140	4059625232378	523
HG	71760340	4059625232385	523
HG	71760670	4059625232392	523
HG	71760700	4059625232408	523
HG	71760990	4059625232415	523
HG	71761000	4011097770901	523
HG	71764000	4059625194119	524
HG	71764670	4059625410523	524
HG	71765000	4011097778327	523
HG	71765140	4059625232422	523
HG	71765340	4059625147061	523
HG	71765670	4059625232439	523
HG	71765700	4059625232446	523
HG	71765990	4059625232453	523
HG	71766000	4011097770895	524
HG	71768000	4011097778310	524

brand	Code no.	EAN	page
HG	71800000	4059625085127	706
HG	71800800	4059625085110	706
HG	71801000	4059625085103	706
HG	71801800	4059625085097	706
HG	71802000	4059625085080	707
HG	71802800	4059625085073	707
HG	71803000	4059625085066	707
HG	71805000	4059625085042	708
HG	71809000	4059625084984	708
HG	71814000	4059625098356	709
HG	71814800	4059625098363	709
HG	71830000	4011097761268	716
HG	71831000	4011097766461	717
HG	71832000	4011097766454	716
HG	71833000	4011097775487	716
HG	71835000	4011097766430	715
HG	71836000	4011097766423	718
HG	71837000	4011097766416	717
HG	71839000	4011097775753	717
HG	71861000	4059625196755	715
HG	71864000	4059625198513	708
HG	71865000	4059625198520	709
HG	71866000	4059625198537	708
HG	71870000	4059625321362	719
HG	71870670	4059625325698	719
HG	71871000	4059625321355	719
HG	71871670	4059625325674	719
HG	71970000	4011097737737	382
72			
HG	72010000	4011097770048	500
HG	72011000	4011097770116	500
HG	72012000	4011097770109	500
HG	72013000	4011097770093	500
HG	72014000	4011097770086	500
HG	72017000	4011097770055	502
HG	72020000	4011097770161	500
HG	72021000	4011097770154	500
HG	72022000	4011097770147	500
HG	72023000	4011097770130	500
HG	72025000	4011097775708	501
HG	72031000	4011097770246	500
HG	72032000	4011097770239	500
HG	72110000	4011097770291	503
HG	72111000	4011097770284	503
HG	72113000	4011097782546	501
HG	72115000	4011097782522	501
HG	72200000	4011097770260	504
HG	72210000	4059625402412	546
HG	72210670	4059625402405	546
HG	72211000	4059625402146	556
HG	72211670	4059625402139	556
HG	72212000	4059625413074	546
HG	72212670	4059625413067	546
HG	72213000	4059625413050	556
HG	72213670	4059625413043	556
HG	72215000	4059625413036	545
HG	72215670	4059625419595	545
HG	72216000	4059625413029	556
HG	72290000	4011097770253	503
HG	72400000	4011097770383	505

Code Numbers (HG = hansgrohe, AX = AXOR)

brand	Code no.	EAN	page
HG	72401000	4011097770376	505
HG	72405000	4011097770352	505
HG	72406000	4011097770345	505
HG	72410000	4011097770420	506
HG	72412000	4011097782508	504
HG	72416000	4011097770314	507
HG	72417000	4011097770413	508
HG	72419000	4011097770390	508
HG	72430000	4059625412978	548
HG	72430670	4059625412961	548
HG	72431000	4059625412954	558
HG	72431670	4059625412947	558
HG	72434000	4059625412916	549
HG	72435000	4059625412909	559
HG	72436000	4059625412893	549
HG	72437000	4059625412886	559
HG	72440000	4059625402122	546
HG	72440670	4059625402115	546
HG	72442000	4059625402108	546
HG	72443000	4059625402092	547
HG	72443670	4059625402085	547
HG	72448000	4059625412862	548
HG	72448670	4059625412855	548
HG	72449000	4059625412848	548
HG	72449670	4059625412831	548
HG	72450000	4059625402078	557
HG	72450670	4059625402061	557
HG	72452000	4059625402054	557
HG	72458000	4059625412817	558
HG	72458670	4059625412800	558
HG	72459000	4059625412794	558
HG	72459670	4059625412787	558
HG	72466000	4059625402047	547
HG	72466670	4059625402030	547
HG	72467000	4059625412770	547
HG	72467670	4059625412763	547
HG	72468000	4059625402023	557
HG	72468670	4059625402016	557
HG	72469000	4059625412756	557
HG	72469670	4059625412749	557
HG	72503000	4059625402399	544
HG	72503670	4059625402382	544
HG	72506000	4059625412732	555
HG	72506670	4059625412725	555
HG	72510000	4059625402375	542
HG	72513000	4059625402337	542
HG	72513670	4059625402320	542
HG	72514000	4059625412695	542
HG	72517000	4059625402290	542
HG	72517670	4059625402283	542
HG	72519000	4059625402276	542
HG	72519670	4059625402269	542
HG	72520000	4059625412657	542
HG	72520670	4059625412640	542
HG	72527000	4059625437919	542
HG	72527670	4059625402207	542
HG	72528000	4059625412619	545
HG	72528670	4059625412602	545
HG	72530000	4059625412596	544
HG	72536000	4059625401699	543

brand	Code no.	EAN	page
HG	72536670	4059625401682	543
HG	72550000	4059625402009	553
HG	72551000	4059625412565	553
HG	72551670	4059625412558	553
HG	72553000	4059625401989	553
HG	72553670	4059625401972	553
HG	72554000	4059625412527	553
HG	72554670	4059625412510	553
HG	72557000	4059625401941	553
HG	72557670	4059625401934	553
HG	72559000	4059625401927	553
HG	72559670	4059625401910	553
HG	72560000	4059625412480	553
HG	72560670	4059625412473	553
HG	72568000	4059625412442	555
HG	72568670	4059625412435	555
HG	72576000	4059625401873	554
HG	72576670	4059625401866	554
HG	72580000	4059625418512	543
HG	72580670	4059625418505	543
HG	72581000	4059625418499	554
HG	72581670	4059625418482	554
HG	72582000	4059625418475	543
HG	72583000	4059625418468	554
HG	72584000	4059625418451	542
HG	72584670	4059625418444	542
HG	72585000	4059625418437	553
HG	72585670	4059625418420	553
HG	72586000	4059625418413	542
HG	72586670	4059625418406	542
HG	72587000	4059625418390	553
HG	72587670	4059625418383	553
HG	72588000	4059625418376	542
HG	72588670	4059625418369	542
HG	72589000	4059625418352	553
HG	72589670	4059625418345	553
HG	72590000	4059625418338	543
HG	72590670	4059625418321	543
HG	72591000	4059625418314	554
HG	72591670	4059625418307	554
HG	72600000	4011097770475	509
HG	72601000	4011097770468	509
HG	72605000	4011097770444	509
HG	72606000	4011097770437	510
HG	72640000	4059625401859	550
HG	72640670	4059625401842	550
HG	72642000	4059625401835	550
HG	72643000	4059625401828	550
HG	72643670	4059625401811	550
HG	72648000	4059625412404	552
HG	72648670	4059625412398	552
HG	72649000	4059625412381	551
HG	72649670	4059625412374	551
HG	72650000	4059625401804	560
HG	72650670	4059625401798	560
HG	72652000	4059625401781	560
HG	72658000	4059625412367	561
HG	72658670	4059625412350	561
HG	72659000	4059625412343	561
HG	72659670	4059625412336	561

brand	Code no.	EAN	page
HG	72667000	4059625401774	551
HG	72667670	4059625401767	551
HG	72668000	4059625401750	560
HG	72668670	4059625401743	560
HG	72800000	4059625255452	694
HG	72800340	4059625446102	694
HG	72800670	4059625255445	694
HG	72800800	4059625255438	694
HG	72801000	4059625255421	694
HG	72801340	4059625446119	694
HG	72801670	4059625255414	694
HG	72801800	4059625255407	694
HG	72802000	4059625255391	694
HG	72802670	4059625255384	694
HG	72802800	4059625255377	694
HG	72803000	4059625255360	694
HG	72803670	4059625255353	694
HG	72803800	4059625255346	694
HG	72804000	4059625255339	695
HG	72804670	4059625255322	695
HG	72804800	4059625255315	695
HG	72805000	4059625277768	695
HG	72805670	4059625277775	695
HG	72805800	4059625277782	695
HG	72806000	4059625255308	696
HG	72806670	4059625255292	696
HG	72806800	4059625255285	696
HG	72807000	4059625277850	696
HG	72807670	4059625277867	696
HG	72807800	4059625277874	696
HG	72808000	4059625255278	697
HG	72808340	4059625405017	697
HG	72808670	4059625255261	697
HG	72808800	4059625255254	697
HG	72809000	4059625255247	697
HG	72809340	4059625407998	697
HG	72809670	4059625255230	697
HG	72809800	4059625255223	697
HG	72810000	4011097772455	692
HG	72810800	4011097772462	692
HG	72812000	4011097772479	692
HG	72813000	4011097772493	691
HG	72813800	4011097772707	691
HG	72814000	4011097823621	692
HG	72814800	4011097823614	692
HG	72815000	4011097823607	691
HG	72815800	4011097823591	691
HG	72816000	4059625198155	692
HG	72817000	4059625197981	691
HG	72821000	4011097772752	690
HG	72821800	4011097772769	690
HG	72822000	4011097823584	690
HG	72822800	4011097823577	690
HG	72823000	4059625255667	689
HG	72823800	4059625255650	689
HG	72824000	4059625255643	689
HG	72824800	4059625255636	689
HG	72826000	4059625198209	690
HG	72827000	4059625277928	699
HG	72827670	4059625277935	699

brand	Code no.	EAN	page
HG	72827800	4059625277942	699
HG	72840000	4059625255216	698
HG	72840340	4059625446126	698
HG	72840670	4059625255209	698
HG	72840800	4059625255193	698
HG	72841000	4059625293218	722
HG	72841670	4059625293225	722
HG	72841800	4059625293232	722
HG	72842000	4059625269909	694
HG	72842670	4059625269695	694
HG	72843000	4059625269688	695
HG	72843670	4059625269671	695
HG	72844000	4059625269664	696
HG	72844670	4059625269657	696
HG	72845000	4059625269640	697
HG	72845670	4059625269633	697
HG	72859000	4059625450048	699
HG	72859670	4059625450031	699
HG	72859800	4059625450024	699
HG	72860000	4059625450017	698
HG	72860670	4059625450000	698
HG	72860800	4059625448694	698
HG	72861000	4059625565650	693
HG	72861340	4059625565629	693
HG	72861670	4059625565605	693
HG	72861800	4059625565575	693
73			
HG	73001000	4059625473658	480
HG	73001140	4059625473641	480
HG	73001670	4059625473634	480
HG	73001700	4059625473627	480
HG	73002000	4059625473610	480
HG	73002140	4059625473597	480
HG	73002670	4059625473580	480
HG	73002700	4059625473566	480
HG	73004000	4059625507803	481
HG	73004140	4059625526699	481
HG	73004670	4059625526682	481
HG	73004700	4059625526675	481
HG	73010000	4059625473504	481
HG	73010140	4059625473498	481
HG	73010670	4059625473481	481
HG	73010700	4059625473474	481
HG	73011000	4059625473467	481
HG	73011140	4059625473450	481
HG	73011670	4059625473443	481
HG	73011700	4059625473436	481
HG	73012000	4059625473429	481
HG	73012140	4059625473412	481
HG	73012670	4059625473405	481
HG	73012700	4059625473399	481
HG	73013000	4059625473382	482
HG	73013140	4059625473375	482
HG	73013670	4059625473368	482
HG	73013700	4059625473955	482
HG	73014000	4059625473948	481
HG	73014140	4059625473924	481
HG	73014670	4059625473917	481
HG	73014700	4059625473894	481
HG	73016000	4059625526668	481

Code Numbers (HG = hansgrohe, AX = AXOR)

brand	Code no.	EAN	page
HG	73016140	4059625526651	481
HG	73016670	4059625526644	481
HG	73016700	4059625526637	481
HG	73018000	4059625507810	481
HG	73018140	4059625526620	481
HG	73018670	4059625526613	481
HG	73018700	4059625526606	481
HG	73020000	4059625473832	477
HG	73020140	4059625473825	477
HG	73020670	4059625473818	477
HG	73020700	4059625473801	477
HG	73021000	4059625473795	477
HG	73021140	4059625473771	477
HG	73021670	4059625473764	477
HG	73021700	4059625473740	477
HG	73023000	4059625473726	477
HG	73023140	4059625473719	477
HG	73023670	4059625473702	477
HG	73023700	4059625473696	477
HG	73024000	4059625507827	477
HG	73024140	4059625526590	477
HG	73024670	4059625526583	477
HG	73024700	4059625526576	477
HG	73030000	4059625483435	480
HG	73030140	4059625483428	480
HG	73030670	4059625483411	480
HG	73030700	4059625483404	480
HG	73040000	4059625474242	477
HG	73040140	4059625474235	477
HG	73040670	4059625474228	477
HG	73040700	4059625474211	477
HG	73041000	4059625474204	478
HG	73041140	4059625474198	478
HG	73041670	4059625474181	478
HG	73041700	4059625474174	478
HG	73042000	4059625526569	478
HG	73042140	4059625526552	478
HG	73042670	4059625526545	478
HG	73042700	4059625526538	478
HG	73051000	4059625483312	482
HG	73051140	4059625483305	482
HG	73051670	4059625483299	482
HG	73051700	4059625483282	482
HG	73053000	4059625471067	479
HG	73053140	4059625471050	479
HG	73053670	4059625471043	479
HG	73053700	4059625471036	479
HG	73060000	4059625474129	478
HG	73060140	4059625474112	478
HG	73060670	4059625474105	478
HG	73060700	4059625474099	478
HG	73063000	4059625507841	479
HG	73063140	4059625526521	479
HG	73063670	4059625526514	479
HG	73063700	4059625526507	479
HG	73070000	4059625474044	478
HG	73070140	4059625474037	478
HG	73070670	4059625474020	478
HG	73070700	4059625474013	478
HG	73072000	4059625474006	478

brand	Code no.	EAN	page
HG	73072140	4059625473986	478
HG	73072670	4059625473979	478
HG	73072700	4059625474556	478
HG	73073000	4059625507834	478
HG	73073140	4059625525494	478
HG	73073670	4059625525487	478
HG	73073700	4059625525470	478
HG	73200000	4059625474495	483
HG	73200140	4059625474488	483
HG	73200670	4059625474471	483
HG	73200700	4059625474464	483
HG	73201000	4059625471029	472
HG	73201140	4059625474457	472
HG	73201670	4059625472163	472
HG	73201700	4059625472156	472
HG	73210000	4059625474440	483
HG	73210670	4059625474433	483
HG	73211000	4059625471012	472
HG	73211670	4059625472149	472
HG	73301000	4059625471005	469
HG	73301140	4059625474426	469
HG	73301670	4059625472132	469
HG	73301700	4059625472125	469
HG	73302000	4059625470992	469
HG	73302140	4059625474402	469
HG	73302670	4059625472118	469
HG	73302700	4059625472101	469
HG	73305000	4059625507056	470
HG	73305140	4059625525463	470
HG	73305670	4059625526910	470
HG	73305700	4059625526903	470
HG	73310000	4059625470985	470
HG	73310140	4059625474334	470
HG	73310670	4059625472095	470
HG	73310700	4059625472088	470
HG	73311000	4059625470978	470
HG	73311140	4059625474327	470
HG	73311670	4059625472071	470
HG	73311700	4059625472064	470
HG	73312000	4059625470961	470
HG	73312140	4059625474310	470
HG	73312670	4059625472057	470
HG	73312700	4059625472040	470
HG	73313000	4059625470954	471
HG	73313140	4059625474303	471
HG	73313670	4059625472033	471
HG	73313700	4059625472026	471
HG	73314000	4059625470947	470
HG	73314140	4059625474280	470
HG	73314670	4059625472019	470
HG	73314700	4059625472002	470
HG	73317000	4059625507063	470
HG	73317140	4059625526897	470
HG	73317670	4059625526880	470
HG	73317700	4059625526873	470
HG	73318000	4059625526866	470
HG	73318140	4059625526859	470
HG	73318670	4059625526842	470
HG	73318700	4059625526835	470
HG	73320000	4059625470930	466

brand	Code no.	EAN	page
HG	73320140	4059625474815	466
HG	73320670	4059625471999	466
HG	73320700	4059625471982	466
HG	73321000	4059625474808	466
HG	73321140	4059625474785	466
HG	73321670	4059625474778	466
HG	73321700	4059625474754	466
HG	73322000	4059625507070	466
HG	73322140	4059625526828	466
HG	73322670	4059625526811	466
HG	73322700	4059625526804	466
HG	73323000	4059625470923	466
HG	73323140	4059625474730	466
HG	73323670	4059625471975	466
HG	73323700	4059625471968	466
HG	73330000	4059625470916	469
HG	73330140	4059625470909	469
HG	73330670	4059625470893	469
HG	73330700	4059625470886	469
HG	73340000	4059625470831	466
HG	73340140	4059625474686	466
HG	73340670	4059625471951	466
HG	73340700	4059625471944	466
HG	73341000	4059625470824	467
HG	73341140	4059625474679	467
HG	73341670	4059625471937	467
HG	73341700	4059625471920	467
HG	73342000	4059625526798	467
HG	73342140	4059625526781	467
HG	73342670	4059625526774	467
HG	73342700	4059625526767	467
HG	73350000	4059625470817	471
HG	73350140	4059625470800	471
HG	73350670	4059625470794	471
HG	73350700	4059625470787	471
HG	73351000	4059625470770	471
HG	73351140	4059625470763	471
HG	73351670	4059625470756	471
HG	73351700	4059625470749	471
HG	73353000	4059625470732	468
HG	73353140	4059625470725	468
HG	73353670	4059625470718	468
HG	73353700	4059625470701	468
HG	73360000	4059625474624	467
HG	73360140	4059625474617	467
HG	73360670	4059625474600	467
HG	73360700	4059625474594	467
HG	73364000	4059625507094	468
HG	73364140	4059625526750	468
HG	73364670	4059625526743	468
HG	73364700	4059625526736	468
HG	73370000	4059625475102	467
HG	73370140	4059625475096	467
HG	73370670	4059625475089	467
HG	73370700	4059625475072	467
HG	73372000	4059625475065	467
HG	73372140	4059625475041	467
HG	73372670	4059625475034	467
HG	73372700	4059625475010	467
HG	73373000	4059625507087	467

brand	Code no.	EAN	page
HG	73373140	4059625526729	467
HG	73373670	4059625526712	467
HG	73373700	4059625526705	467
HG	73410000	4059625470619	486
HG	73410140	4059625483220	486
HG	73410670	4059625483213	486
HG	73410700	4059625483190	486
HG	73411000	4059625470602	475
HG	73411140	4059625470596	475
HG	73411670	4059625470589	475
HG	73411700	4059625470572	475
HG	73420000	4059625474952	485
HG	73420140	4059625474945	485
HG	73420670	4059625474938	485
HG	73420700	4059625474921	485
HG	73422000	4059625470565	474
HG	73422140	4059625474914	474
HG	73422670	4059625470558	474
HG	73422700	4059625470541	474
HG	73440000	4059625470534	473
HG	73440140	4059625470527	473
HG	73440670	4059625470510	473
HG	73440700	4059625470503	473
HG	73443000	4059625483176	486
HG	73443140	4059625483169	486
HG	73443670	4059625483152	486
HG	73443700	4059625483145	486
HG	73445000	4059625471913	484
HG	73445140	4059625471906	484
HG	73445670	4059625471791	484
HG	73445700	4059625471784	484
HG	73447000	4059625470480	475
HG	73447140	4059625470473	475
HG	73447670	4059625470466	475
HG	73447700	4059625470459	475
HG	73561000	4059625131503	652
HG	73620000	4059625474907	487
HG	73620140	4059625474891	487
HG	73620670	4059625474884	487
HG	73620700	4059625474877	487
HG	73622000	4059625470404	476
HG	73622140	4059625474860	476
HG	73622670	4059625470398	476
HG	73622700	4059625470381	476
HG	73816000	4059625176221	687
HG	73816800	4059625176207	687
HG	73817000	4059625176184	687
HG	73817800	4059625176177	687
HG	73818000	4059625176160	686
HG	73818340	4059625229590	686
HG	73818670	4059625232514	686
HG	73818800	4059625176153	686
HG	73819000	4059625255629	686
HG	73819800	4059625255612	686
HG	73820000	4059625255605	687
HG	73820800	4059625255599	687
HG	73822000	4059625255582	687
HG	73822800	4059625255575	687
HG	73830000	4059625255568	685
HG	73830670	4059625255186	685

Code Numbers (HG = hansgrohe, AX = AXOR)

brand	Code no.	EAN	page
HG	73830800	4059625255551	685
HG	73831000	4059625255179	684
HG	73831670	4059625255162	684
HG	73831800	4059625255155	684
HG	73836000	4059625269442	685
HG	73836670	4059625278093	685
HG	73836800	4059625269435	685
HG	73837000	4059625269428	684
HG	73837670	4059625278123	684
HG	73837800	4059625269411	684
HG	73850000	4059625017456	691
HG	73850800	4059625017449	691
HG	73851000	4059625017432	691
HG	73851800	4059625017425	691
HG	73867000	4059625176085	689
HG	73867800	4059625176078	689
HG	73868000	4059625176061	689
HG	73868800	4059625176054	689
HG	73876000	4059625198339	691
74			
HG	74800000	4059625339749	711
HG	74800670	4059625339763	711
HG	74800800	4059625339756	711
HG	74801000	4059625339770	711
HG	74801670	4059625339794	711
HG	74801800	4059625339787	711
HG	74802000	4059625340103	712
HG	74802670	4059625340127	712
HG	74802800	4059625340110	712
HG	74803000	4059625340134	711
HG	74803670	4059625340158	711
HG	74803800	4059625340141	711
HG	74804000	4059625340165	711
HG	74804670	4059625340189	711
HG	74804800	4059625340172	711
HG	74805000	4059625340196	713
HG	74806000	4059625340202	712
HG	74806670	4059625463444	712
HG	74806800	4059625463451	712
HG	74807000	4059625340219	714
HG	74808000	4059625340226	714
HG	74810000	4059625340233	711
HG	74811000	4059625340240	712
HG	74813000	4059625340264	713
HG	74813670	4059625544549	713
HG	74813800	4059625544532	713
HG	74820000	4059625464786	710
HG	74820670	4059625464779	710
HG	74820800	4059625464762	710
HG	74821000	4059625464755	710
HG	74821670	4059625464748	710
HG	74821800	4059625464731	710
HG	74822000	4059625464724	710
HG	74822670	4059625464717	710
HG	74822800	4059625464700	710
HG	74823000	4059625462898	710
HG	74823670	4059625462881	710
HG	74823800	4059625462874	710
75			
HG	75010000	4059625335246	490

brand	Code no.	EAN	page
HG	75010670	4059625335208	490
HG	75010700	4059625335161	490
HG	75012000	4059625335109	490
HG	75012670	4059625335086	490
HG	75012700	4059625335062	490
HG	75013000	4059625335048	492
HG	75013670	4059625335031	492
HG	75013700	4059625335024	492
HG	75014000	4059625555088	490
HG	75014670	4059625555057	490
HG	75014700	4059625555040	490
HG	75015000	4059625555033	490
HG	75015670	4059625555002	490
HG	75015700	4059625554999	490
HG	75020000	4059625334980	491
HG	75020670	4059625334942	491
HG	75020700	4059625334904	491
HG	75022000	4059625334843	491
HG	75022670	4059625334829	491
HG	75022700	4059625334805	491
HG	75023000	4059625399835	490
HG	75023670	4059625399828	490
HG	75023700	4059625399811	490
HG	75024000	4059625399804	491
HG	75024670	4059625399699	491
HG	75024700	4059625399682	491
HG	75030000	4059625334751	491
HG	75030670	4059625335727	491
HG	75030700	4059625335697	491
HG	75032000	4059625335659	492
HG	75032670	4059625335642	492
HG	75032700	4059625335635	492
HG	75033000	4059625322710	492
HG	75033670	4059625337387	492
HG	75033700	4059625337356	492
HG	75040000	4059625335598	491
HG	75040670	4059625335567	491
HG	75040700	4059625335536	491
HG	75042000	4059625335499	491
HG	75042670	4059625335468	491
HG	75042700	4059625335437	491
HG	75044000	4059625555132	491
HG	75044670	4059625555439	491
HG	75044700	4059625555422	491
HG	75045000	4059625555415	491
HG	75045670	4059625555361	491
HG	75045700	4059625555347	491
HG	75050000	4059625337318	493
HG	75050670	4059625337295	493
HG	75050700	4059625337271	493
HG	75200000	4059625335369	494
HG	75200670	4059625335345	494
HG	75200700	4059625335321	494
HG	75210000	4059625395240	493
HG	75410000	4059625322727	496
HG	75410670	4059625337219	496
HG	75410700	4059625337196	496
HG	75414000	4059625459737	389
HG	75414140	4059625482940	389
HG	75414670	4059625471593	389

brand	Code no.	EAN	page
HG	75414700	4059625471579	389
HG	75415000	4059625358504	495
HG	75415670	4059625358511	495
HG	75415700	4059625358528	495
HG	75416000	4059625358535	495
HG	75416670	4059625358542	495
HG	75416700	4059625358559	495
HG	75417000	4059625471555	388
HG	75417140	4059625482933	388
HG	75417670	4059625471524	388
HG	75417700	4059625471500	388
HG	75418000	4059625471470	386
HG	75418140	4059625482926	386
HG	75418670	4059625471432	386
HG	75418700	4059625471401	386
HG	75420000	4059625335291	495
HG	75420670	4059625335260	495
HG	75420700	4059625336199	495
HG	75444000	4059625322703	496
HG	75444670	4059625337080	496
HG	75444700	4059625337073	496
HG	75445000	4059625322697	494
HG	75445670	4059625337035	494
HG	75445700	4059625336991	494
HG	75614000	4059625471289	389
HG	75614140	4059625482889	389
HG	75614670	4059625471272	389
HG	75614700	4059625471265	389
HG	75615000	4059625358566	497
HG	75615670	4059625358573	497
HG	75615700	4059625358580	497
HG	75617000	4059625471258	387
HG	75617140	4059625482872	387
HG	75617670	4059625471241	387
HG	75617700	4059625471234	387
HG	75618000	4059625471227	386
HG	75618140	4059625482865	386
HG	75618670	4059625471197	386
HG	75618700	4059625471173	386
HG	75620000	4059625336151	497
HG	75620670	4059625336137	497
HG	75620700	4059625336113	497
76			
HG	76010000	4059625336083	456
HG	76010670	4059625334430	456
HG	76010700	4059625334447	456
HG	76013000	4059625335932	458
HG	76013670	4059625335925	458
HG	76013700	4059625335918	458
HG	76020000	4059625335871	456
HG	76020670	4059625334423	456
HG	76020700	4059625334416	456
HG	76023000	4059625335758	456
HG	76023670	4059625334409	456
HG	76023700	4059625334393	456
HG	76024000	4059625334461	456
HG	76024670	4059625334386	456
HG	76024700	4059625334379	456
HG	76033000	4059625338124	458
HG	76033670	4059625338094	458

brand	Code no.	EAN	page
HG	76033700	4059625338063	458
HG	76034000	4059625338025	458
HG	76034670	4059625337998	458
HG	76034700	4059625337967	458
HG	76050000	4059625337929	459
HG	76050670	4059625337899	459
HG	76050700	4059625337868	459
HG	76051000	4059625337820	459
HG	76051670	4059625337813	459
HG	76051700	4059625337806	459
HG	76060000	4059625336564	457
HG	76060670	4059625336557	457
HG	76060700	4059625336540	457
HG	76063000	4059625336533	457
HG	76063670	4059625336496	457
HG	76063700	4059625336441	457
HG	76070000	4059625334454	456
HG	76070670	4059625334362	456
HG	76070700	4059625334355	456
HG	76200000	4059625336823	460
HG	76200670	4059625336816	460
HG	76200700	4059625336809	460
HG	76210000	4059625395233	460
HG	76210670	4059625395226	460
HG	76220000	4059625395219	460
HG	76220670	4059625395202	460
HG	76410000	4059625337738	462
HG	76410670	4059625337714	462
HG	76410700	4059625337691	462
HG	76415000	4059625357637	461
HG	76415670	4059625357644	461
HG	76415700	4059625357651	461
HG	76416000	4059625357668	462
HG	76416670	4059625357675	462
HG	76416700	4059625357682	462
HG	76420000	4059625336793	461
HG	76420670	4059625336762	461
HG	76420700	4059625336731	461
HG	76444000	4059625337592	463
HG	76444670	4059625337585	463
HG	76444700	4059625337578	463
HG	76445000	4059625322734	460
HG	76445670	4059625337530	460
HG	76445700	4059625337493	460
HG	76615000	4059625357606	464
HG	76615670	4059625357613	464
HG	76615700	4059625357620	464
HG	76620000	4059625336694	463
HG	76620670	4059625336670	463
HG	76620700	4059625336656	463
HG	76800000	4059625391082	682
HG	76800670	4059625391105	682
HG	76800800	4059625391099	682
HG	76801000	4059625391112	682
HG	76801670	4059625391136	682
HG	76801800	4059625391129	682
HG	76802000	4059625391143	683
HG	76802670	4059625391167	683
HG	76802800	4059625391150	683
HG	76803000	4059625391174	682

Code Numbers (HG = hansgrohe, AX = AXOR)

brand	Code no.	EAN	page
HG	76803670	4059625391198	682
HG	76803800	4059625391181	682
HG	76804000	4059625391235	683
HG	76804670	4059625391259	683
HG	76804800	4059625391242	683
HG	76814000	4059625377734	720
HG	76815000	4059625377727	720
HG	76818000	4059625391419	720
HG	76826000	4059625391204	682
HG	76826670	4059625391228	682
HG	76826800	4059625391211	682
HG	76827000	4059625377710	720
HG	76828000	4059625377703	720
HG	76829000	4059625377390	720
HG	76830000	4059625377383	720
HG	76836000	4059625409855	680
HG	76836670	4059625409848	680
HG	76836800	4059625409831	680
HG	76837000	4059625409824	681
HG	76837670	4059625409817	681
HG	76837800	4059625409800	681
HG	76838000	4059625479117	680
HG	76838670	4059625479100	680
HG	76838800	4059625477496	680
92			
HG	92017000	4011097143477	774
HG	92175000	4011097739007	776
HG	92219000	4011097742113	774
HG	92373000	4011097767062	767
HG	92571450	4011097780931	367
HG	92571610	4011097781136	367
HG	92572450	4011097780948	367
HG	92572610	4011097781143	367
HG	92573450	4011097780955	366
HG	92573610	4011097781204	366
HG	92574450	4011097780979	367
HG	92574610	4011097781167	367
HG	92575450	4011097780986	367
HG	92575610	4011097781174	367
HG	92576450	4011097780993	367
HG	92576610	4011097781181	367
HG	92577450	4011097781105	367
HG	92577610	4011097781198	367
HG	92578450	4011097780962	367
HG	92578610	4011097781150	367
HG	92579450	4011097780924	366
HG	92579610	4011097781112	366
HG	92594000	4011097780344	776
HG	92601000	4011097133249	767
HG	92605000	4011097133287	775
HG	92631000	4011097133546	767
HG	92646000	4011097133720	770
HG	92730000	4011097222776	764
HG	92996000	4059625026632	766
93			
HG	93500000	4059625222478	400
HG	93571610	4059625142684	377
HG	93571670	4059625270134	377
HG	93571700	4059625270127	377
HG	93571880	4059625141892	377
HG	93573610	4059625142714	377
HG	93573670	4059625270097	377
HG	93573700	4059625270080	377
HG	93573880	4059625142615	377
HG	93574610	4059625142721	377
HG	93574670	4059625270073	377
HG	93574700	4059625270066	377
HG	93574880	4059625142622	377
HG	93575610	4059625142738	377
HG	93575670	4059625270059	377
HG	93575700	4059625270042	377
HG	93575880	4059625142639	377
HG	93576610	4059625142745	377
HG	93576670	4059625270035	377
HG	93576700	4059625270028	377
HG	93576880	4059625142646	377
HG	93577610	4059625142752	378
HG	93577670	4059625270011	378
HG	93577700	4059625270004	378
HG	93577880	4059625142653	378
HG	93578610	4059625142769	378
HG	93578670	4059625269992	378
HG	93578700	4059625269985	378
HG	93578880	4059625142660	378
HG	93579610	4059625142776	377
HG	93579670	4059625269978	377
HG	93579700	4059625269961	377
HG	93579880	4059625142677	377
94			
HG	94008000	4011097326849	768
HG	94009000	4011097326894	768
HG	94033000	4011097399256	766
HG	94074000	4011097242606	773
HG	94077000	4011097345024	769
HG	94108000	4011097177113	772
HG	94139000	4011097178752	311
HG	94139140	4011097949062	311
HG	94139340	4011097949048	311
HG	94139670	4059625308943	311
HG	94139700	4059625304327	311
HG	94139990	4011097949208	311
HG	94142000	4011097183800	768
HG	94148000	4011097177120	771
HG	94149000	4011097178745	768
HG	94246000	4011097134888	770
HG	94282000	4011097239040	766
95			
HG	95014000	4011097404332	769
HG	95093000	4011097262321	772
HG	95239000	4011097611686	771
HG	95282000	4011097633152	766
HG	95455000	4011097642864	765
HG	95506000	4011097646107	775
HG	95507000	4011097646114	776
HG	95758000	4011097730738	769
96			
HG	96026000	4011097136011	772
HG	96083000	4011097136264	771
HG	96094000	4011097183251	776
HG	96100000	4011097136547	774

brand	Code no.	EAN	page
HG	96146000	4011097270388	772
HG	96153000	4011097136745	771
HG	96153130	4011097971353	771
HG	96170000	4011097136844	763
HG	96189000	4011097176482	773
HG	96190000	4011097176499	763
HG	96190880	4011097363707	763
HG	96326000	4011097380575	765
HG	96339000	4011097363295	764
HG	96370000	4011097345000	411
HG	96445000	4011097400228	770
HG	96454000	4011097395968	772
HG	96509000	4011097439914	769
HG	96615000	4011097391502	400
HG	96618000	4011097441245	774
HG	96633000	4011097450681	767
HG	96645000	4011097445366	769
HG	96783000	4011097477077	764
HG	96922000	4011097491240	772
97			
HG	97204000	4011097579801	773
HG	97205000	4011097654805	772
HG	97206000	4011097529523	775
HG	97350000	4011097500041	775
HG	97651000	4011097504520	763
HG	97685000	4011097592824	764
HG	97999000	4011097541174	774
98			
HG	98058000	4011097137711	771
HG	98127000	4011097500157	774
HG	98133000	4011097500133	771
HG	98189000	4011097516714	774
HG	98282000	4011097606460	767
HG	98283000	4011097606453	768
HG	98371000	4011097716268	775
HG	98520000	4011097599489	763
HG	98702000	4011097605494	771
HG	98753000	4011097554235	763
HG	98804000	4011097568744	765
HG	98996000	4011097592817	775

Showers

Showers	Hand showers	51
	Shower sets	73
	Shower bars	111
	Shower holder sets	125
	Shower holders	141
	Shower hoses	149
	Overhead showers	155
	Showerpipes & shower panels	215
	Drains	265
	Wastes & overflows	299
Thermostatic mixers	Thermostats exposed installation	319
	Thermostats concealed installation	341
Installation	Basic sets	391

Hand showers

Hand showers

	Rainfinity		Raindance Select S	Raindance Select E	Pulsify Planet Edition
Finish					
Shower head size	130	100	120/150	120	105
Flowrate	8.5/14	9/13.8	5.7 - 15	8.5/14.4	5.7
EcoSmart+	–	–	■	■	■
EcoSmart	■	■	■	■	–
Select	■	–	■	■	■
QuickClean	■	■	■	■	■
AirPower	–	–	■	■	–
Number of sprays	3	1	3	3	3
PowderRain	■	■	■	■	■
IntensePowderRain	■	–	–	–	–
Rain	–	–	■	■	–
IntenseRain	–	–	–	–	■
MonoRain	■	–	–	–	–
from page	59	60	61	62	63

	Crometta	Crometta 85	Vernis Blend	Jocolino	
Finish					
Shower head size	100	85	100	27	27
Flowrate	5.7/6.7	6 - 17	5.4/6.7	11	11
EcoSmart+	■	■	■	–	–
EcoSmart	■	–	■	–	–
Select	–	–	–	–	–
QuickClean	■	■	■	–	–
AirPower	–	–	–	–	–
Number of sprays	1/2	1 - 3	2	2	2
PowderRain	–	–	–	–	–
IntensePowderRain	–	–	–	–	–
Rain	■	–	■	■	■
IntenseRain	■	–	■	–	–
MonoRain	–	■	–	■	■
from page	68	69	69	70	70

■ available depending on the model
– not available

	Pulsify Select S / Pulsify S	Pulsify S / Pulsify E	Croma Select S / Croma S	Croma Select E / Croma E	Croma 100
Finish					
Shower head size	105	100	110	110	100
Flowrate	5.7 - 13.5	5 - 8	7 - 16	7 - 16	9/18
EcoSmart+	■	■	■	■	–
EcoSmart	■	■	■	■	■
Select	■	–	■	■	–
QuickClean	■	■	■	■	■
AirPower	–	–	–	–	–
Number of sprays	1/3	1	1/3	1/3	4
PowderRain	■	■	–	–	–
IntensePowderRain	–	–	–	–	–
Rain	–	–	■	■	■
IntenseRain	■	–	■	■	–
MonoRain	■	–	–	–	–
from page	64	65	66	67	68

	Jocolino	DogShower
Finish		
Shower head size	27	150
Flowrate	11	7.6
EcoSmart+	–	–
EcoSmart	–	■
Select	–	■
QuickClean	–	–
AirPower	–	–
Number of sprays	2	3
PowderRain	–	–
IntensePowderRain	–	–
Rain	■	–
IntenseRain	–	–
MonoRain	■	–
from page	70	71

Sustainability

EcoSmart+

With a consumption of up to 60% less water than our conventional models, this shower is particularly efficient and economical, reducing water and energy costs every day and conserving valuable resources.

EcoSmart

This shower head uses up to 40% less water than our conventional showers. In this way, it reduces water and energy costs every day and conserves valuable resources. For long-lasting soothing showering pleasure.

Technologies

Select

The Select push button simplifies daily bathroom routines, as one simple push is all it takes for water to flow or stop. When showering, the user-friendly button can change the spray type or switch from the overhead to the hand shower.

QuickClean

On the ergonomic children's hand shower, limescale deposits and dirt disappear in no time at all. That is, when the shower head is turned to change the spray type. The nozzles clean themselves as if by magic.

QuickClean

Who actually likes cleaning? Limescale deposits and dirt disappear in an instant with this technology. Simply rub the flexible silicone discs or nozzles with a finger. It's fast and keeps cleaning to a minimum.

Technologies

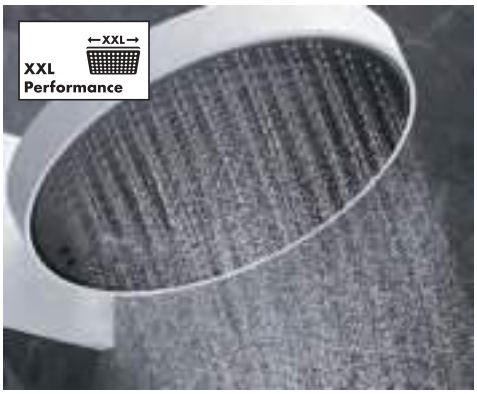

WaterBoost

If more water is needed for showering and cleaning routines, the amount of water can be increased. To temporarily increase the flow rate, press and hold the side boost button.

XXL Performance

XXL showering indulgence that envelops the complete body in real-life dreams of water using wonderfully soothing spray types from hand showers and overhead showers with diameters of 100 to 600 mm.

AirPower

Mixes generous quantities of air into the water to create light, pearl-like droplets that caress the skin. The shower feels luxurious, even though little water is consumed. The spray causes less splash, reducing the time to clean the shower area.

Spray types

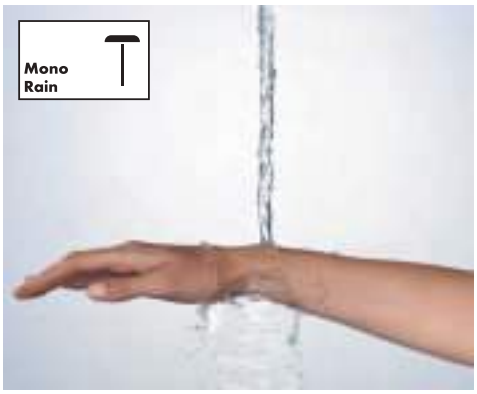

Mix

Harmonious combination of gentle shower rain and dynamic massage spray. The soft and the powerful sprays flow together here for an exciting mix of soft strokes on the outside and a massage in the middle.

MonoRain

Focused and extremly gentle spray for feel-good wellness. The focused spray type is perfect for hydrotherapeutic showering and cold water treatments. For anyone who loves winding down in their shower or bath tub.

Normal

Versatile shower spray day in, day out. The shower rain pampers with full, light, rich droplets. The full water spray is great for washing hair and rinsing out shampoo.

Spray types

PawSpray

Fast cleaning of dirty paws for your exploring four-legged friends. The jet is particularly soft and rinses off dirt gently and thoroughly. A treat for the animal and a stress-free routine for humans.

PowderRain

Relaxing, micro-fine droplets that gently and quietly envelop the body. The water is transformed into a delicate cocoon that sensually embraces the body. For sensual showering and indulgent, deep relaxation.

CaresseAir

Rotating sprays that ensure lovely relaxation. The individual sprays flow into each other, resulting in a powerful, invigorating massage spray. The perfect antidote to exercise or a stressful day.

Rain

Invigorating and energising everyday showering indulgence with a satisfyingly full shower rain. With its small outlets on the shower head, this spray type works efficiently to thoroughly rinse out shampoo.

RainAir

Gentle droplets enriched with air from the luxurious shower rain feel silky soft on the skin for an indulgent shower. Additionally, this spray type is efficient and thorough enough to rinse out shampoo.

Shampoo

Intense water spray that rinses out shampoo in no time at all. And not only that: The highly efficient spray invigorates the body and mind in the mornings or after exercise. For wellness all year round.

Spray types

SoftRain

Caressing water sprays that gently swirl around the body. An act of kindness for the skin, mind and soul. A perfectly smooth way to wake up in the morning, recover after exercise or wash off the stresses of a challenging day.

TurboRain

An invigorating multi-purpose spray that lives up to its name. With Turbo, the rain sprays ensure powerful, soothing showering. Perfect for those who want a quick and straightforward way to refresh themselves.

FurSpray

Spray type for dogs, which provides thorough cleaning of the fur deep into the undercoat. The full shower spray helps to rinse out dog shampoo and tackles even stubborn dirt.

Whirl

Rotating water sprays to pleasantly shower away everyday tensions. Individual sprays of water flow around each other in a helical pattern, helping to relieve tension with their gentle massaging action.

Intense PowderRain

Intense spray consisting of micro-fine droplets. The number of droplets is much higher for an extremely effective way to rinse out shampoo. The water feels velvety soft and ultra-lightweight on the skin, with very little splashback.

IntenseRain

Stimulating water sprays that wash away tiredness and immediately make the person feel nice and awake. The perfect and quick way to feel fit for the day ahead. The powerful spray also effortlessly rinses shampoo out of hair.

Spray types

LegSpray

Soothing spray made for a gentle and pleasant showering of the dog's legs. Cleans even the most sensitive areas particularly thoroughly. A real treat for every four-legged friend.

Massage

An invigorating spray that soothes and causes everyday stresses to flow down the drain. The water sprays are concentrated to ease tense spots. For an indulgent and relaxing spa-like shower, every single day.

Finish

Black

-000

Brushed Black Chrome

-340

Brushed Bronze

-140

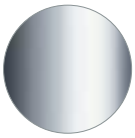

Chrome

-000

Matt Black

-670

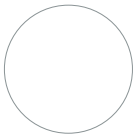

Matt White

-700

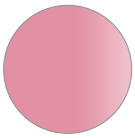

Pink

-560

Polished Gold Optic

-990

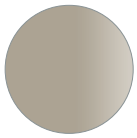

Sand (recycled)

-210

Sky Blue

-540

White/ Chrome

-400

Rainfinity Hand showers 3jet

Features of all variants

- spray type: PowderRain, Intense PowderRain, MonoRain
- convenient spray selection via Select button
- spray disc surface: easy cleanable aluminium spray disc, graphite
- with internal water conduction
- rinseable screen seal
- connection thread: G ½
- suitable for continous flow water heaters

130

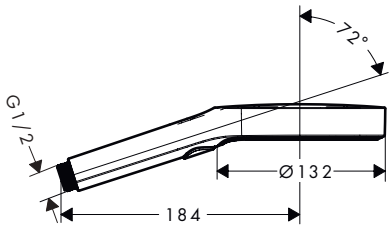

Sustainability

EcoSmart

Technologies

Select · Quick Clean · XXL Performance

Spray types

Intense Powder Rain · Mono Rain · Powder Rain

Certificates/declarations

EPD

Overview variants

Shower head size	Number of sprays	Spray types	Max. flow rate at 3 bar (l/min)	Min. flow pressure (bar)	Finish	Code no.
130	3	PowderRain, Intense PowderRain, MonoRain	8.5	1.5	Chrome	26865000
					Brushed Bronze	26865140
					Brushed Black Chrome	26865340
					Matt Black	26865670
					Matt White	26865700
					Polished Gold Optic	26865990
130	3	PowderRain, Intense PowderRain, MonoRain	14	1.1	Chrome	26864000
					Brushed Bronze	26864140
					Brushed Black Chrome	26864340
					Matt Black	26864670
					Matt White	26864700
					Polished Gold Optic	26864990

Measurements within scale drawings are in mm.
Technical specifications and units of measure are subject to change.

Rainfinity Baton hand showers 1jet

Features of all variants

- spray type: PowderRain
- spray disc surface: easy cleanable aluminium spray disc, graphite
- minimum flow pressure: 1 bar
- with internal water conduction
- rinseable screen seal
- connection thread: G ½
- suitable for continous flow water heaters

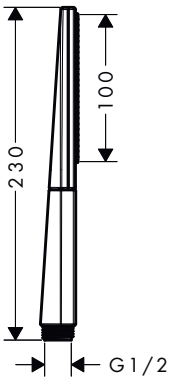

Sustainability

EcoSmart

Technologies

Quick Clean

Spray types

Powder Rain

Overview variants

Shower head size	Number of sprays	Spray types	Max. flow rate at 3 bar (l/min)	Min. flow pressure (bar)	Finish	Code no.
100	1	PowderRain	9	1	Chrome	26867000
					Brushed Bronze	26867140
					Brushed Black Chrome	26867340
					Matt Black	26867670
					Matt White	26867700
					Polished Gold Optic	26867990
100	1	PowderRain	13.8	1	Chrome	26866000
					Brushed Bronze	26866140
					Brushed Black Chrome	26866340
					Matt Black	26866670
					Matt White	26866700
					Polished Gold Optic	26866990

Measurements within scale drawings are in mm.
Technical specifications and units of measure are subject to change.

Raindance Select S Hand showers 3jet

Features of all variants

- convenient spray selection via Select button
- spray disc surface: easy cleanable plastic spray disc
- with internal water conduction
- rinseable screen seal
- connection thread: G ½
- suitable for continous flow water heaters

150

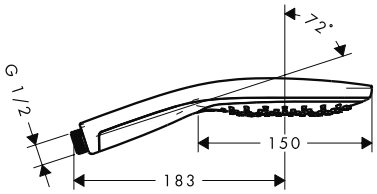

120

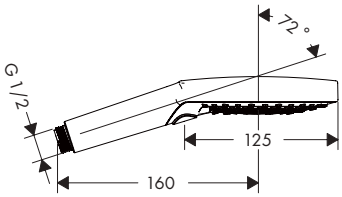

Sustainability

EcoSmart · Eco Smart+

Technologies

Select · AirPower · Quick Clean · XXL Performance

Spray types

Caresse Air · Mix · Powder Rain · Rain · Rain Air · Whirl

Certificates/declarations

EPD

Overview variants

Shower head size	Number of sprays	Spray types	Max. flow rate at 3 bar (l/min)	Min. flow pressure (bar)	Finish	Available from	Code no.
150	3	RainAir, CaresseAir, Mix	8.8	2.2	Chrome		28588000
					White/Chrome		28588400
120	3	PowderRain, Rain, Whirl	5.7	1.5	Chrome		26516000
					Brushed Bronze	Q1/2025	26516140
					Brushed Black Chrome	Q1/2025	26516340
					Matt Black	Q1/2025	26516670
					Matt White	Q1/2025	26516700
					Polished Gold Optic	Q1/2025	26516990
120	3	PowderRain, Rain, Whirl	8.3	1.4	Chrome		26515000
					Brushed Bronze	Q1/2025	26515140
					Brushed Black Chrome	Q1/2025	26515340
					Matt Black	Q1/2025	26515670
					Matt White	Q1/2025	26515700
					Polished Gold Optic	Q1/2025	26515990
120	3	PowderRain, Rain, Whirl	11	1.2	Chrome		26014000
					Brushed Bronze		26014140
					Brushed Black Chrome		26014340
					Matt Black		26014670
					Matt White		26014700
					Polished Gold Optic		26014990
120	3	Rain, RainAir, Whirl	8.5	1.5	Chrome		26531000
					Brushed Bronze		26531140
					Brushed Black Chrome		26531340
					White/Chrome		26531400
					Matt Black		26531670
					Matt White		26531700
					Polished Gold Optic		26531990

For more information about this product, please see the next page.

Measurements within scale drawings are in mm.
Technical specifications and units of measure are subject to change.

Raindance Select S Hand showers 3jet

Overview variants

Shower head size	Number of sprays	Spray types	Max. flow rate at 3 bar (l/min)	Min. flow pressure (bar)	Finish	Available from	Code no.
120	3	Rain, RainAir, Whirl	15	1.4	Chrome		26530000
					Brushed Bronze		26530140
					Brushed Black Chrome		26530340
					White/Chrome		26530400
					Matt Black		26530670
					Matt White		26530700
					Polished Gold Optic		26530990

Raindance Select E Hand showers 3jet

Features of all variants

- shower head size: 120 mm
- convenient spray selection via Select button
- spray disc surface: easy cleanable plastic spray disc
- with internal water conduction
- rinseable screen seal
- connection thread: G ½
- suitable for continous flow water heaters

120

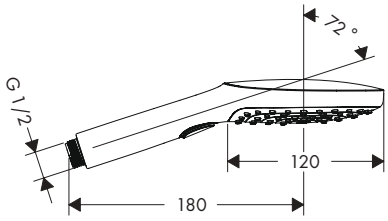

Sustainability

EcoSmart | Eco Smart+

Technologies

Select | AirPower | Quick clean | XXL Performance

Spray types

Powder Rain | Rain | Rain Air | Whirl

Certificates/declarations

EPD

Overview variants

Shower head size	Number of sprays	Spray types	Max. flow rate at 3 bar (l/min)	Min. flow pressure (bar)	Finish	Available from	Code no.
120	3	PowderRain, Rain, RainAir		1.5	Chrome	Q2/2025	28729000
					Brushed Bronze	Q2/2025	28729140
					Brushed Black Chrome	Q2/2025	28729340
					Matt Black	Q2/2025	28729670
					Matt White	Q2/2025	28729700
					Polished Gold Optic	Q2/2025	28729990
120	3	PowderRain, Rain, RainAir		1.5	Chrome	Q2/2025	28728000
					Brushed Bronze	Q2/2025	28728140
					Brushed Black Chrome	Q2/2025	28728340
					Matt Black	Q2/2025	28728670
					Matt White	Q2/2025	28728700
					Polished Gold Optic	Q2/2025	28728990
120	3	Rain, RainAir, Whirl	8.5	1.5	Chrome		26521000
					White/Chrome		26521400

Measurements within scale drawings are in mm.
Technical specifications and units of measure are subject to change.

Raindance Select E Hand showers 3jet

Overview variants

Shower head size	Number of sprays	Spray types	Max. flow rate at 3 bar (l/min)	Min. flow pressure (bar)	Finish	Available from	Code no.
120	3	RainAir, Rain, Whirl	14.4	1	Chrome		26520000
					Brushed Bronze		26520140
					Brushed Black Chrome		26520340
					White/Chrome		26520400
					Matt Black		26520670
					Matt White		26520700
					Polished Gold Optic		26520990

Pulsify Planet Edition Hand shower 105 3jet Relaxation EcoSmart+ Select

Features

- shower head size: 105 mm
- spray type: PowderRain, IntenseRain, Massage spray
- convenient spray selection via Select button
- spray disc surface: graphite
- maximum flow rate at 3 bar: 5,7 l/min
- minimum flow pressure: 1 bar
- with internal water conduction
- rinseable sieve insert
- connection thread: G ½
- suitable for continous flow water heaters
- EU taxonomy: max. 6 l/min - Substantial Contribution (SC) possible

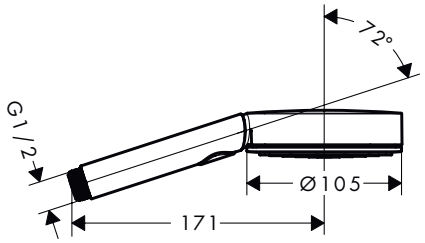

Sustainability

Technologies

Spray types

Finish	Code no.
Sand (recycled)	26077210

Measurements within scale drawings are in mm.
Technical specifications and units of measure are subject to change.

Pulsify Select S / Pulsify S Hand showers 3jet, 1jet

Features of all variants

- shower head size: 105 mm
- spray disc surface: graphite
- with internal water conduction
- rinseable sieve insert
- connection thread: G ½
- suitable for continous flow water heaters

Relaxation

Activation

1jet

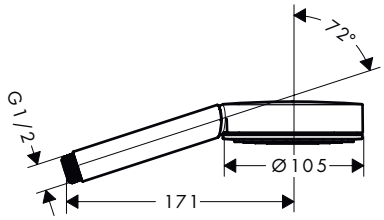

Sustainability

Technologies

Spray types

Overview variants

Shower head size	Shower effect	Number of sprays	Spray types	Max. flow rate at 3 bar (l/min)	Min. flow pressure (bar)	Select	Finish	Code no.
105	Relaxation	3	PowderRain, IntenseRain, Massage spray	6.9	1.6	■	Chrome	24111000
							Brushed Bronze	24111140
							Matt Black	24111670
							Matt White	24111700
105	Relaxation	3	PowderRain, IntenseRain, Massage spray	11.4	0.9	■	Chrome	24110000
							Brushed Bronze	24110140
							Matt Black	24110670
							Matt White	24110700
105	Activation	3	PowderRain, IntenseRain, MonoRain	6.9	1.6	■	Chrome	24101000
							Matt Black	24101670
							Matt White	24101700
105	Activation	3	PowderRain, IntenseRain, MonoRain	11.5	0.8	■	Chrome	24100000
							Matt Black	24100670
							Matt White	24100700
105	1jet	1	PowderRain	5.7	1	–	Chrome	24121000
							Matt Black	24121670
							Matt White	24121700
105	1jet	1	PowderRain	13.5	0.6	–	Chrome	24120000
							Matt Black	24120670
							Matt White	24120700

Measurements within scale drawings are in mm.
Technical specifications and units of measure are subject to change.

Pulsify S / Pulsify E Baton hand showers 1jet

Features of all variants

- spray type: PowderRain
- with internal water conduction
- rinseable sieve insert
- connection thread: G ½
- suitable for continous flow water heaters

round

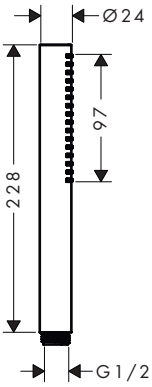

square

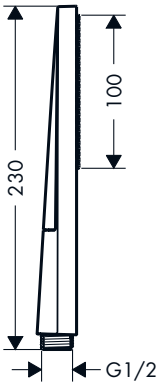

Sustainability

EcoSmart | Eco Smart+

Technologies

Quick Clean

Spray types

Powder Rain

Overview variants

Shower head size	Number of sprays	Spray types	Max. flow rate at 3 bar (l/min)	Min. flow pressure (bar)	Shape	Finish	Available from	Code no.
100	1	PowderRain	5.4	0.5	round	Chrome		24126000
						Brushed Bronze		24126140
						Matt Black		24126670
						Brushed Black Chrome		24126340
						Matt White		24126700
						Polished Gold Optic		24126990
100	1	PowderRain	7.9	0.5	round	Chrome		24125000
						Brushed Bronze		24125140
						Matt Black		24125670
						Brushed Black Chrome		24125340
						Matt White		24125700
						Polished Gold Optic		24125990
100	1	PowderRain	5	0.9	square	Chrome		24321000
						Brushed Bronze		24321140
						Matt Black		24321670
						Brushed Black Chrome	Q1/2025	24321340
						Matt White		24321700
						Polished Gold Optic	Q1/2025	24321990
100	1	PowderRain	8	0.8	square	Chrome		24320000
						Brushed Bronze		24320140
						Matt Black		24320670
						Brushed Black Chrome	Q1/2025	24320340
						Matt White		24320700
						Polished Gold Optic	Q1/2025	24320990

Measurements within scale drawings are in mm.
Technical specifications and units of measure are subject to change.

Croma Select S / Croma S Hand showers Multi, Vario, 1jet

Features of all variants

- shower head size: 110 mm
- spray disc surface: easy cleanable plastic spray disc, white
- with internal water conduction
- rinseable screen seal
- connection thread: G ½
- suitable for continous flow water heaters

Multi

Vario

1jet

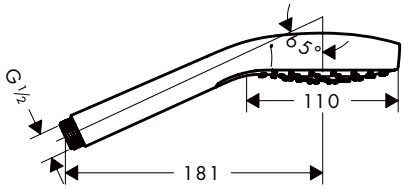

Sustainability

Technologies

Spray types

Certificates/declarations

Overview variants

Version	Shower head size	Spray types	Max. flow rate at 3 bar (l/min)	Min. flow pressure (bar)	Select	Finish	Code no.
Multi	110	SoftRain, IntenseRain, Massage spray	9	1.4	■	White/Chrome	26801400
Multi	110	SoftRain, IntenseRain, Massage spray	16	1	■	White/Chrome	26800400
Vario	110	Rain, TurboRain, IntenseRain	9	1.4	■	White/Chrome	26803400
Vario	110	Rain, IntenseRain, TurboRain	14.7	1	■	White/Chrome	26802400
1jet	110	Rain	7	1.2	–	White/Chrome	26806400
1jet	110	Rain	9	1	–	White/Chrome	26805400
1jet	110	Rain	16	0.8	–	White/Chrome	26804400

Measurements within scale drawings are in mm.
Technical specifications and units of measure are subject to change.

Croma Select E / Croma E Hand showers Multi, Vario, 1jet

Features of all variants

- shower head size: 110 mm
- spray disc surface: easy cleanable plastic spray disc, white
- with internal water conduction
- rinseable screen seal
- connection thread: G ½
- suitable for continous flow water heaters

Multi

Vario

1jet

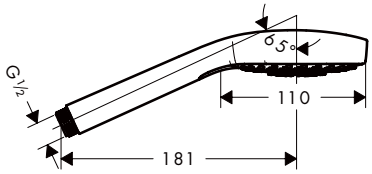

Sustainability

EcoSmart | Eco Smart+

Technologies

Select | Quick Clean | XXL Performance

Spray types

Intense Rain | Massage | Rain | SoftRain | Turbo Rain

Certificates/declarations

EPD

Overview variants

Version	Shower head size	Spray types	Max. flow rate at 3 bar (l/min)	Min. flow pressure (bar)	Select	Finish	Code no.
Multi	110	SoftRain, IntenseRain, Massage spray	9	1.4	■	White/Chrome	26811400
Multi	110	SoftRain, IntenseRain, Massage spray	16	1	■	White/Chrome	26810400
Vario	110	Rain, TurboRain, IntenseRain	9	1.2	■	White/Chrome	26813400
Vario	110	Rain, IntenseRain, TurboRain	14.7	1	■	White/Chrome	26812400
1jet	110	Rain	7	1.2	–	White/Chrome	26816400
1jet	110	Rain	9	1	–	White/Chrome	26815400
						Matt Black	26815670
						Matt White	26815700
						Brushed Black Chrome	26815340
						Polished Gold Optic	26815990

Measurements within scale drawings are in mm.
Technical specifications and units of measure are subject to change.

Croma 100 Hand showers Vario

Features of all variants

- shower head size: 100 mm
- spray type adjustment by turning spray disc
- spray disc surface: grey
- minimum flow pressure: 1 bar
- with internal water conduction
- rinseable screen seal
- connection thread: G ½
- suitable for continous flow water heaters

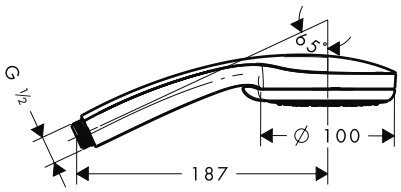

Sustainability

EcoSmart

Technologies

Quick Clean, XXL Performance

Spray types

Massage, Normal, Rain, Shampoo

Certificates/declarations

EPD

Overview variants

Version	Shower head size	Number of sprays	Spray types	Max. flow rate at 3 bar (l/min)	Min. flow pressure (bar)	Finish	Code no.
Vario	100	4	Rain, Shampoo spray, normal spray, Massage spray	9	1	Chrome	28537000
Vario	100	4	Rain, normal spray, Shampoo spray, Massage spray	18	1	Chrome	28535000

Crometta Hand showers Vario, 1jet

Features of all variants

- shower head size: 100 mm
- spray disc surface: easy cleanable plastic spray disc
- minimum flow pressure: 1 bar
- with internal water conduction
- rinseable screen seal
- connection thread: G ½
- suitable for continous flow water heaters

Vario

1jet

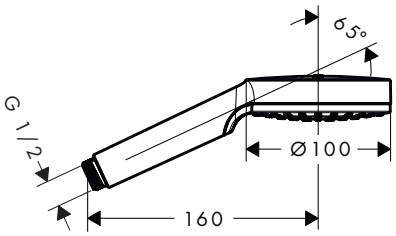

Sustainability

EcoSmart, Eco Smart+

Technologies

Quick Clean, XXL Performance

Spray types

Intense Rain, Rain

Certificates/declarations

EPD

Overview variants

Version	Shower head size	Number of sprays	Spray types	Max. flow rate at 3 bar (l/min)	Min. flow pressure (bar)	Finish	Code no.
Vario	100	2	Rain, IntenseRain	5.7	1	White/Chrome	26336400
Vario	100	2	Rain, IntenseRain	6.7	1	White/Chrome	26332400
1jet	100	1	Rain	5.7	1	White/Chrome	26334400
1jet	100	1	Rain	6.7	1	White/Chrome	26333400

Measurements within scale drawings are in mm.
Technical specifications and units of measure are subject to change.

Crometta 85 Hand showers Multi, Vario, 1jet

Features of all variants

- shower head size: 85 mm
- spray disc surface: grey
- minimum flow pressure: 1 bar
- with internal water conduction
- rinseable screen seal
- connection thread: G ½
- suitable for continous flow water heaters

Multi

Vario

1jet

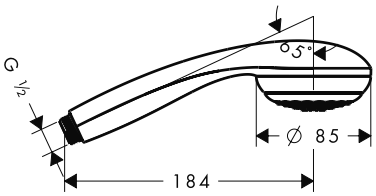

Sustainability

Eco Smart+

Technologies

Quick Clean

Spray types

Massage, Mono Rain, Normal

Certificates/declarations

EPD

Overview variants

Version	Shower head size	Number of sprays	Spray types	Max. flow rate at 3 bar (l/min)	Min. flow pressure (bar)	Finish	Code no.
Multi	85	3	normal spray, Massage spray, MonoRain	16	1	Chrome	28563000
Vario	85	2	normal spray, Vario spray	17	1	Chrome	28562000
Mono	85	1	normal spray	6	1	Chrome	28561000
Mono	85	1	normal spray	16	1	Chrome	28585000

Vernis Blend Hand showers Vario

Features of all variants

- shower head size: 100 mm
- spray type: Rain, IntenseRain
- spray type adjustment by turning spray disc
- spray disc surface: easy cleanable plastic spray disc
- minimum flow pressure: 1 bar
- with internal water conduction
- rinseable screen seal
- connection thread: G ½
- suitable for continous flow water heaters

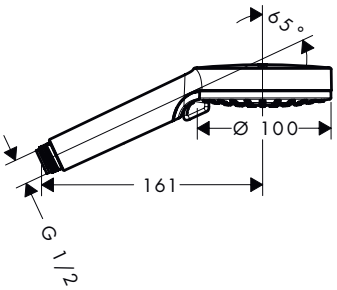

Sustainability

EcoSmart, Eco Smart+

Technologies

Quick Clean, XXL Performance

Spray types

Intense Rain, Rain

Certificates/declarations

EPD

Overview variants

Shower head size	Number of sprays	Spray types	Max. flow rate at 3 bar (l/min)	Min. flow pressure (bar)	Finish	Code no.
100	2	Rain, IntenseRain	5.4	1	Chrome	26090000

For more information about this product, please see the next page.

Measurements within scale drawings are in mm.
Technical specifications and units of measure are subject to change.

Vernis Blend Hand showers Vario

Overview variants

Shower head size	Number of sprays	Spray types	Max. flow rate at 3 bar (l/min)	Min. flow pressure (bar)	Finish	Code no.
100	2	Rain, IntenseRain	6.7	1	Chrome	26340000
					Matt Black	26340670

Jocolino Children hand showers 2jet

Features of all variants

- shower head size: 27 mm
- spray type: Rain, MonoRain
- switch spray type by turning the shower head
- maximum flow rate at 3 bar: 11 l/min
- minimum flow pressure: 0,8 bar
- ergonomic handle perfect for smaller hands
- googly eyes that interact with the kid
- limescale residues on the jets are removed by the rotation when changing spray modes
- with internal water conduction
- rinseable screen seal
- connection thread: G ½
- suitable for continous flow water heaters

Lion

Zebra

Crocodile

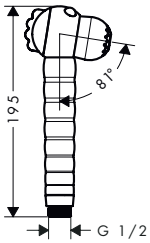

Technologies

Spray types

Overview variants

Version	Shower head size	Number of sprays	Spray types	Max. flow rate at 3 bar (l/min)	Min. flow pressure (bar)	Code no.
Lion	27	2	Rain, MonoRain	11	0.8	28760210
Zebra	27	2	Rain, MonoRain	11	0.8	28787640
Crocodile	27	2	Rain, MonoRain	11	0.8	28788570

Optional parts:		Finish	Code no.
	Quick-coupling set	Black	28346000

Measurements within scale drawings are in mm.
Technical specifications and units of measure are subject to change.

DogShower Dogs hand shower 150 3jet Select

Features

- shower head size: 150 x 63 mm
- spray type: fur spray, leg spray, paw spray
- convenient spray selection via Select button
- maximum flow rate at 3 bar: 7,6 l/min
- function from: 5,7 l/min
- operating pressure: min. 1 bar/max. 6 bar
- minimum flow pressure: 1 bar
- elongated, brush-like nozzles (1,5 cm) for thorough cleaning with massage effect
- ergonomic design
- Water Boost: boost function to increase waterflow when needed
- suitable for continous flow water heaters
- connection dimension: DN15
- rinseable screen seal
- non-return valve
- EU taxonomy: max. 8 l/min - Do No Significant Harm (DNSH)

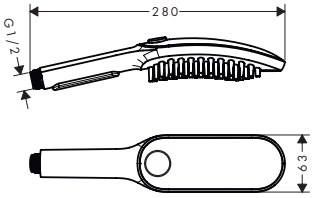

Sustainability

EcoSmart

Technologies

Select, Water Boost

Spray types

Fur Spray, Leg Spray, Paw Spray

Finish	Code no.
Matt White	26640700
Matt Black	26640670
Sky Blue	26640540
Pink	26640560

Optional parts:		Finish	Code no.
	Quick-coupling set	Black	28346000

Quick-coupling set

Features

- enables quick and easy changing of hand showers
- material: plastic
- connection dimension: DN15

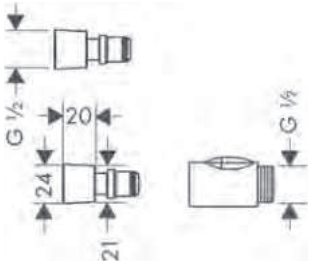

Finish	Code no.
Black	28346000

Shower sets

Shower sets

	Rainfinity		Raindance Select S		
Finish					
Version	65/90	90/150	65/90	110	65/90
Shower head size	130	130	120	120	120
Flowrate	8.5/14	8.5/14	8.5 - 15	15	8.5/15
EcoSmart+	–	–	–	–	–
EcoSmart	■	■	■	–	■
QuickClean	■	■	■	■	■
Number of sprays	3	3	3	3	3
PowderRain	■	■	■	–	–
IntensePowderRain	■	■	–	–	–
Rain	–	–	■	■	■
RainAir	–	–	■	■	■
from page	82	83	84	85	86

	Croma Select S	Croma Select E	Croma 100	Crometta	Crometta 85
Finish					
Version	65 1jet, 65 Multi, 65 Vario, 90 1jet, 90 Multi, 90 Vario	65 1jet, 65 Multi, 65 Vario, 90 1jet, 90 Multi, 90 Vario	65 Vario/90 Vario	65 1jet, 65 Vario, 90 1jet, 90 Vario	65 1jet, 65 Vario, 90 1jet, 90 Multi, 90 Vario
Shower head size	110	110	100	100	85
Flowrate	9 - 16	9 - 16	9/18	5.7 - 13.8	6 - 17
EcoSmart+	–	–	–	■	■
EcoSmart	■	■	■	■	–
QuickClean	■	■	■	■	■
Number of sprays	1/3	1/3	4	1/2	1 - 3
PowderRain	–	–	–	–	–
IntensePowderRain	–	–	–	–	–
Rain	■	■	■	■	–
RainAir	–	–	–	–	–
from page	93	94	95	96	97

■ available depending on the model
– not available

	Raindance Select S	Raindance Select E	Pulsify Select S	Pulsify S	Pulsify E
Finish					
Version	90/150	65/90	65/90	65/90	65/90
Shower head size	120	120	105	100	100
Flowrate	8.5/15	8.5/14.4	6.9/11.4	5.4/8.5	5/8
EcoSmart+	–	–	–	■	■
EcoSmart	■	■	■	■	■
QuickClean	■	■	■	■	■
Number of sprays	3	3	3	1	1
PowderRain	–	–	■	■	■
IntensePowderRain	–	–	–	–	–
Rain	■	■	–	–	–
RainAir	■	■	–	–	–
from page	88	89	91	90	92

	Vernis Blend	
Finish		
Version	65	65
Shower head size	100	100
Flowrate	6.7	6.7
EcoSmart+	–	–
EcoSmart	■	■
QuickClean	■	■
Number of sprays	2	2
PowderRain	–	–
IntensePowderRain	–	–
Rain	■	■
RainAir	–	–
from page	98	99

Shower systems

	Raindance Select E	Pulsify Select S			Croma Select S
Finish					
Version	65/90	65/90	65/90	65/90	65 Vario/90 Vario
Shower head size	120	105	105	105	110
Flowrate	14.4	6.4/8.2	8.2	11.4	14.7
EcoSmart+	–	–	–	–	–
EcoSmart	–	■	■	–	–
QuickClean	■	■	■	■	■
Number of sprays	3	3	3	3	3
PowderRain	–	■	■	■	–
IntensePowderRain	–	–	–	–	–
Rain	■	–	–	–	■
RainAir	■	–	–	–	–
Single lever mixer	–	–	–	–	–
Thermostat	■	■	■	■	■
from page	101	102	103	104	105

	Vernis Blend
Finish	
Version	65
Shower head size	100
Flowrate	9.7
EcoSmart+	–
EcoSmart	■
QuickClean	■
Number of sprays	2
PowderRain	–
IntensePowderRain	–
Rain	■
RainAir	–
Single lever mixer	–
Thermostat	■
from page	110

■ available depending on the model
– not available

	Croma Select S	Croma Select E	Croma 100	Crometta	Vernis Blend
Finish					
Version	72	65 Vario/90 Vario	90 Multi	65 Vario/90 Vario	65
Shower head size	110	110	100	100	100
Flowrate	14.7	14.7	19	13.8	6.7/9.7
EcoSmart+	–	–	–	–	–
EcoSmart	–	–	–	–	■
QuickClean	■	■	■	■	■
Number of sprays	3	3	3	2	2
PowderRain	–	–	–	–	–
IntensePowderRain	–	–	–	–	–
Rain	■	■	■	■	■
RainAir	–	–	–	–	–
Single lever mixer	–	–	–	–	■
Thermostat	■	■	■	■	–
from page	106	107	108	108	109

Sustainability

EcoSmart+

With a consumption of up to 60% less water than our conventional models, this shower is particularly efficient and economical, reducing water and energy costs every day and conserving valuable resources.

EcoStop+

Consciously save valuable resources thanks to the EcoStop+ function. The water consumption of your thermostat is regulated to a maximum of 6 l/ min. If more water is needed, a higher water flow can be released by simply pressing the EcoStop+ button.

EcoSmart

This shower head uses up to 40% less water than our conventional showers. In this way, it reduces water and energy costs every day and conserves valuable resources. For long-lasting soothing showering pleasure.

Technologies

CoolContact

This thermostatic mixer is fitted with innovative cooling technology to prevent it from getting too hot, keeping it nice and cool to the touch. For care-free showering with no need to keep a safe distance or fear scalding.

Select

The Select push button simplifies daily bathroom routines, as one simple push is all it takes for water to flow or stop. When showering, the user-friendly button can change the spray type or switch from the overhead to the hand shower.

PushSlider

Smooth and ergonomic: This shower support can be used to conveniently adjust the height of the hand shower on the shower rail. Simply press the button and smoothly slide the support. It's so easy, it can be done with one hand.

Technologies

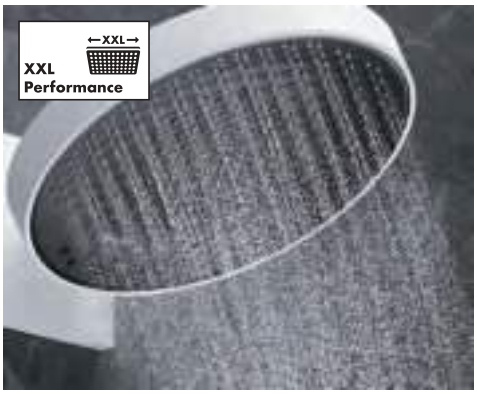

QuickClean

Who actually likes cleaning? Limescale deposits and dirt disappear in an instant with this technology. Simply rub the flexible silicone discs or nozzles with a finger. It's fast and keeps cleaning to a minimum.

XXL Performance

XXL showering indulgence that envelops the complete body in real-life dreams of water using wonderfully soothing spray types from hand showers and overhead showers with diameters of 100 to 600 mm.

AirPower

Mixes generous quantities of air into the water to create light, pearl-like droplets that caress the skin. The shower feels luxurious, even though little water is consumed. The spray causes less splash, reducing the time to clean the shower area.

Spray types

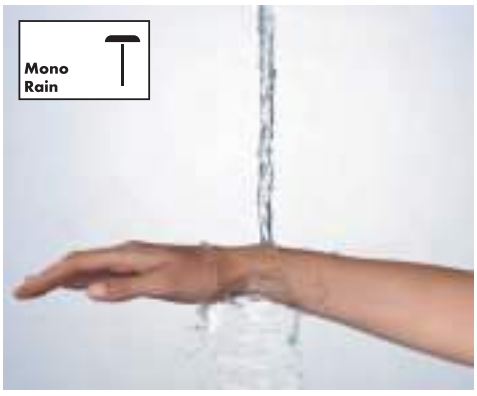

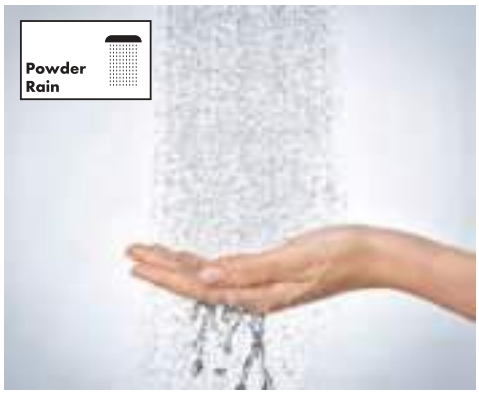

MonoRain

Focused and extremly gentle spray for feel-good wellness. The focused spray type is perfect for hydrotherapeutic showering and cold water treatments. For anyone who loves winding down in their shower or bath tub.

Normal

Versatile shower spray day in, day out. The shower rain pampers with full, light, rich droplets. The full water spray is great for washing hair and rinsing out shampoo.

PowderRain

Relaxing, micro-fine droplets that gently and quietly envelop the body. The water is transformed into a delicate cocoon that sensually embraces the body. For sensual showering and indulgent, deep relaxation.

Spray types

Rain

Invigorating and energising everyday showering indulgence with a satisfyingly full shower rain. With its small outlets on the shower head, this spray type works efficiently to thoroughly rinse out shampoo.

RainAir

Gentle droplets enriched with air from the luxurious shower rain feel silky soft on the skin for an indulgent shower. Additionally, this spray type is efficient and thorough enough to rinse out shampoo.

Shampoo

Intense water spray that rinses out shampoo in no time at all. And not only that: The highly efficient spray invigorates the body and mind in the mornings or after exercise. For wellness all year round.

SoftRain

Caressing water sprays that gently swirl around the body. An act of kindness for the skin, mind and soul. A perfectly smooth way to wake up in the morning, recover after exercise or wash off the stresses of a challenging day.

TurboRain

An invigorating multi-purpose spray that lives up to its name. With Turbo, the rain sprays ensure powerful, soothing showering. Perfect for those who want a quick and straightforward way to refresh themselves.

Whirl

Rotating water sprays to pleasantly shower away everyday tensions. Individual sprays of water flow around each other in a helical pattern, helping to relieve tension with their gentle massaging action.

Spray types

Intense PowderRain

Intense spray consisting of micro-fine droplets. The number of droplets is much higher for an extremely effective way to rinse out shampoo. The water feels velvety soft and ultra-lightweight on the skin, with very little splashback.

IntenseRain

Stimulating water sprays that wash away tiredness and immediately make the person feel nice and awake. The perfect and quick way to feel fit for the day ahead. The powerful spray also effortlessly rinses shampoo out of hair.

Massage

An invigorating spray that soothes and causes everyday stresses to flow down the drain. The water sprays are concentrated to ease tense spots. For an indulgent and relaxing spa-like shower, every single day.

Finish

Brushed Black Chrome
-340

Brushed Bronze
-140

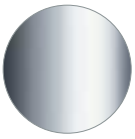

Chrome
-000

Matt Black
-670

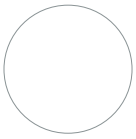

Matt White
-700

Polished Gold Optic
-990

White/ Chrome
-400

Rainfinity Shower sets 3jet with shower bar S Puro

Features of all variants

- shower head size: 130 mm
- spray type: PowderRain, Intense PowderRain, MonoRain
- spray disc surface: graphite
- convenient spray selection via Select button
- operating pressure: min. 1 bar/max. 6 bar
- height-adjustable slider with locking push-button slider
- wall mounting: screw fastening
- profile pipe: round
- shower bar diameter: 22 mm
- pivot connector prevents hose from tangling

90

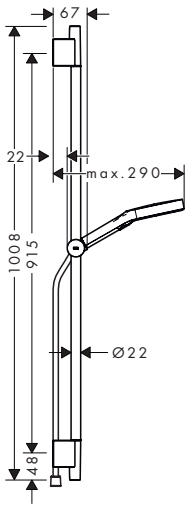

65

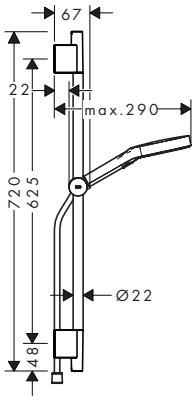

Sustainability

EcoSmart

Technologies

Select, Push slider, Quick Clean, XXL Performance

Spray types

Intense Powder Rain, Mono Rain, Powder Rain

Overview variants

Version	Length shower bar (mm)	Shower head size	Number of sprays	Spray types	Max. flow rate at 3 bar (l/min)	Min. flow pressure (bar)	Finish	Code no.
90	1008	130	3	PowderRain, Intense PowderRain, MonoRain	8.5	1	Chrome	28744000
							Brushed Bronze	28744140
							Brushed Black Chrome	28744340
							Matt Black	28744670
							Matt White	28744700
							Polished Gold Optic	28744990
90	1008	130	3	PowderRain, Intense PowderRain, MonoRain	14	1.1	Chrome	28743000
							Brushed Bronze	28743140
							Brushed Black Chrome	28743340
							Matt Black	28743670
							Matt White	28743700
							Polished Gold Optic	28743990
65	720	130	3	PowderRain, Intense PowderRain, MonoRain	8.5	1	Chrome	28746000
							Brushed Bronze	28746140
							Brushed Black Chrome	28746340
							Matt Black	28746670
							Matt White	28746700
							Polished Gold Optic	28746990

Measurements within scale drawings are in mm.
Technical specifications and units of measure are subject to change.

Rainfinity Shower sets 3jet with shower bar S Puro

Overview variants

Version	Length shower bar (mm)	Shower head size	Number of sprays	Spray types	Max. flow rate at 3 bar (l/min)	Min. flow pressure (bar)	Finish	Code no.
65	720	130	3	PowderRain, Intense PowderRain, MonoRain	14	1.1	Chrome	28745000
							Brushed Bronze	28745140
							Brushed Black Chrome	28745340
							Matt Black	28745670
							Matt White	28745700
							Polished Gold Optic	28745990

Rainfinity Shower sets 3jet

Features of all variants

- shower head size: 130 mm
- spray type: PowderRain, Intense PowderRain, MonoRain
- spray disc surface: graphite
- convenient spray selection via Select button
- shelf made of safety glass
- surface shelf: chrome
- 90° position adjustable hand shower holder, pivots left and right, up and down
- wall mounting: screw fastening
- wall supports made of plastic
- wall bar type: flat aluminium profile with safety glass finish
- surface shower bar: chrome
- profile pipe: square
- bar width: 41 mm
- pivot connector prevents hose from tangling

150

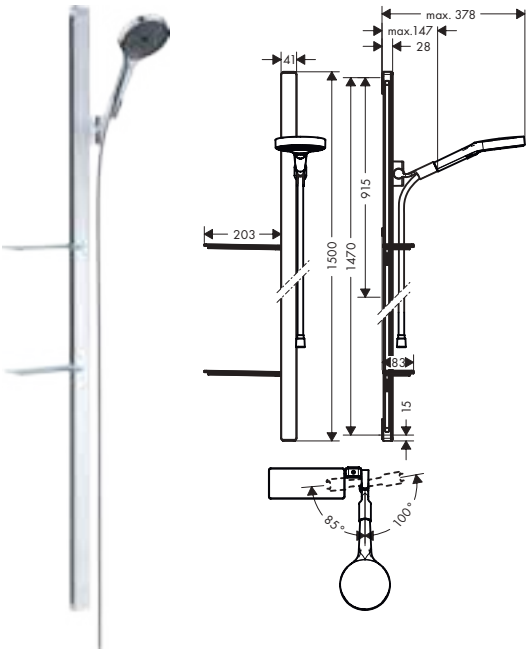

90

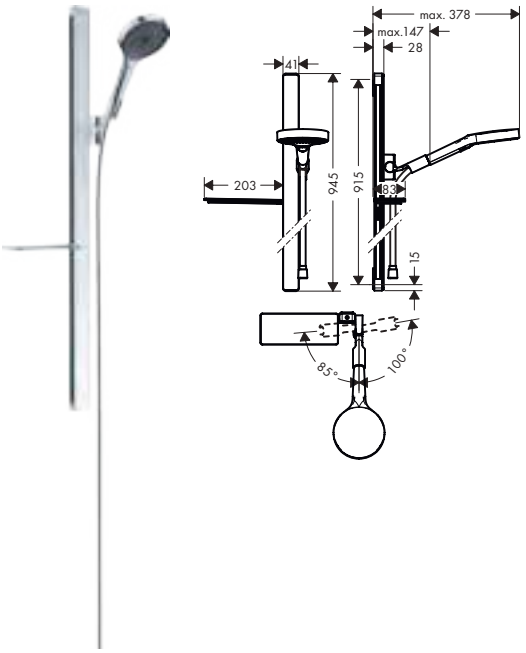

Sustainability

EcoSmart

Technologies

Select (SELECT)

Quick Clean

XXL Performance

Spray types

Intense Powder Rain

Mono Rain

Powder Rain

Overview variants

Version	Length shower bar (mm)	Shower head size	Spray types	Max. flow rate at 3 bar (l/min)	Min. flow pressure (bar)	Shelf	Finish	Code no.
150	1500	130	PowderRain, Intense PowderRain, MonoRain	8.5	1.5	2	Chrome	27674000
150	1500	130	PowderRain, Intense PowderRain, MonoRain	14	1	2	Chrome	27673000
90	945	130	PowderRain, Intense PowderRain, MonoRain	8.5	1.5	1	Chrome	27672000

For more information about this product, please see the next page.

Measurements within scale drawings are in mm.
Technical specifications and units of measure are subject to change.

Rainfinity Shower sets 3jet

Overview variants

Version	Length shower bar (mm)	Shower head size	Spray types	Max. flow rate at 3 bar (l/min)	Min. flow pressure (bar)	Shelf	Finish	Code no.
90	945	130	PowderRain, Intense PowderRain, MonoRain	14	1	1	Chrome	27671000

Raindance Select S Shower sets 3jet with shower bar S Puro

Features of all variants

- consists of: hand shower, shower bar, shower hose, slider, soap dish
- convenient spray selection via Select button
- 90° position adjustable hand shower holder, pivots left and right, up and down
- wall mounting: screw fastening
- wall supports made of plastic
- profile pipe: round
- shower bar diameter: 22 mm
- pivot connector prevents hose from tangling

90

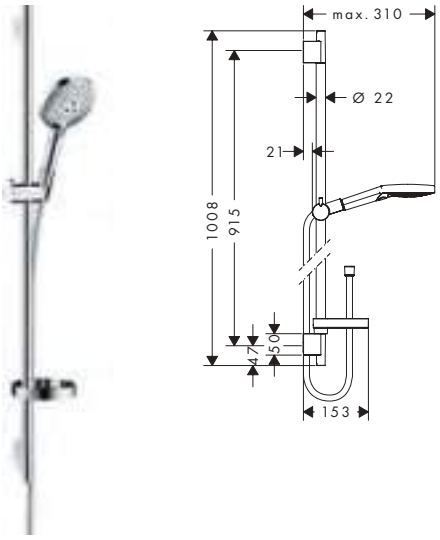

65

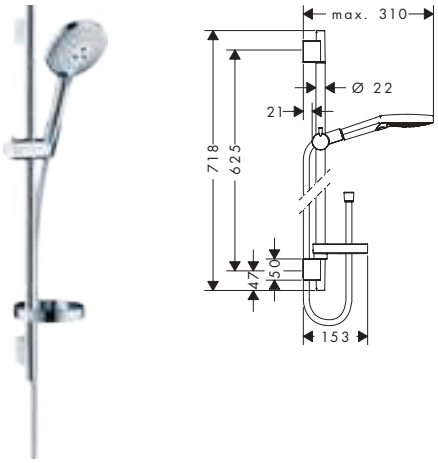

Sustainability

EcoSmart

Technologies

Select, AirPower, Quick Clean, XXL Performance

Spray types

Powder Rain, Rain, Rain Air, Whirl

Overview variants

Version	Length shower bar (mm)	Shower head size	Number of sprays	Spray types	Max. flow rate at 3 bar (l/min)	Min. flow pressure (bar)	Finish	Code no.
90	1008	120	3	RainAir, Whirl, Rain	8.5	1.5	Chrome	26633000
90	1008	120	3	Rain, RainAir, Whirl	15	1.4	Chrome	26631000
							White/Chrome	26631400
90	1008	120	3	PowderRain, Rain, Whirl	11	1	Chrome	27667000
65	718	120	3	Whirl, Rain, RainAir	8.5	1.5	Chrome	26632000
65	718	120	3	PowderRain, Rain, Whirl	11	1	Chrome	27654000
65	718	120	3	Rain, RainAir, Whirl	15	1	Chrome	26630000
							White/Chrome	26630400

Optional parts:		For	Finish	Code no.
	Wall bar spacer	26631XXX 27667XXX 27654XXX 26630XXX	Chrome	97450000

Measurements within scale drawings are in mm.
Technical specifications and units of measure are subject to change.

Raindance Select S Shower sets 3jet with shower bar Unica Comfort

Features of all variants

- consists of: hand shower, shower bar, storage basket, shower hose, slider
- shower head size: 125 mm
- spray type: RainAir, Rain, Whirl
- convenient spray selection via Select button
- shelf made of plastic, finish white
- shelf can be removed for cleaning
- 90° position adjustable hand shower holder, pivots left and right, up and down
- maximum flow rate at 3 bar: 15 l/min
- minimum flow pressure: 1,4 bar
- operating pressure: min. 0.14 MPa/max. 0.6 MPa
- shower holder can be removed
- metal hand shower holder
- wall mounting: screw fastening
- wall supports of metal
- profile pipe: round
- pipe length: 1100 mm
- shower bar diameter: 25 mm
- wallbar could be also used as grab bar - load capacity of 130 kg
- shower hose with conical nut on both ends
- pivot connector prevents hose from tangling

right

left

Technologies

Spray types

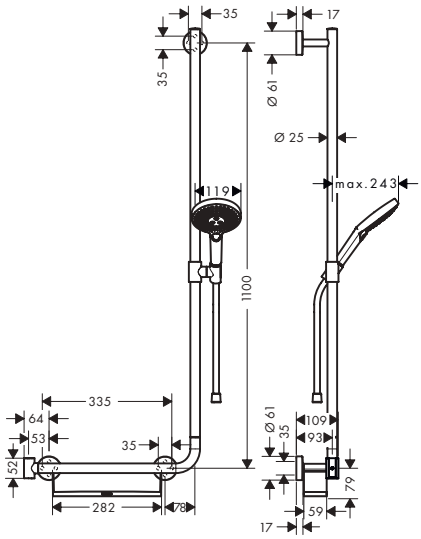

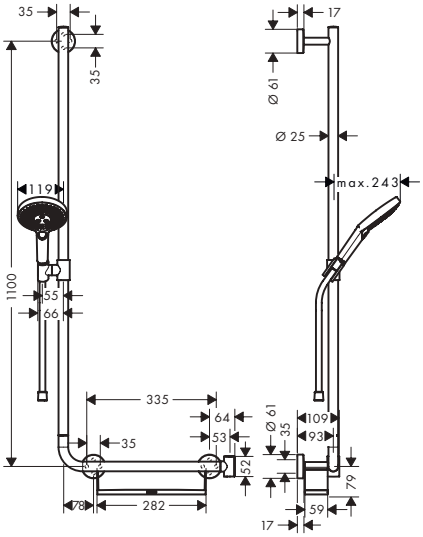

Overview variants

Shower bar	Length shower bar (mm)	Shower head size	Spray types	Max. flow rate at 3 bar (l/min)	Min. flow pressure (bar)	Finish	Code no.
right	1100	120	RainAir, Rain, Whirl	15	1.4	Chrome	26326000
left	1100	120	RainAir, Rain, Whirl	15	1.4	Chrome	26324000

Optional parts:		Finish	Code no.
	Unica Foot support Comfort	Chrome	26329000

Measurements within scale drawings are in mm.
Technical specifications and units of measure are subject to change.

Raindance Select S Shower sets 3jet with shower bar Unica Comfort

Features of all variants

- consists of: hand shower, shower bar, shower hose, slider
- shower head size: 125 mm
- spray type: Rain, RainAir, Whirl
- convenient spray selection via Select button
- 90° position adjustable hand shower holder, pivots left and right, up and down
- metal hand shower holder
- wall mounting: screw fastening
- wall supports of metal
- profile pipe: round
- shower bar diameter: 25 mm
- wallbar could be also used as grab bar - load capacity of 130 kg
- pivot connector prevents hose from tangling

90

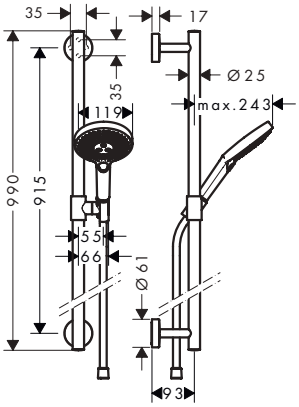

65

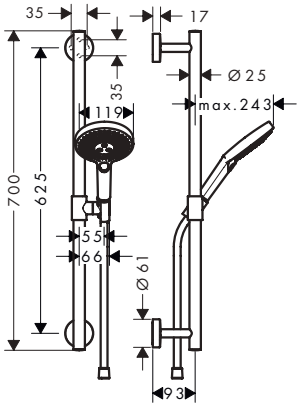

Sustainability

EcoSmart

Technologies

Select, AirPower, Quick Clean, XXL Performance

Spray types

Rain, Rain Air, Whirl

Overview variants

Version	Length shower bar (mm)	Shower head size	Number of sprays	Spray types	Max. flow rate at 3 bar (l/min)	Min. flow pressure (bar)	Finish	Code no.
90	990	120	3	Rain, RainAir, Whirl	8.5	1.5	Chrome	26323000
90	990	120	3	Rain, RainAir, Whirl	15	1.4	Chrome	26322000
							White/Chrome	26322400
65	700	120	3	Rain, RainAir, Whirl	15	1.4	Chrome	26320000

Optional parts:		For	Finish	Code no.
	Unica Foot support Comfort	26322XXX 26320XXX	Chrome	26329000
	Unica Grab handle Comfort with shelf and shower holder	26322XXX 26320XXX	White/Chrome	26328400

Measurements within scale drawings are in mm.
Technical specifications and units of measure are subject to change.

Unica Grab handle Comfort with shelf and shower holder

Features

- consists of: grab bar, shelf, shower holder
- shower holder can be installed on both sides
- shower holder can be removed
- shelf made of plastic, finish white
- shelf can be removed for cleaning
- fixed holding position
- handle bar diameter: 25 mm
- material: brass
- receptacle: conical

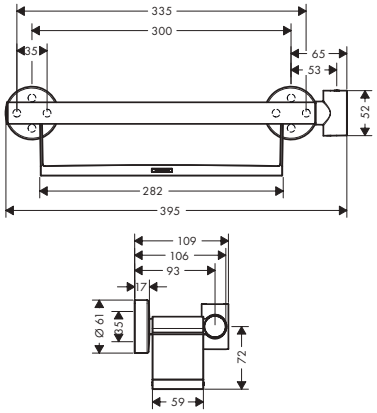

Finish	Code no.
White/Chrome	26328400

Optional parts:	Finish	Code no.
Unica Foot support Comfort	Chrome	26329000

Unica Foot support Comfort

Features

- antislip foot rest
- wall-mounted
- material: metal
- length: 284 mm
- with mounting material
- concealed fastening
- drilling distance: 192 mm
- TÜV certified

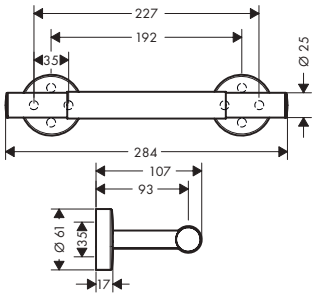

Finish	Code no.
Chrome	26329000

Raindance Select E Shower sets 3jet with shower bar S Puro

Features of all variants

- consists of: hand shower, shower bar, shower hose, slider, soap dish
- shower head size: 120 mm
- convenient spray selection via Select button
- 90° position adjustable hand shower holder, pivots left and right, up and down
- wall mounting: screw fastening
- wall supports made of plastic
- profile pipe: round
- shower bar diameter: 22 mm
- pivot connector prevents hose from tangling

90

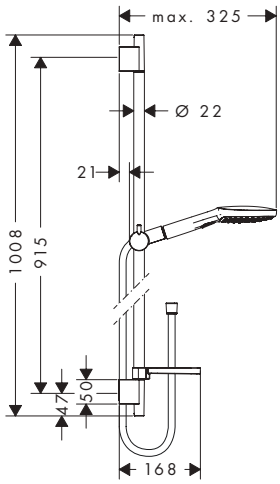

65

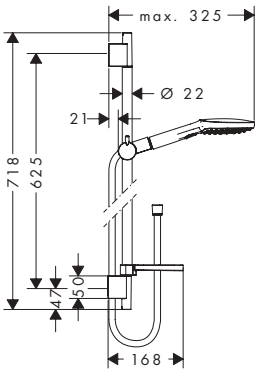

Sustainability

EcoSmart

Technologies

Select, AirPower, Quick Clean, XXL Performance

Spray types

Rain, Rain Air, Whirl

Overview variants

	Version	Length shower bar (mm)	Shower head size	Number of sprays	Spray types	Max. flow rate at 3 bar (l/min)	Min. flow pressure (bar)	Finish	Code no.
	90	1008	120	3	RainAir, Rain, Whirl	8.5	1.5	Chrome	26623000
								White/Chrome	26623400
	90	1008	120	3	RainAir, Rain, Whirl	14.4	1	Chrome	26621000
								White/Chrome	26621400
	65	718	120	3	Rain, RainAir, Whirl	8.5	1.5	Chrome	26622000
								White/Chrome	26622400
	65	718	120	3	Rain, RainAir, Whirl	14.4	1	Chrome	26620000
								White/Chrome	26620400

Optional parts:		For	Finish	Code no.
	Wall bar spacer	26621XXX 26622XXX 26620XXX	Chrome	97450000

Measurements within scale drawings are in mm.
Technical specifications and units of measure are subject to change.

Raindance Select S Shower sets 3jet with shower bar Unica E

Features of all variants

- spray type: Rain, RainAir, Whirl
- convenient spray selection via Select button
- shelf made of safety glass
- surface shelf: chrome
- 90° position adjustable hand shower holder, pivots left and right, up and down
- wall mounting: screw fastening
- wall supports made of plastic
- wall bar type: flat aluminium profile with safety glass finish
- surface shower bar: chrome
- profile pipe: square
- bar width: 41 mm
- pivot connector prevents hose from tangling

150

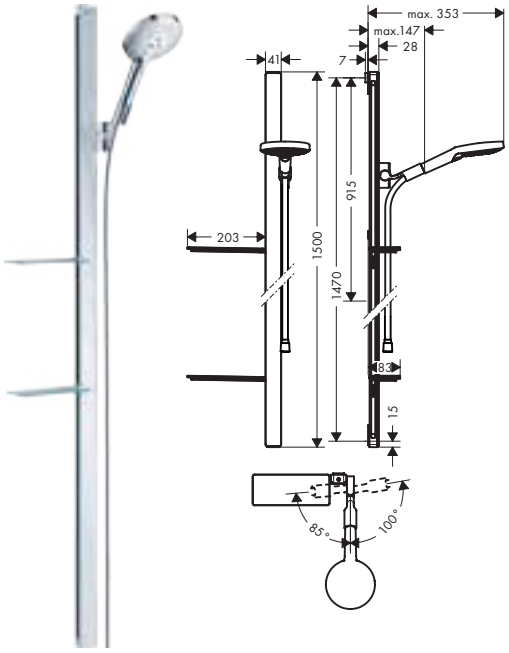

90

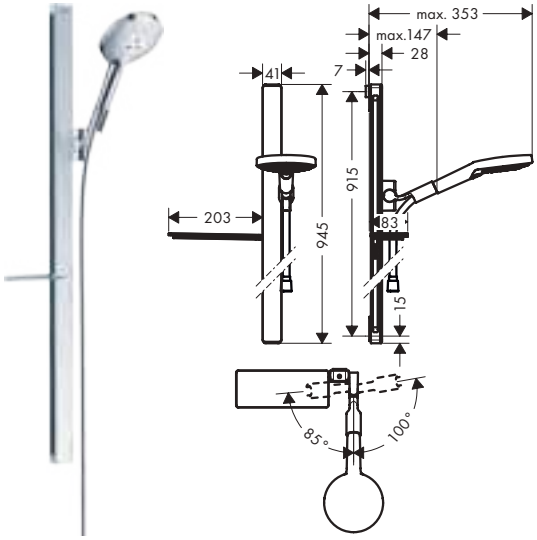

Sustainability

EcoSmart

Technologies

Select, AirPower, Quick Clean, XXL Performance

Spray types

Rain, Rain Air, Whirl

Overview variants

Version	Length shower bar (mm)	Shower head size	Max. flow rate at 3 bar (l/min)	Min. flow pressure (bar)	Shelf	Finish	Code no.
150	1500	120	15	1	2	Chrome	27646000
90	945	120	8.5	1.5	1	Chrome	27649000
90	945	120	15	1	1	Chrome	27648000
						White/Chrome	27648400

27648400 Surface shelf: white.

27648400 Surface shower bar: white.

Optional parts:		For	Finish	Code no.
	Casetta Soap dish/ shelf E	27649XXX	Chrome	26511000

Measurements within scale drawings are in mm.
Technical specifications and units of measure are subject to change.

Pulsify S Shower sets 1jet with shower bar S Puro

Features of all variants

- consists of: baton hand shower, shower bar, shower hose, slider
- shower head size: 98 x 24 mm
- spray type: PowderRain
- minimum flow pressure: 0,5 bar
- operating pressure: min. 0,5 bar/max. 6 bar
- hand shower holder made of plastic/metal
- hand shower holder for right- and left-hand installation
- hand shower holder with locking mechanism
- wall mounting: screw fastening
- wall supports made of plastic
- wall bar type: swivelling shower bar
- profile pipe: cubic
- shower hose with conical nut on both ends
- pivot connector prevents hose from tangling

90

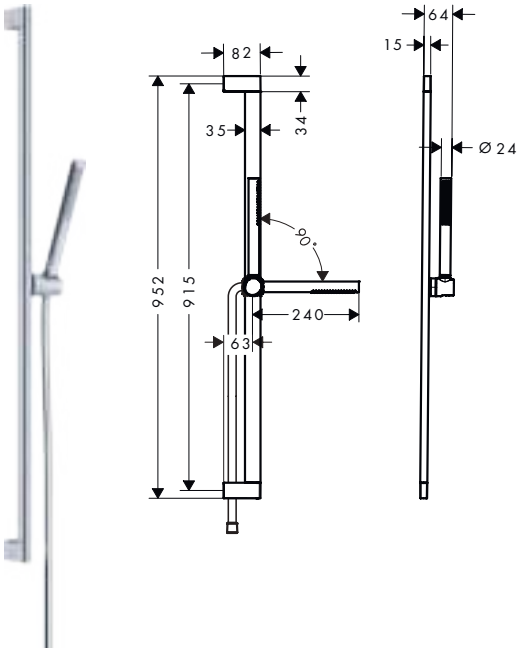

65

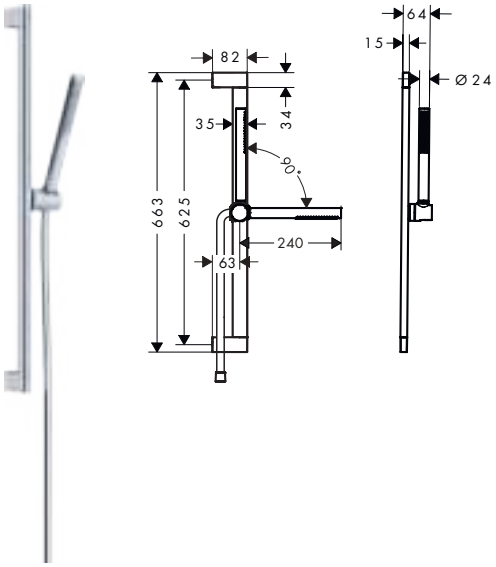

Sustainability

EcoSmart

Eco Smart+

Technologies

Quick Clean

Spray types

Powder Rain

Overview variants

	Version	Length shower bar (mm)	Shower head size	Spray types	Max. flow rate at 3 bar (l/min)	Finish	Code no.
	90	950	100	PowderRain	5.4	Chrome	24383000
						Matt Black	24383670
						Matt White	24383700
	90	950	100	PowderRain	8.5	Chrome	24382000
						Matt Black	24382670
						Matt White	24382700
	65	663	100	PowderRain	5.4	Chrome	24373000
						Matt Black	24373670
						Matt White	24373700
	65	663	100	PowderRain	8.5	Chrome	24372000
						Matt Black	24372670
						Matt White	24372700

Measurements within scale drawings are in mm.
Technical specifications and units of measure are subject to change.

Pulsify Select S Shower sets 3jet with shower bar Unica S

Features of all variants

- shower head size: 105 mm
- spray type: PowderRain, IntenseRain, Massage spray
- convenient spray selection via Select button
- height-adjustable slider with locking push-button slider
- hand shower holder made of plastic/metal
- slider rotatable on the pipe for left or right operation
- wall mounting: screw fastening
- wall supports made of plastic
- profile pipe: round
- shower bar diameter: 22 mm
- pivot connector prevents hose from tangling

90

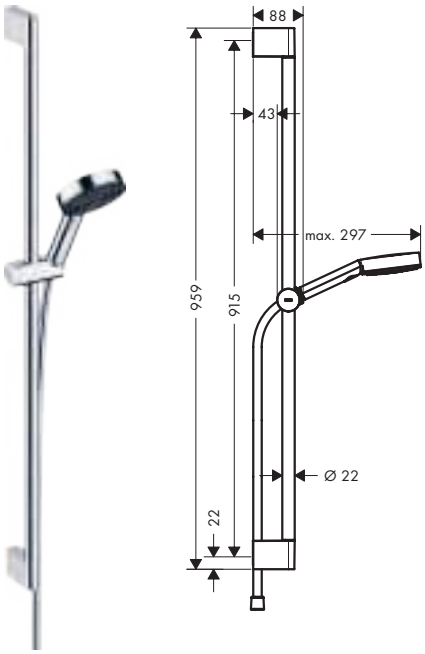

65

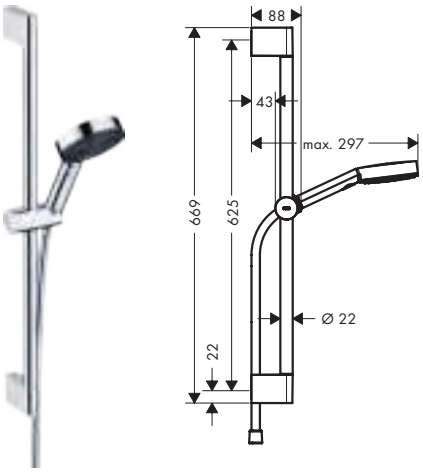

Sustainability

EcoSmart

Technologies

Select, Push slider, Quick Clean, XXL Performance

Spray types

Intense Rain, Massage, Powder Rain

Overview variants

Version	Length shower bar (mm)	Shower head size	Shower effect	Spray types	Max. flow rate at 3 bar (l/min)	Min. flow pressure (bar)	Finish	Code no.
90	959	105	Relaxation	PowderRain, IntenseRain, Massage spray	6.9	1.6	Chrome	24171000
							Matt Black	24171670
							Matt White	24171700
90	959	105	Relaxation	PowderRain, IntenseRain, Massage spray	11.4	1	Chrome	24170000
							Matt Black	24170670
							Matt White	24170700
65	669	105	Relaxation	PowderRain, IntenseRain, Massage spray	6.9	1.6	Chrome	24161000
							Matt Black	24161670
							Matt White	24161700
65	669	105	Relaxation	PowderRain, IntenseRain, Massage spray	11.4	1	Chrome	24160000
							Matt Black	24160670
							Matt White	24160700

Measurements within scale drawings are in mm.
Technical specifications and units of measure are subject to change.

Pulsify E Shower sets 1jet with shower bar Unica E

Features of all variants

- consists of: shower bar, shower hose, slider, baton hand shower
- shower head size: 100 x 25 mm
- spray type: PowderRain
- hand shower holder for right- and left-hand installation
- metal hand shower holder
- hand shower holder with locking mechanism
- wall mounting: screw fastening
- wall supports made of plastic
- wall bar type: swivelling shower bar
- profile pipe: cubic
- shower hose with conical nut on both ends
- pivot connector prevents hose from tangling

90

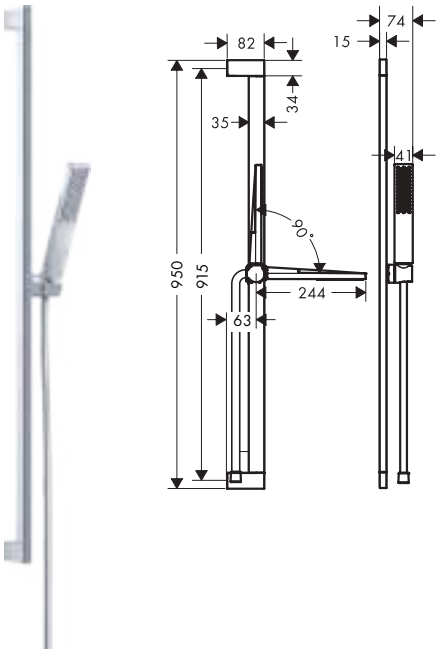

65

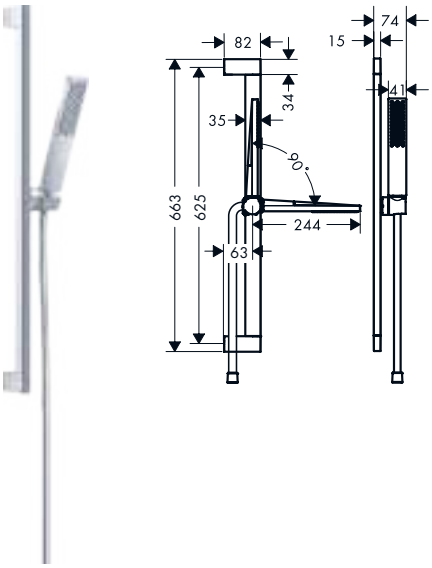

Sustainability

EcoSmart

Eco Smart+

Technologies

Quick Clean

Spray types

Powder Rain

Overview variants

	Version	Length shower bar (mm)	Shower head size	Number of sprays	Spray types	Max. flow rate at 3 bar (l/min)	Min. flow pressure (bar)	Finish	Code no.
	90	950	100	1	PowderRain	5	0.9	Chrome	24381000
								Matt Black	24381670
								Matt White	24381700
	90	950	100	1	PowderRain	8	0.8	Chrome	24380000
								Matt Black	24380670
								Matt White	24380700
	65	663	100	1	PowderRain	5	0.9	Chrome	24371000
								Matt Black	24371670
								Matt White	24371700
	65	663	100	1	PowderRain	8	0.8	Chrome	24370000
								Matt Black	24370670
								Matt White	24370700

Measurements within scale drawings are in mm.
Technical specifications and units of measure are subject to change.

Croma Select S Shower sets Multi, Vario, 1jet

Features of all variants

- shower head size: 110 mm
- wall mounting: screw fastening
- wall supports made of plastic
- profile pipe: round
- shower bar diameter: 22 mm
- pivot connector prevents hose from tangling

90

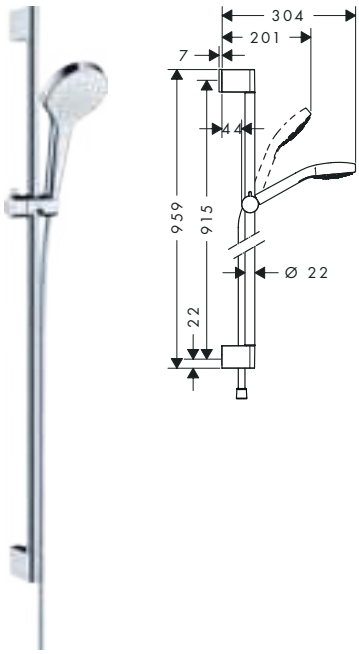

65

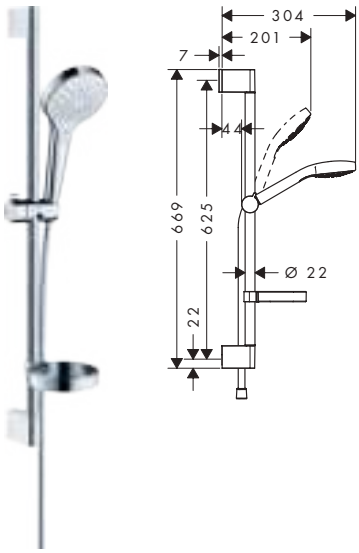

Sustainability

EcoSmart

Technologies

Select (SELECT) · Quick Clean · XXL Performance

Spray types

Intense Rain · Massage · Rain · SoftRain · Turbo Rain

Overview variants

Version	Length shower bar (mm)	Number of sprays	Spray types	Max. flow rate at 3 bar (l/min)	Min. flow pressure (bar)	soap dish	Select	Finish	Code no.
90 Multi	959	3	IntenseRain, SoftRain, Massage spray	9	1.2	–	■	White/Chrome	26571400
90 Vario	959	3	Rain, TurboRain, IntenseRain	9	1.2	–	■	White/Chrome	26573400
90 1jet	959	1	Rain	16	1	–	–	White/Chrome	26574400
65 Multi	669	3	IntenseRain, SoftRain, Massage spray	9	1	–	■	White/Chrome	26561400
65 Multi	669	3	IntenseRain, SoftRain, Massage spray	16	1	–	■	White/Chrome	26560400
65 Vario	669	3	Rain, TurboRain, IntenseRain	9	1.2	–	■	White/Chrome	26563400
65 Vario	669	3	Rain, TurboRain, IntenseRain	14.7	1	■	■	White/Chrome	26566400
65 Vario	669	3	Rain, TurboRain, IntenseRain	14.7	1	–	■	White/Chrome	26562400
65 1jet	669	1	Rain	16	1	–	–	White/Chrome	26564400

Optional parts:		Finish	Code no.
	Wall bar spacer	Chrome	97450000

Measurements within scale drawings are in mm.
Technical specifications and units of measure are subject to change.

Croma Select E Shower sets Multi, Vario, 1jet

Features of all variants

- consists of: hand shower, shower bar, shower hose, slider
- shower head size: 110 mm
- hand shower holder inclination angle can be adjusted by 45°
- wall mounting: screw fastening
- wall supports made of plastic
- profile pipe: round
- shower bar diameter: 22 mm
- pivot connector prevents hose from tangling

90

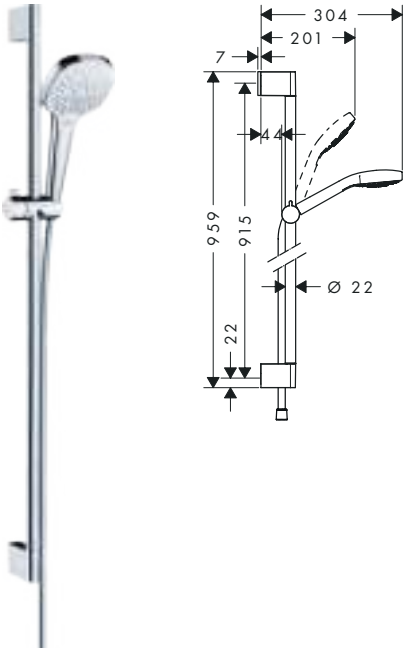

65

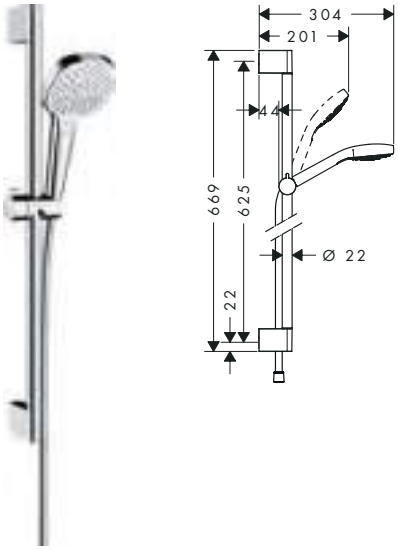

Sustainability

EcoSmart

Technologies

Select · Quick Clean · XXL Performance

Spray types

Intense Rain · Massage · Rain · SoftRain · Turbo Rain

Overview variants

Version	Length shower bar (mm)	Number of sprays	Spray types	Max. flow rate at 3 bar (l/min)	Min. flow pressure (bar)	Select	Finish	Code no.
90 Vario	959	3	TurboRain, IntenseRain, Rain	9	1.2	■	White/Chrome	26593400
90 Multi	959	3	SoftRain, IntenseRain, Massage spray	9	1	■	White/Chrome	26591400
90 Multi	959	3	SoftRain, IntenseRain, Massage spray	16	1	■	White/Chrome	26590400
90 1jet	959	1	Rain	16	1	–	White/Chrome	26594400
65 Vario	669	3	Rain, TurboRain, IntenseRain	9	1	■	White/Chrome	26583400
65 Vario	669	3	TurboRain, IntenseRain, Rain	14.7	1	■	White/Chrome	26582400
65 Multi	669	3	IntenseRain, Massage spray, SoftRain	9	1	■	White/Chrome	26581400
65 1jet	669	1	Rain	16	1	–	White/Chrome	26584400

Optional parts:		Finish	Code no.
	Wall bar spacer	Chrome	97450000

Measurements within scale drawings are in mm.
Technical specifications and units of measure are subject to change.

Croma 100 Shower sets Vario

Features of all variants

- consists of: hand shower, shower bar, shower hose, slider, soap dish
- shower head size: 100 mm
- spray type: Rain, Shampoo spray, normal spray, Massage spray
- spray type adjustment by turning spray disc
- 90° position adjustable hand shower holder, pivots left and right, up and down
- minimum flow pressure: 1 bar
- operating pressure: min. 1 bar/max. 6 bar
- wall mounting: screw fastening
- wall supports made of plastic
- profile pipe: round
- shower bar diameter: 22 mm
- pivot connector prevents hose from tangling

90

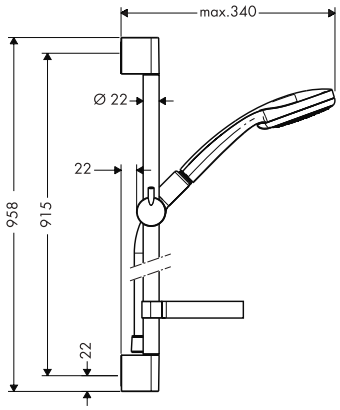

65

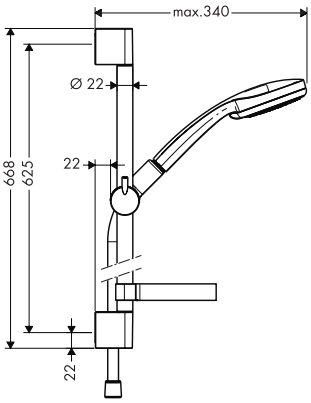

Sustainability

EcoSmart

Technologies

Quick Clean

XXL Performance

Spray types

Massage

Normal

Rain

Shampoo

Overview variants

Version	Length shower bar (mm)	Shower head size	Number of sprays	Spray types	Max. flow rate at 3 bar (l/min)	Min. flow pressure (bar)	Finish	Code no.
90 Vario	959	100	4	Rain, Shampoo spray, normal spray, Massage spray	18	1	Chrome	27771000
65 Vario	668	100	4	Rain, Shampoo spray, normal spray, Massage spray	9	1	Chrome	27776000
65 Vario	668	100	4	Rain, Shampoo spray, normal spray, Massage spray	18	1	Chrome	27772000

Optional parts:		Finish	Code no.
	Wall bar spacer	Chrome	97450000

Measurements within scale drawings are in mm.
Technical specifications and units of measure are subject to change.

Crometta Shower sets Vario, 1jet

Features of all variants

- shower head size: 100 mm
- hand shower holder inclination angle can be adjusted by 45°
- minimum flow pressure: 1 bar
- operating pressure: min. 1 bar/max. 6 bar
- wall mounting: screw fastening
- wall supports made of plastic
- profile pipe: round
- shower bar diameter: 22 mm
- pivot connector prevents hose from tangling

90

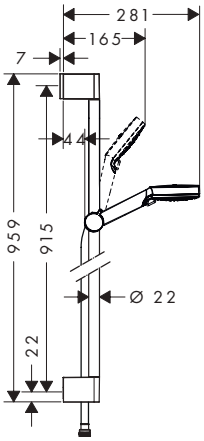

65

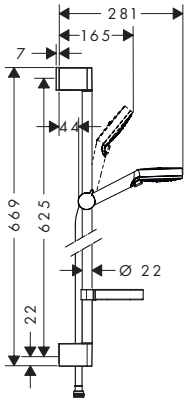

Sustainability

EcoSmart | Eco Smart+

Technologies

Quick Clean | XXL Performance

Spray types

Intense Rain | Rain

Overview variants

Version	Length shower bar (mm)	Number of sprays	Spray types	Max. flow rate at 3 bar (l/min)	Min. flow pressure (bar)	soap dish	Finish	Code no.
90 Vario	959	2	Rain, IntenseRain	9	1	–	White/Chrome	26538400
90 1jet	959	1	Rain	9	1	–	White/Chrome	26539400
65 Vario	669	2	Rain, IntenseRain	5.7	1	–	White/Chrome	26555400
65 Vario	669	2	Rain, IntenseRain	9	1	–	White/Chrome	26534400
65 Vario	669	2	Rain, IntenseRain	13.8	1	■	White/Chrome	26553400
65 1jet	669	1	Rain	5.7	1	–	White/Chrome	26554400
65 1jet	669	1	Rain	9	1	–	White/Chrome	26535400

Optional parts:		Finish	Code no.
	Wall bar spacer	Chrome	97450000

Measurements within scale drawings are in mm.
Technical specifications and units of measure are subject to change.

Crometta 85 Shower sets Multi, Vario, 1jet

Features of all variants

- shower head size: 85 mm
- 90° position adjustable hand shower holder, pivots left and right, up and down
- minimum flow pressure: 1 bar
- operating pressure: min. 1 bar/max. 6 bar
- wall mounting: screw fastening
- wall supports made of plastic
- profile pipe: round
- shower bar diameter: 22 mm

90

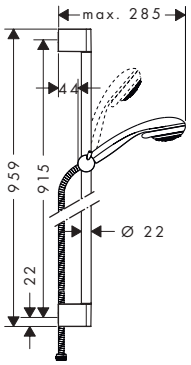

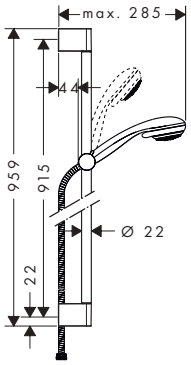

65

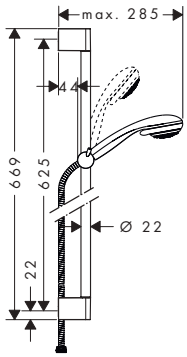

Sustainability

Eco Smart+

Technologies

AirPower, Quick Clean

Spray types

Massage, Mono Rain, Normal

Overview variants

Version	Length shower bar (mm)	Number of sprays	Spray types	Max. flow rate at 3 bar (l/min)	Min. flow pressure (bar)	soap dish	Finish	Code no.
90 Multi	959	3	Massage spray, MonoRain, normal spray	16	1	–	Chrome	27766000
90 Vario	959	2	normal spray, Vario spray	17	1	–	Chrome	27762000
90 1jet	959	1	normal spray	16	1	–	Chrome	27729000
65 Vario	669	2	normal spray, Vario spray	17	1	■	Chrome	27764000
65 Vario	669	2	normal spray, Vario spray	17	1	–	Chrome	27763000
65 1jet	669	1	normal spray	6	1	–	Chrome	27652000
65 1jet	669	1	normal spray	16	1	–	Chrome	27728000

Optional parts:		For	Finish	Code no.
	Casetta Soap dish C	27766XXX 27762XXX 27729XXX 27763XXX 27652XXX 27728XXX	Chrome	28678000
	Wall bar spacer		Chrome	97450000

Measurements within scale drawings are in mm.
Technical specifications and units of measure are subject to change.

Vernis Blend Shower set 100 Vario EcoSmart with shower bar Crometta 65 cm

Features

- consists of: hand shower, shower bar, shower hose, slider
- shower head size: 100 mm
- spray type: Rain, IntenseRain
- spray type adjustment by turning spray disc
- maximum flow rate at 3 bar: 6,7 l/min
- minimum flow pressure: 1 bar
- operating pressure: min. 1 bar/max. 6 bar
- wall mounting: screw fastening
- wall supports made of plastic
- profile pipe: round
- pipe length: 669 mm
- shower bar diameter: 22 mm
- drilling distance: 625 mm
- shower hose with conical nut on both ends
- EU taxonomy: max. 8 l/min - Do No Significant Harm (DNSH)

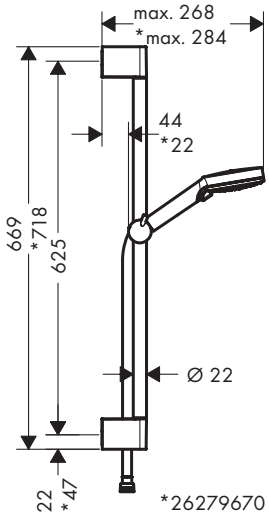

Sustainability

EcoSmart

Technologies

Quick Clean

XXL Performance

Spray types

Intense Rain

Rain

Finish	Code no.
Chrome	26279000

Measurements within scale drawings are in mm.
Technical specifications and units of measure are subject to change.

Vernis Blend Shower set 100 Vario EcoSmart with shower bar S Puro 65 cm

Features

- consists of: hand shower, shower bar, shower hose, slider
- shower head size: 100 mm
- spray type: Rain, IntenseRain
- spray type adjustment by turning spray disc
- hand shower holder inclination angle can be adjusted by 45°
- maximum flow rate at 3 bar: 6,7 l/min
- minimum flow pressure: 1 bar
- operating pressure: min. 1 bar/max. 6 bar
- wall mounting: screw fastening
- wall supports made of plastic
- profile pipe: round
- pipe length: 718 mm
- shower bar diameter: 22 mm
- drilling distance: 625 mm
- shower hose with conical nut on both ends
- pivot connector prevents hose from tangling
- EU taxonomy: max. 8 l/min - Do No Significant Harm (DNSH)

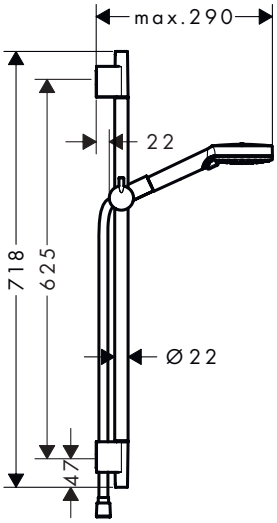

Sustainability

EcoSmart

Technologies

Quick Clean

XXL Performance

Spray types

Intense Rain

Rain

Finish	Code no.
Matt Black	26423670

Vernis Blend Shower set 100 Vario with shower bar 65 cm project pack (6 pieces)

Features

- consists of: hand shower, shower bar, shower hose, slider
- shower head size: 100 mm
- spray type: Rain, IntenseRain
- spray type adjustment by turning spray disc
- hand shower holder inclination angle can be adjusted by 45°
- maximum flow rate at 3 bar: 15,2 l/min
- minimum flow pressure: 1 bar
- operating pressure: min. 1 bar/max. 6 bar
- wall mounting: screw fastening
- wall supports made of plastic
- profile pipe: round
- pipe length: 669 mm
- shower bar diameter: 22 mm
- drilling distance: 625 mm
- shower hose with conical nut on both ends
- packaging unit: 6 pieces

6x

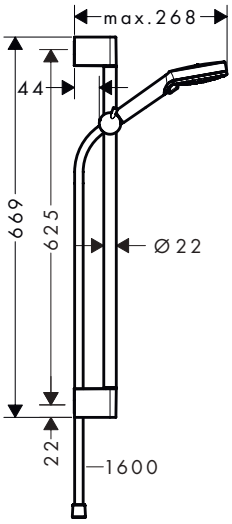

Technologies

Spray types

Finish	Code no.
Chrome	26371000

Measurements within scale drawings are in mm.
Technical specifications and units of measure are subject to change.

Raindance Select E Shower systems 3jet with thermostat

Features of all variants

- consists of: hand shower, shower thermostat, shower bar, slider, soap dish, shower hose
- shower head size: 120 mm
- spray type overhead shower: Rain, RainAir, Whirl
- maximum flow rate at 3 bar: 14,4 l/min
- minimum flow pressure: 1 bar
- max. operating pressure: 6 bar
- convenient spray selection via Select button
- profile pipe: round
- shower bar diameter: 22 mm
- pivot connector prevents hose from tangling
- 90° position adjustable hand shower holder, pivots left and right, up and down
- in case of installation on existing G ¾ connections, adaptor no.02026000 must be used
- CoolContact thermostat: Prevents the housing from heating up, making showering even safer

90

65

Technologies

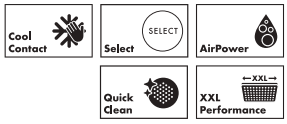

Spray types

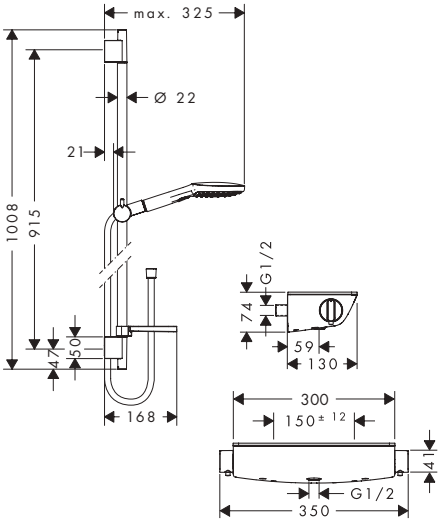

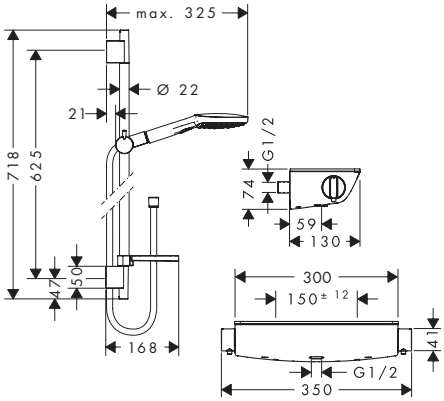

Overview variants

Version	Length shower bar (mm)	Shower head size	Number of sprays	Spray types	Max. flow rate at 3 bar (l/min)	Min. flow pressure (bar)	Finish	Code no.
90	1008	120	3	Rain, RainAir, Whirl	14.4	1	Chrome	27039000
							White/Chrome	27039400
65	718	120	3	Rain, RainAir, Whirl	14.4	1	Chrome	27038000
							White/Chrome	27038400

Optional parts:		Finish	Code no.
	S-connections adapter G ¾ for renovation	Chrome	02026000

Measurements within scale drawings are in mm.
Technical specifications and units of measure are subject to change.

Pulsify Select S Shower systems 3jet with Ecostat Fine

Features of all variants

- consists of: hand shower, shower thermostat, shower bar, slider, shower hose
- shower head size: 105 mm
- spray type overhead shower: PowderRain, IntenseRain, Massage spray
- flow rate PowderRain spray at 3 bar: 8,2 l/min
- maximum flow rate at 3 bar: 8,2 l/min
- minimum flow pressure: 1,2 bar
- max. operating pressure: 6 bar
- convenient spray selection via Select button
- temperature and water flow control, Select push-button on/off control for 1 outlet
- thermostat: Ecostat Fine
- EcoStop+ button limits the water consumption to 6 l/min
- safety stop at 40 °C
- adjustable hot water limitation
- intrinsically safe against backflow
- slider rotatable on the pipe for left or right operation
- profile pipe: round
- shower bar diameter: 22 mm
- wall supports made of plastic
- nuts shower hose: shower hose with conical nut on both ends
- pivot connector prevents hose from tangling

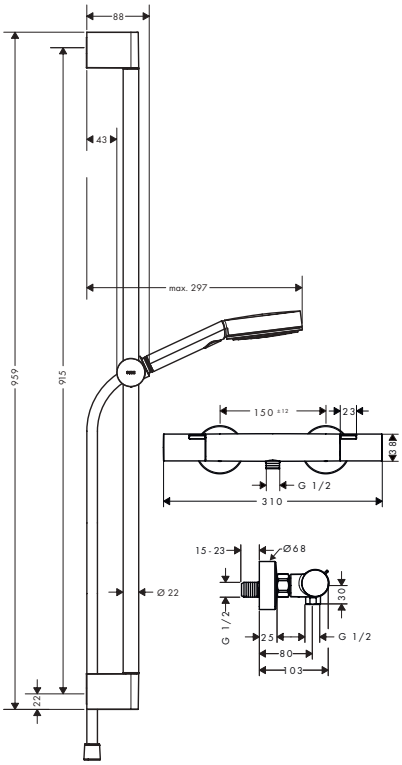

Sustainability

Technologies

Spray types

Overview variants

	Version	Length shower bar (mm)	Shower effect	Number of sprays	Spray types	Max. flow rate at 3 bar (l/min)	Min. flow pressure (bar)	Finish	Code no.
	90	959	Relaxation	3	PowderRain, IntenseRain, Massage spray	8.2	1.2	Chrome	24261000
								Matt Black	24261670
	65	669	Relaxation	3	PowderRain, IntenseRain, Massage spray	8.2	1.2	Chrome	24262000
								Matt Black	24262670

Measurements within scale drawings are in mm.
Technical specifications and units of measure are subject to change.

Pulsify Select S Shower systems 3jet with Ecostat Element

Features of all variants

- consists of: hand shower, shower thermostat, shower bar, slider, shower hose
- shower head size: 105 mm
- spray type overhead shower: PowderRain, IntenseRain, Massage spray
- flow rate PowderRain spray at 3 bar: 8,2 l/min
- maximum flow rate at 3 bar: 8,2 l/min
- minimum flow pressure: 1,2 bar
- max. operating pressure: 6 bar
- convenient spray selection via Select button
- temperature and water flow control, Select push-button on/off control for 1 outlet
- thermostat: Ecostat Element
- EcoStop+ button limits the water consumption to 6 l/min
- safety stop at 40 °C
- adjustable hot water limitation
- intrinsically safe against backflow
- slider rotatable on the pipe for left or right operation
- profile pipe: round
- shower bar diameter: 22 mm
- wall supports made of plastic
- nuts shower hose: shower hose with conical nut on both ends
- pivot connector prevents hose from tangling

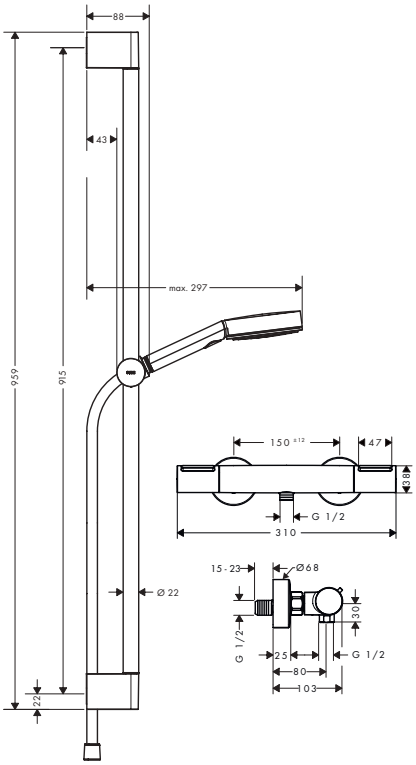

Sustainability

Technologies

Spray types

Overview variants

Version	Length shower bar (mm)	Shower effect	Number of sprays	Spray types	Max. flow rate at 3 bar (l/min)	Min. flow pressure (bar)	Finish	Code no.
90	959	Relaxation	3	PowderRain, IntenseRain, Massage spray	8.2	1.2	Chrome	24271000
							Matt Black	24271670
65	669	Relaxation	3	PowderRain, IntenseRain, Massage spray	8.2	1.2	Chrome	24272000
							Matt Black	24272670

Measurements within scale drawings are in mm.
Technical specifications and units of measure are subject to change.

Pulsify Select S Shower systems 3jet with thermostat

Features of all variants

- consists of: hand shower, shower thermostat, shower bar, slider, shower hose
- shower head size: 105 mm
- spray type overhead shower: PowderRain, IntenseRain, Massage spray
- maximum flow rate at 3 bar: 11,4 l/min
- max. operating pressure: 6 bar
- convenient spray selection via Select button
- temperature and water flow control, Select push-button on/off control for 1 outlet, hand shower holder integrated in the shelf
- thermostat: ShowerTablet Select 400
- safety stop at 40 °C
- adjustable hot water limitation
- intrinsically safe against backflow
- slider rotatable on the pipe for left or right operation
- profile pipe: round
- shower bar diameter: 22 mm
- wall supports made of plastic
- nuts shower hose: shower hose with conical nut on both ends
- pivot connector prevents hose from tangling
- CoolContact thermostat: Prevents the housing from heating up, making showering even safer

90

65

Technologies

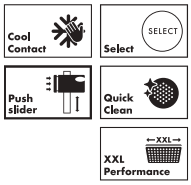

Spray types

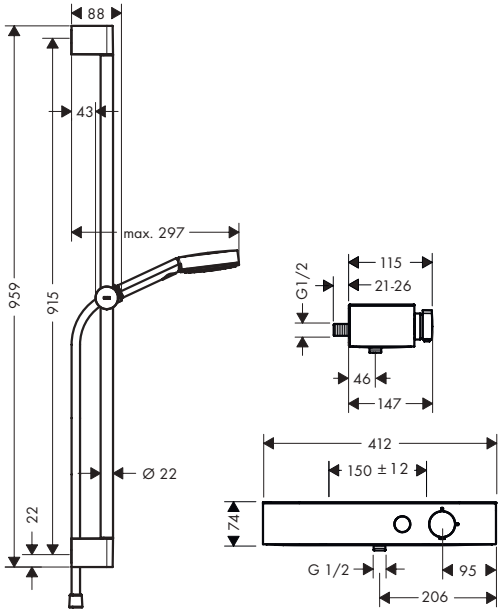

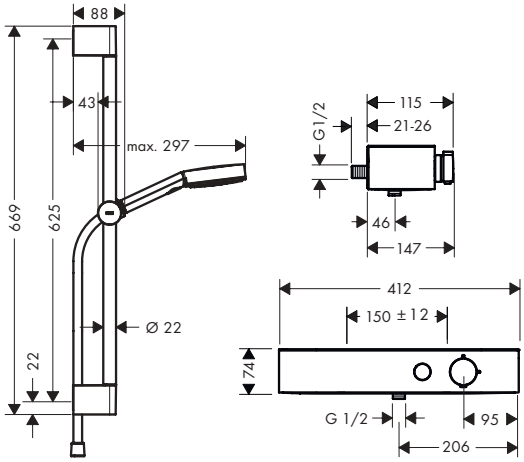

Overview variants

Version	Length shower bar (mm)	Shower effect	Number of sprays	Spray types	Max. flow rate at 3 bar (l/min)	Finish	Code no.
90	959	Relaxation	3	PowderRain, IntenseRain, Massage spray	11.4	Chrome	24270000
65	669	Relaxation	3	PowderRain, IntenseRain, Massage spray	11.4	Chrome	24260000

Optional parts:		Finish	Code no.
	S-connections adapter G ¾ for renovation	Chrome	02026000

Measurements within scale drawings are in mm.
Technical specifications and units of measure are subject to change.

Croma Select S Shower systems Vario with thermostat

Features of all variants

- consists of: hand shower, shower thermostat, shower bar, slider, shower hose
- projection: 110 mm
- spray type overhead shower: Rain, IntenseRain, TurboRain
- maximum flow rate at 3 bar: 14,7 l/min
- minimum flow pressure: 1 bar
- max. operating pressure: 6 bar
- convenient spray selection via Select button
- thermostat: Ecostat Comfort
- profile pipe: round
- shower bar diameter: 22 mm
- wall supports made of plastic
- pivot connector prevents hose from tangling
- hand shower holder inclination angle can be adjusted by 45°

90

65

Technologies

Spray types

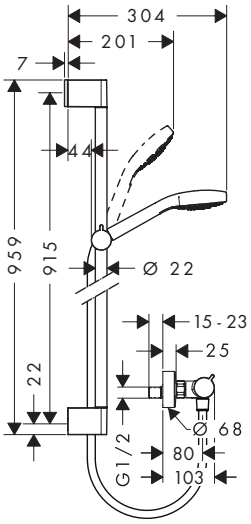

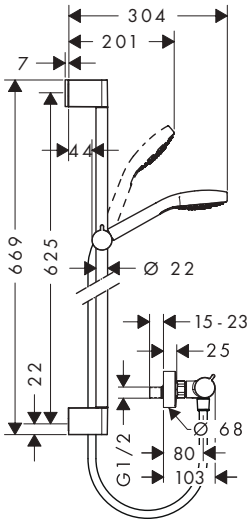

Overview variants

Version	Length shower bar (mm)	Shower head size	Number of sprays	Spray types	Max. flow rate at 3 bar (l/min)	Min. flow pressure (bar)	Finish	Code no.
90 Vario	959	110	3	Rain, IntenseRain, TurboRain	14.7	1	White/Chrome	27014400
65 Vario	669	110	3	Rain, IntenseRain, TurboRain	14.7	1	White/Chrome	27013400

Measurements within scale drawings are in mm.
Technical specifications and units of measure are subject to change.

Croma Select S Shower system for exposed installation Vario with Ecostat 1001 CL thermostat and shower bar 72 cm

Features

- consists of: hand shower, shower thermostat, shower bar, slider, shower hose
- projection: 110 mm
- spray type overhead shower: Rain, IntenseRain, TurboRain
- maximum flow rate at 3 bar: 14,7 l/min
- minimum flow pressure: 1,2 bar
- max. operating pressure: 6 bar
- convenient spray selection via Select button
- profile pipe: round
- shower bar diameter: 22 mm
- variable drilling hole distance: 400 - 660 mm
- wall supports made of plastic
- pivot connector prevents hose from tangling
- 90° position adjustable hand shower holder, pivots left and right, up and down

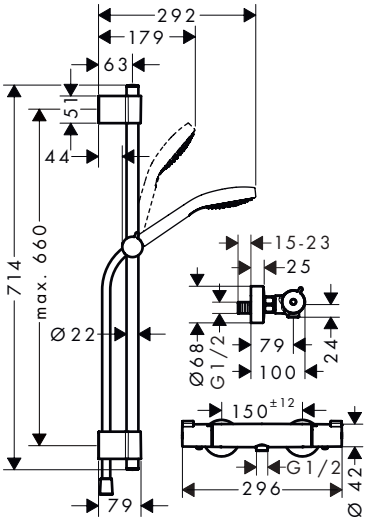

Technologies

Spray types

Finish	Code no.
White/Chrome	27833400

Measurements within scale drawings are in mm.
Technical specifications and units of measure are subject to change.

Croma Select E Shower systems Vario with thermostat

Features of all variants

- consists of: hand shower, shower thermostat, shower bar, slider, shower hose
- projection: 110 mm
- spray type overhead shower: Rain, IntenseRain, TurboRain
- maximum flow rate at 3 bar: 14,7 l/min
- minimum flow pressure: 1 bar
- max. operating pressure: 6 bar
- convenient spray selection via Select button
- thermostat: Ecostat Comfort
- EcoStop button limits the water consumption to 10 l/min
- safety stop at 40 °C
- intrinsically safe against backflow
- profile pipe: round
- shower bar diameter: 22 mm
- wall supports made of plastic
- pivot connector prevents hose from tangling
- hand shower holder inclination angle can be adjusted by 45 °

90

65

Technologies

Spray types

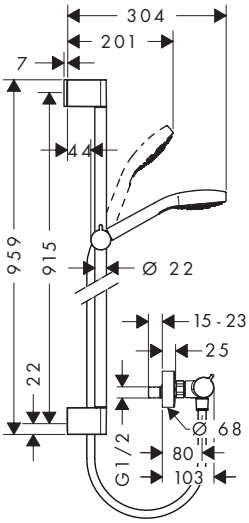

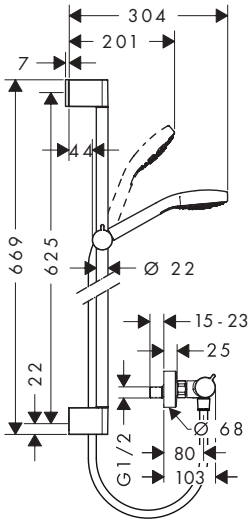

Overview variants

Version	Length shower bar (mm)	Shower head size	Number of sprays	Spray types	Max. flow rate at 3 bar (l/min)	Min. flow pressure (bar)	Finish	Code no.
90 Vario	959	110	3	Rain, IntenseRain, TurboRain	14.7	1	White/Chrome	27082400
65 Vario	669	110	3	Rain, IntenseRain, TurboRain	14.7	1	White/Chrome	27081400

Measurements within scale drawings are in mm.
Technical specifications and units of measure are subject to change.

Croma 100 Shower system for exposed installation Multi with Ecostat Comfort thermostat and shower bar 90 cm

Features

- consists of: hand shower, shower thermostat, shower bar, slider, soap dish, shower hose
- shower head size: 100 mm
- spray type overhead shower: Rain, MonoRain, Massage spray
- maximum flow rate at 3 bar: 19 l/min
- minimum flow pressure: 1,2 bar
- max. operating pressure: 6 bar
- spray type adjustment by turning spray disc
- thermostat: Ecostat Comfort
- EcoStop button limits the water consumption to 10 l/min
- safety stop at 40 °C
- intrinsically safe against backflow
- profile pipe: round
- shower bar diameter: 22 mm
- pipe length: 990 mm
- wall supports made of plastic
- pivot connector prevents hose from tangling
- 90° position adjustable hand shower holder, pivots left and right, up and down

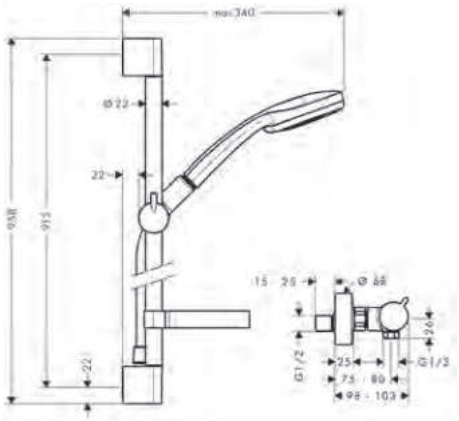

Technologies

Spray types

Finish	Code no.
Chrome	27085000

Optional parts:	Finish	Code no.
Wall bar spacer	Chrome	97450000

Crometta Shower systems Vario with thermostat

Features of all variants

- consists of: hand shower, shower thermostat, shower bar, slider, shower hose
- shower head size: 100 mm
- spray type overhead shower: Rain, IntenseRain
- maximum flow rate at 3 bar: 13,8 l/min
- minimum flow pressure: 1 bar
- spray type adjustment by turning spray disc
- thermostat: Ecostat 1001 CL
- profile pipe: round
- shower bar diameter: 22 mm
- wall supports made of plastic
- pivot connector prevents hose from tangling
- 90° position adjustable hand shower holder, pivots left and right, up and down

90

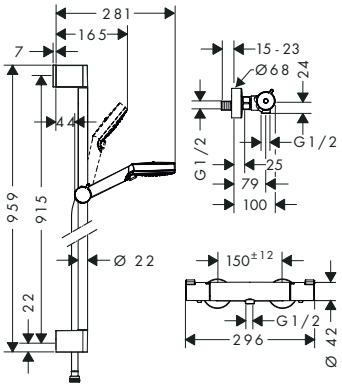

65

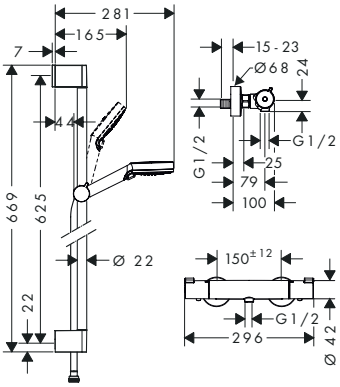

Technologies

Spray types

Measurements within scale drawings are in mm.
Technical specifications and units of measure are subject to change.

Crometta Shower systems Vario with thermostat

Overview variants

Version	Length shower bar (mm)	Shower head size	Number of sprays	Spray types	Max. flow rate at 3 bar (l/min)	Min. flow pressure (bar)	Finish	Code no.
90 Vario	959	100	2	Rain, IntenseRain	13.8	1	White/Chrome	27813400
65 Vario	669	100	2	Rain, IntenseRain	13.8	1	White/Chrome	27812400

Vernis Blend Shower systems Vario with single lever shower mixer

Features of all variants

- shower head size: 100 mm
- spray type overhead shower: Rain, IntenseRain
- minimum flow pressure: 1 bar
- spray type adjustment by turning spray disc
- profile pipe: round
- shower bar diameter: 22 mm
- drilling distance: 625 mm
- wall supports made of plastic
- nuts shower hose: shower hose with conical nut on both ends
- with non-return valve

Crometta 65

S Puro 65

Sustainability

EcoSmart

Technologies

Quick Clean

XXL Performance

Spray types

Intense Rain

Rain

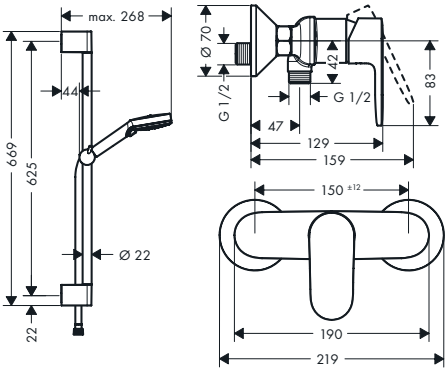

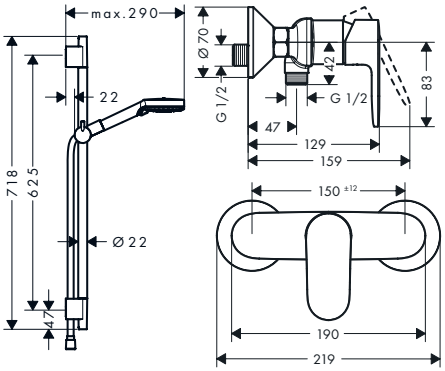

Overview variants

Version	Shower head size	Spray types	Max. flow rate at 3 bar (l/min)	Finish	Code no.
65	100	Rain, IntenseRain	6.7	Chrome	26957000
65	100	Rain, IntenseRain	9.7	Matt Black	26958670

Measurements within scale drawings are in mm.
Technical specifications and units of measure are subject to change.

Vernis Blend Shower system for exposed installation 100 Vario EcoSmart with thermostat Ecostat S and shower bar Crometta 65 cm

Features

- consists of: hand shower, shower bar, slider, shower thermostat, shower hose
- shower head size: 100 mm
- spray type overhead shower: Rain, IntenseRain
- maximum flow rate at 3 bar: 9,7 l/min
- minimum flow pressure: 1 bar
- max. operating pressure: 6 bar
- spray type adjustment by turning spray disc
- thermostat: Ecostat S
- EcoStop button limits the water consumption to 10 l/min
- safety stop at 40 °C
- intrinsically safe against backflow
- profile pipe: round
- shower bar diameter: 22 mm
- drilling distance: 625 mm
- wall supports made of plastic
- nuts shower hose: shower hose with conical nut on both ends
- with non-return valve

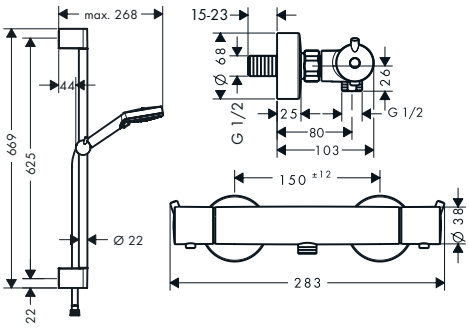

Sustainability

EcoSmart

Technologies

Quick Clean

XXL Performance

Spray types

Intense Rain

Rain

Finish	Code no.
Chrome	26960000

Measurements within scale drawings are in mm.
Technical specifications and units of measure are subject to change.

Shower bars

Technologies

PushSlider

Smooth and ergonomic: This shower support can be used to conveniently adjust the height of the hand shower on the shower rail. Simply press the button and smoothly slide the support. It's so easy, it can be done with one hand.

Finish

Black/
Chrome

-600

Brushed
Black
Chrome

-340

Brushed
Bronze

-140

Brushed
Nickel

-820

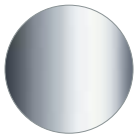

Chrome

-000

Matt Black

-670

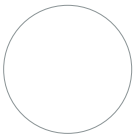

Matt White

-700

Polished
Gold Optic

-990

White/
Chrome

-400

Unica Shower bars E

Features of all variants

- flat aluminium profile with safety glass finish
- pivot connector prevents hose from tangling
- hose nut: for shower hoses with a conical nut
- 90° position adjustable hand shower holder, pivots left and right, up and down
- shelf made of safety glass
- surface shower bar: chrome
- bar width: 41 mm
- profile pipe: flat
- shower hose length: 1600 mm
- metal hand shower holder
- self-locking hand shower holder
- slider steplessly adjustable
- wall supports made of plastic

150

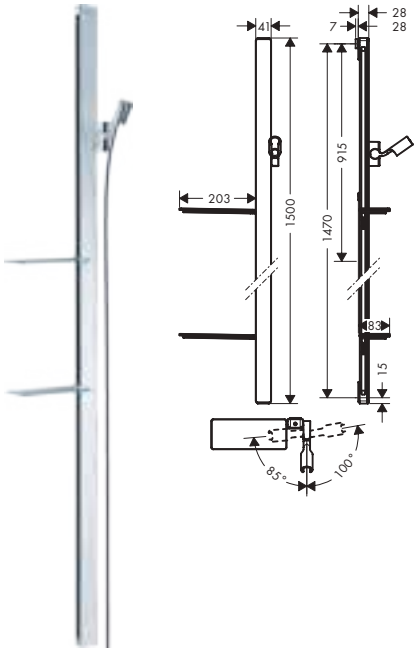

90

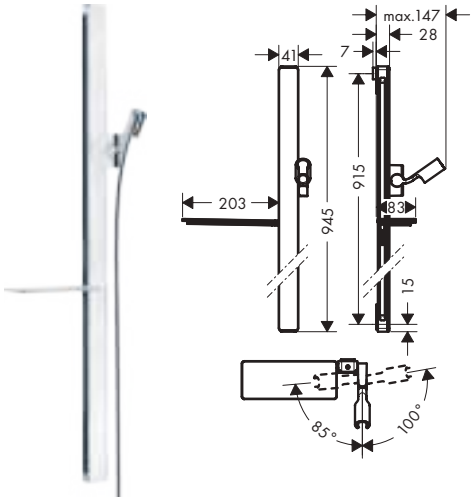

Overview variants

Version	Length shower bar (mm)	Drilling distance (mm)	Shower hose length (mm)	Shelf	Finish	Code no.
150	1500	1470	1600	2	Chrome	27645000
90	945	915	1600	1	Chrome	27640000
					White/Chrome	27640400

27640400 Surface shower bar: white.

Optional parts:		Finish	Code no.
	Casetta Soap dish/ shelf E	Chrome	26511000
		White/Chrome	26511400

Measurements within scale drawings are in mm.
Technical specifications and units of measure are subject to change.

Unica Shower bar Raindance 90 cm with Isiflex shower hose 160 cm

Features

- consists of: shower bar, shower hose, slider
- flat and slim aluminium profile
- pivot connector prevents hose from tangling
- pipe length: 995 mm
- bar width: 45 mm
- profile pipe: square
- drilling distance: 915 mm
- shower hose length: 1600 mm
- metal hand shower holder
- self-locking hand shower holder
- slider steplessly adjustable

Finish	Code no.
Chrome	27636000

Optional parts:		Finish	Code no.
	Casetta Soap dishes Raindance	Chrome	28698000
	Raindance Corner fitting set		28694000
	Raindance Wall bar spacer	Chrome	98993000

Measurements within scale drawings are in mm.
Technical specifications and units of measure are subject to change.

Unica Shower bars E Puro with easy slider

Features of all variants

- consists of: shower bar, slider, shower hose
- swivelling shower bar
- pivot connector prevents hose from tangling
- profile pipe: cubic
- shower hose length: 1600 mm
- hand shower holder for right- and left-hand installation, metal hand shower holder
- hand shower holder with locking mechanism
- slider steplessly adjustable
- wall supports made of plastic

90

65

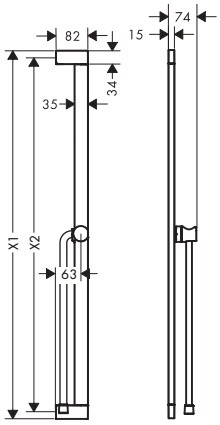

Overview variants

Version	X1 Length shower bar (mm)	X2 Drilling distance (mm)	Shower hose length (mm)	Finish	Code no.
90	950	915	1600	Chrome	24403000
				Brushed Bronze	24403140
				Matt Black	24403670
				Matt White	24403700
65	663	625	1600	Chrome	24404000
				Brushed Bronze	24404140
				Matt Black	24404670
				Matt White	24404700

Measurements within scale drawings are in mm.
Technical specifications and units of measure are subject to change.

Unica Shower bars S Puro with easy slider

Features of all variants

- consists of: shower bar, slider, shower hose
- swivelling shower bar
- pivot connector prevents hose from tangling
- hose nut: for shower hoses with a conical nut
- profile pipe: round
- shower hose length: 1600 mm
- hand shower holder made of plastic/metal, hand shower holder for right- and left-hand installation
- hand shower holder with locking mechanism
- slider steplessly adjustable
- wall supports made of plastic

90

65

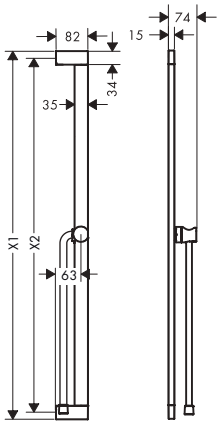

Overview variants

Version	X1 Length shower bar (mm)	X2 Drilling distance (mm)	Shower hose length (mm)	Finish	Code no.
90	950	915	1600	Chrome	24405000
				Brushed Bronze	24405140
				Matt Black	24405670
				Matt White	24405700
65	663	625	1600	Chrome	24402000
				Brushed Bronze	24402140
				Matt Black	24402670
				Matt White	24402700

Measurements within scale drawings are in mm.
Technical specifications and units of measure are subject to change.

Unica Shower bars S Puro

Features of all variants

- consists of: shower bar, shower hose, slider
- pivot connector prevents hose from tangling
- shower bar diameter: 22 mm
- profile pipe: round
- shower hose length: 1600 mm
- metal hand shower holder
- hand shower holder with locking mechanism
- slider steplessly adjustable
- inclination angle adjustable via raster
- wall supports made of plastic

90

65

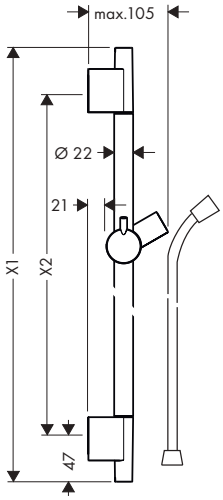

Overview variants

Version	X1 Length shower bar (mm)	X2 Drilling distance (mm)	Shower hose length (mm)	Finish	Code no.
90	1008	915	1600	Chrome	28631000
				Brushed Bronze	28631140
				Brushed Black Chrome	28631340
				Matt Black	28631670
				Matt White	28631700
				Brushed Nickel	28631820
				Polished Gold Optic	28631990
65	718	625	1600	Chrome	28632000
				Brushed Bronze	28632140
				Brushed Black Chrome	28632340
				Matt Black	28632670
				Matt White	28632700
				Polished Gold Optic	28632990

Optional parts:		Finish	Code no.
	Wall bar spacer	Chrome	97450000
	Casetta Soap dish S Puro	Chrome	28679000

Measurements within scale drawings are in mm.
Technical specifications and units of measure are subject to change.

Unica Shower bars Pulsify S with push slider

Features of all variants

- consists of: shower bar, slider, shower hose
- pivot connector prevents hose from tangling
- hand shower holder inclination angle can be adjusted by 45°
- shower bar diameter: 22 mm
- profile pipe: round
- shower hose length: 1600 mm
- height-adjustable slider with locking push-button slider, slider rotatable on the pipe for left or right operation
- hand shower holder with locking mechanism
- slider steplessly adjustable
- wall supports made of plastic

90

65

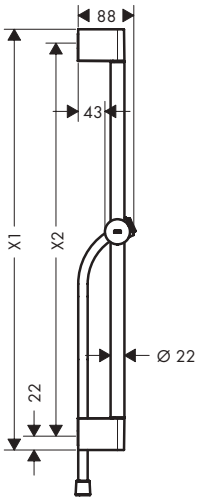

Technologies

Overview variants

Version	X1 Length shower bar (mm)	X2 Drilling distance (mm)	Shower hose length (mm)	Finish	Code no.
90	959	915	1600	Chrome	24401000
				Matt Black	24401670
				Matt White	24401700
65	669	625	1600	Chrome	24400000
				Matt Black	24400670
				Matt White	24400700

Measurements within scale drawings are in mm.
Technical specifications and units of measure are subject to change.

Unica Shower bars Croma

Features of all variants

- consists of: shower bar, slider
- hand shower holder inclination angle can be adjusted by 45°
- shower bar diameter: 22 mm
- profile pipe: round
- hand shower holder with locking mechanism
- hand shower holder inclination angle adjustable in 2 steps
- wall supports made of plastic

90

65

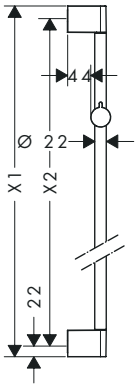

Overview variants

Version	X1 Length shower bar (mm)	X2 Drilling distance (mm)	Finish	Code no.
90	959	915	Chrome	26506000
65	669	625	Chrome	26505000

Optional parts:		Finish	Code no.
	Wall bar spacer	Chrome	97450000

Measurements within scale drawings are in mm.
Technical specifications and units of measure are subject to change.

Unica Shower bar Reno 72 cm

Features

- consists of: shower bar, slider
- pipe length: 720 mm
- shower bar diameter: 22 mm
- profile pipe: round
- variable drilling hole distance: 400 - 670 mm
- variable wall support
- hand shower holder with locking mechanism
- hand shower holder inclination angle adjustable in 2 steps
- wall supports made of plastic

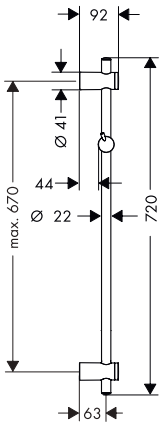

Finish	Code no.
Chrome	27704000

Unica Shower bars Crometta

Features of all variants

- shower bar diameter: 22 mm
- profile pipe: round
- translucent plastic shower slide
- hand shower holder with locking mechanism
- hand shower holder inclination angle adjustable in 2 steps
- wall supports made of plastic

90 with shower hose

65 with shower hose

90

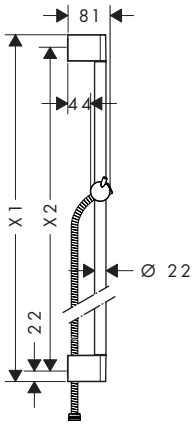

Measurements within scale drawings are in mm.
Technical specifications and units of measure are subject to change.

Unica Shower bars Crometta

Overview variants

Version	X1 Length shower bar (mm)	X2 Drilling distance (mm)	Shower hose length (mm)	Finish	Code no.
90	959	915	1600	Chrome	27614000
65	669	625	1600	Chrome	27615000
90	959	915	–	Chrome	27609000

Optional parts:		Finish	Code no.
	Casetta Soap dish C	Chrome	28678000
	Wall bar spacer	Chrome	97450000

Unica Shower bars Varia

Features of all variants

- consists of: shower bar, slider
- shower bar diameter: 22 mm
- profile pipe: round
- variable wall support
- hand shower holder inclination angle adjustable in 2 steps
- wall supports made of plastic

105

72

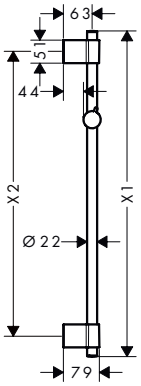

Overview variants

Version	X1 Length shower bar (mm)	X2 Drilling distance (mm)	Finish	Code no.
105	1044	max. 990 mm	Chrome	27356000
72	714	660	Chrome	27355000

Measurements within scale drawings are in mm.
Technical specifications and units of measure are subject to change.

Unica Shower bars Comfort

Features of all variants

- consists of: shower bar, storage basket, slider
- shower bar with grab handle function
- shower holder can be removed
- 90° position adjustable hand shower holder, pivots left and right, up and down
- shelf made of plastic, finish white, shelf can be removed for cleaning
- pipe length: 1100 mm
- shower bar diameter: 25 mm
- profile pipe: round
- drilling distance: 335 mm
- metal hand shower holder
- hand shower holder with locking mechanism
- wall supports of metal

right

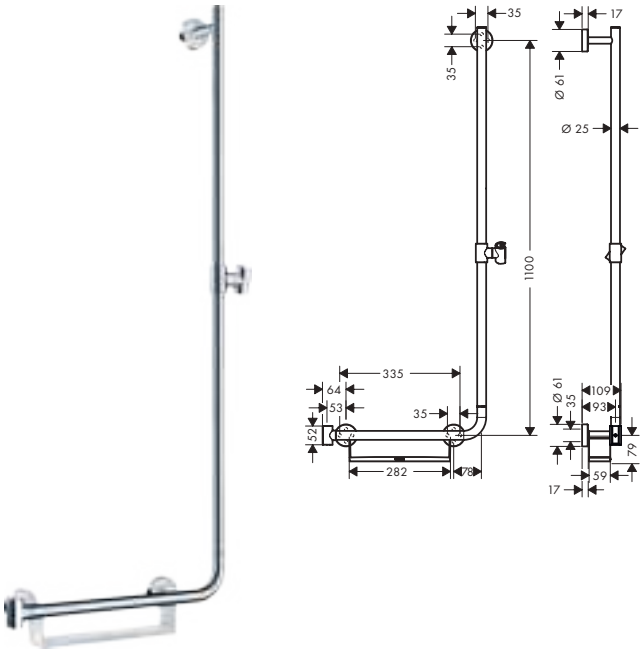

left

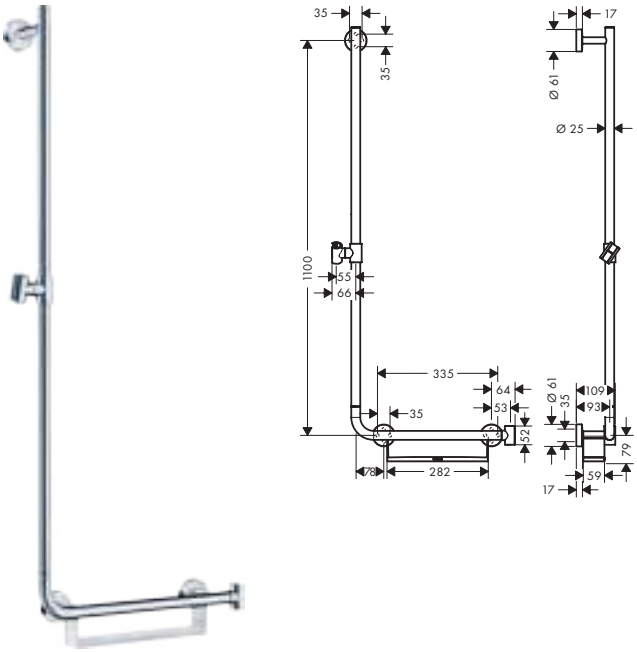

Overview variants

Version	Vertical drilling distance	Horizontal drilling distance	Finish	Code no.
right	1100	335	White/Chrome	26404400
left	1100	335	White/Chrome	26403400

Optional parts:		Finish	Code no.
	Unica Foot support Comfort	Chrome	26329000

Measurements within scale drawings are in mm.
Technical specifications and units of measure are subject to change.

Unica Shower bars Comfort

Features of all variants

- consists of: shower bar, slider
- 90° position adjustable hand shower holder, pivots left and right, up and down
- shower bar diameter: 25 mm
- profile pipe: round
- metal hand shower holder
- hand shower holder with locking mechanism
- wall supports of metal

90

65

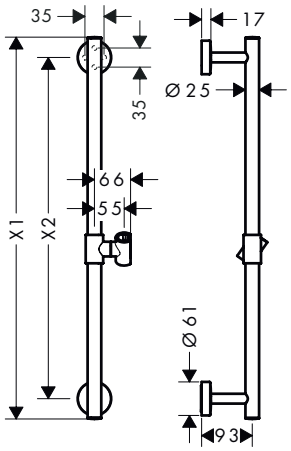

Overview variants

Version	X1 Length shower bar (mm)	X2 Drilling distance (mm)	Finish	Code no.
90	990	915	Chrome	26402000
65	700	625	Chrome	26401000

Optional parts:		Finish	Code no.
	Unica Grab handle Comfort with shelf and shower holder	White/Chrome	26328400
	Unica Foot support Comfort	Chrome	26329000

Casetta Soap dish/ shelf E

Features

- with mounting material
- length 200 mm
- surface shelf: chrome

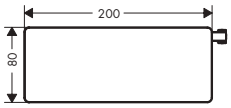

Finish	Code no.
Chrome	26511000
White/Chrome	26511400
Black/Chrome	26511600

26511400	Surface shelf: white.
26511600	Surface shelf: black.

Measurements within scale drawings are in mm.
Technical specifications and units of measure are subject to change.

Casetta Soap dish C

Features

- swivelling
- with mounting material
- height-adjustable
- for shower bars with Ø 22 mm

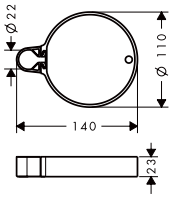

Finish	Code no.
Chrome	28678000

Casetta Soap dish E

Features

- with mounting material
- height-adjustable
- for shower bars with Ø 18 / 22 / 25 mm

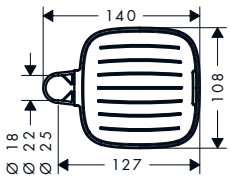

Finish	Code no.
Chrome	26519000

Casetta Soap dish S Puro

Features

- swivelling
- height-adjustable
- for shower bars with Ø 22 mm

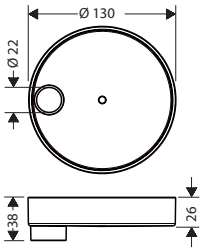

Finish	Code no.
Chrome	28679000

Measurements within scale drawings are in mm.
Technical specifications and units of measure are subject to change.

Shower holder sets

Sustainability

EcoSmart+

With a consumption of up to 60% less water than our conventional models, this shower is particularly efficient and economical, reducing water and energy costs every day and conserving valuable resources.

EcoSmart

This shower head uses up to 40% less water than our conventional showers. In this way, it reduces water and energy costs every day and conserves valuable resources. For long-lasting soothing showering pleasure.

Technologies

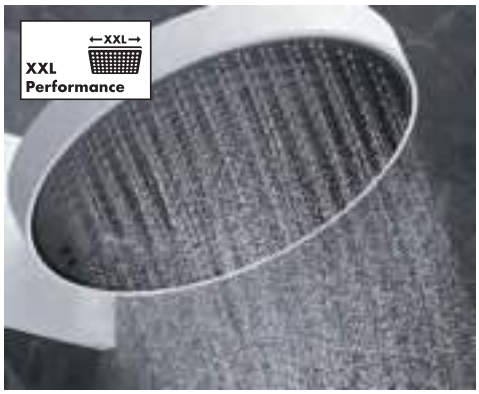

Select

The Select push button simplifies daily bathroom routines, as one simple push is all it takes for water to flow or stop. When showering, the user-friendly button can change the spray type or switch from the overhead to the hand shower.

QuickClean

Who actually likes cleaning? Limescale deposits and dirt disappear in an instant with this technology. Simply rub the flexible silicone discs or nozzles with a finger. It's fast and keeps cleaning to a minimum.

XXL Performance

XXL showering indulgence that envelops the complete body in real-life dreams of water using wonderfully soothing spray types from hand showers and overhead showers with diameters of 100 to 600 mm.

Technologies

AirPower

Mixes generous quantities of air into the water to create light, pearl-like droplets that caress the skin. The shower feels luxurious, even though little water is consumed. The spray causes less splash, reducing the time to clean the shower area.

Spray types

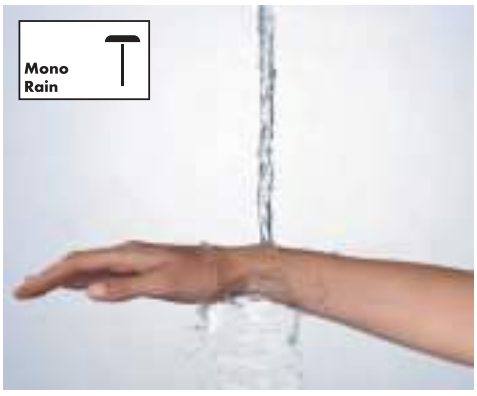

MonoRain

Focused and extremly gentle spray for feel-good wellness. The focused spray type is perfect for hydrotherapeutic showering and cold water treatments. For anyone who loves winding down in their shower or bath tub.

Normal

Versatile shower spray day in, day out. The shower rain pampers with full, light, rich droplets. The full water spray is great for washing hair and rinsing out shampoo.

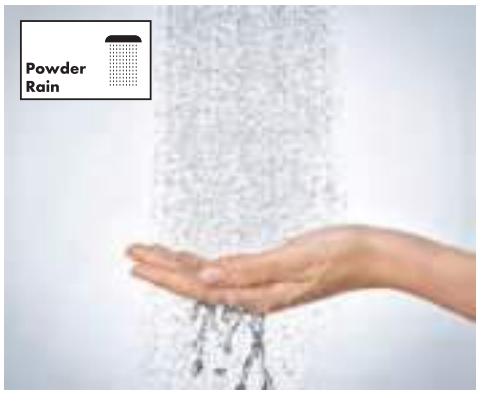

PowderRain

Relaxing, micro-fine droplets that gently and quietly envelop the body. The water is transformed into a delicate cocoon that sensually embraces the body. For sensual showering and indulgent, deep relaxation.

Spray types

Rain

Invigorating and energising everyday showering indulgence with a satisfyingly full shower rain. With its small outlets on the shower head, this spray type works efficiently to thoroughly rinse out shampoo.

RainAir

Gentle droplets enriched with air from the luxurious shower rain feel silky soft on the skin for an indulgent shower. Additionally, this spray type is efficient and thorough enough to rinse out shampoo.

Shampoo

Intense water spray that rinses out shampoo in no time at all. And not only that: The highly efficient spray invigorates the body and mind in the mornings or after exercise. For wellness all year round.

TurboRain

An invigorating multi-purpose spray that lives up to its name. With Turbo, the rain sprays ensure powerful, soothing showering. Perfect for those who want a quick and straightforward way to refresh themselves.

Whirl

Rotating water sprays to pleasantly shower away everyday tensions. Individual sprays of water flow around each other in a helical pattern, helping to relieve tension with their gentle massaging action.

Intense PowderRain

Intense spray consisting of micro-fine droplets. The number of droplets is much higher for an extremely effective way to rinse out shampoo. The water feels velvety soft and ultra-lightweight on the skin, with very little splashback.

Spray types

IntenseRain

Stimulating water sprays that wash away tiredness and immediately make the person feel nice and awake. The perfect and quick way to feel fit for the day ahead. The powerful spray also effortlessly rinses shampoo out of hair.

Massage

An invigorating spray that soothes and causes everyday stresses to flow down the drain. The water sprays are concentrated to ease tense spots. For an indulgent and relaxing spa-like shower, every single day.

Finish

Brushed Black Chrome
-340

Brushed Bronze
-140

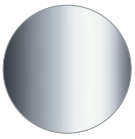

Chrome
-000

Matt Black
-670

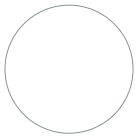

Matt White
-700

Polished Gold Optic
-990

White/ Chrome
-400

Shower holder sets

Rainfinity Shower holder sets 3jet

Features of all variants

- consists of: hand shower, shower holder, shower hose
- shower head size: 130 mm
- integrated support function
- spray type: PowderRain, Intense PowderRain, MonoRain
- convenient spray selection via Select button
- maximum flow rate at 3 bar: 14 l/min
- minimum flow pressure: 1 bar
- operating pressure: min. 1 bar/max. 6 bar
- pivot connector prevents hose from tangling
- shower hose with conical nut on both ends
- wall supports of metal
- wall mounting: screw fastening
- rinseable screen seal

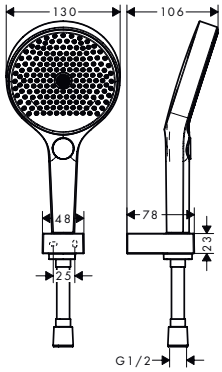

Technologies

Spray types

Overview variants

Shower head size	Shower hose length (mm)	Number of sprays	Spray types	Max. flow rate at 3 bar (l/min)	Min. flow pressure (bar)	Select	Finish	Code no.
130	1600	3	PowderRain, Intense PowderRain, MonoRain	14	1	■	Chrome	26851000
							Matt White	26851700
130	1250	3	PowderRain, Intense PowderRain, MonoRain	14	1	■	Chrome	26852000
							Matt White	26852700

Rainfinity Shower holder sets 1jet

Features of all variants

- consists of: baton hand shower, shower holder, shower hose
- shower head size: 100 x 38 mm
- integrated support function
- spray type: PowderRain
- maximum flow rate at 3 bar: 13,8 l/min
- minimum flow pressure: 1 bar
- operating pressure: min. 1 bar/max. 6 bar
- pivot connector prevents hose from tangling
- shower hose with conical nut on both ends
- wall supports of metal
- wall mounting: screw fastening
- rinseable screen seal

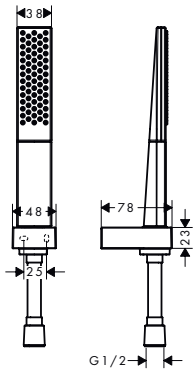

Technologies

Spray types

Overview variants

Shower head size	Shower hose length (mm)	Number of sprays	Spray types	Max. flow rate at 3 bar (l/min)	Min. flow pressure (bar)	Finish	Code no.
100	1600	1	PowderRain	13.8	1	Chrome	26856000
						Matt White	26856700

Measurements within scale drawings are in mm.
Technical specifications and units of measure are subject to change.

Rainfinity Shower holder sets 1jet

Overview variants

Shower head size	Shower hose length (mm)	Number of sprays	Spray types	Max. flow rate at 3 bar (l/min)	Min. flow pressure (bar)	Finish	Code no.
100	1250	1	PowderRain	13.8	1	Chrome	26857000
						Matt White	26857700

Raindance Select S Shower holder sets 3jet

Features of all variants

- consists of: hand shower, shower holder, shower hose
- integrated support function
- convenient spray selection via Select button
- minimum flow pressure: 1 bar
- operating pressure: min. 1 bar/max. 6 bar
- pivot connector prevents hose from tangling
- shower holder made of plastic
- wall mounting: screw fastening
- rinseable screen seal

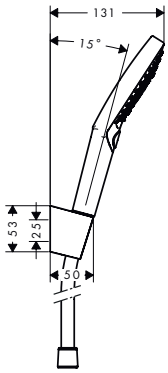

Technologies

Spray types

Overview variants

Shower head size	Shower hose length (mm)	Number of sprays	Spray types	Max. flow rate at 3 bar (l/min)	Min. flow pressure (bar)	Finish	Code no.
120	1600	3	PowderRain, Rain, Whirl	11	1	Chrome	27668000
120	1600	3	RainAir, Rain, Whirl	15	1	Chrome	26721000
						White/Chrome	26721400
120	1250	3	RainAir, Rain, Whirl	15	1	Chrome	26701000
120	1250	3	PowderRain, Rain, Whirl	11	1	Chrome	27669000

Measurements within scale drawings are in mm.
Technical specifications and units of measure are subject to change.

Raindance Select E Shower holder sets 3jet

Features of all variants

- consists of: hand shower, shower holder, shower hose
- shower head size: 120 mm
- integrated support function
- spray type: RainAir, Rain, Whirl
- convenient spray selection via Select button
- maximum flow rate at 3 bar: 14,4 l/min
- minimum flow pressure: 1 bar
- operating pressure: min. 1 bar/max. 6 bar
- pivot connector prevents hose from tangling
- shower holder made of plastic
- wall mounting: screw fastening
- rinseable screen seal

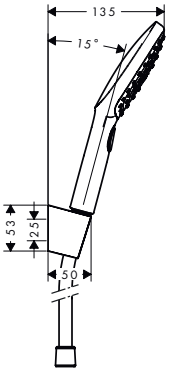

Technologies

Spray types

Overview variants

Shower head size	Shower hose length (mm)	Number of sprays	Spray types	Max. flow rate at 3 bar (l/min)	Min. flow pressure (bar)	Finish	Code no.
120	1600	3	RainAir, Rain, Whirl	14.4	1	Chrome	26720000
						White/Chrome	26720400
120	1250	3	RainAir, Rain, Whirl	14.4	1	Chrome	26700000

Pulsify Select S / Pulsify S Shower holder sets 3jet, 1jet

Features of all variants

- consists of: hand shower, shower holder, shower hose
- shower head size: 105 mm
- integrated support function
- pivot connector prevents hose from tangling
- wall supports made of plastic
- rinseable sieve insert

Relaxation **1jet**

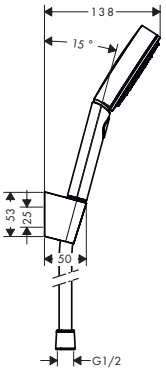

Sustainability

Technologies

Spray types

Overview variants

Shower head size	Shower hose length (mm)	Shower effect	Number of sprays	Spray types	Max. flow rate at 3 bar (l/min)	Min. flow pressure (bar)	Finish	Code no.
105	1600	Relaxation	3	PowderRain, IntenseRain, Massage spray	6.9	1.6	Chrome	24305000
							Matt Black	24305670
							Matt White	24305700

Measurements within scale drawings are in mm.
Technical specifications and units of measure are subject to change.

Pulsify Select S / Pulsify S Shower holder sets 3jet, 1jet

Overview variants

Shower head size	Shower hose length (mm)	Shower effect	Number of sprays	Spray types	Max. flow rate at 3 bar (l/min)	Min. flow pressure (bar)	Finish	Code no.
105	1600	Relaxation	3	PowderRain, IntenseRain, Massage spray	11.4	1	Chrome	24303000
							Matt Black	24303670
							Matt White	24303700
105	1250	Relaxation	3	PowderRain, IntenseRain, Massage spray	6.9	1.6	Chrome	24306000
							Matt Black	24306670
							Matt White	24306700
105	1250	Relaxation	3	PowderRain, IntenseRain, Massage spray	11.4	1	Chrome	24302000
							Matt Black	24302670
							Matt White	24302700
105	1250	1jet	1	PowderRain	5.7	1	Chrome	24307000
							Matt Black	24307670
							Matt White	24307700
105	1250	1jet	1	PowderRain	13.5	1	Chrome	24301000
							Matt Black	24301670
							Matt White	24301700

Croma Select S Shower holder sets Vario

Features of all variants

- consists of: hand shower, shower holder, shower hose
- shower head size: 110 mm
- integrated support function
- spray type: Rain, IntenseRain, TurboRain
- convenient spray selection via Select button
- maximum flow rate at 3 bar: 14,7 l/min
- minimum flow pressure: 1 bar
- operating pressure: min. 1 bar/max. 6 bar
- pivot connector prevents hose from tangling
- shower hose with conical nut on both ends
- shower holder made of plastic
- wall mounting: screw fastening
- rinseable screen seal

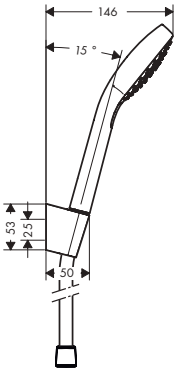

Technologies

Spray types

Overview variants

Version	Shower head size	Shower hose length (mm)	Spray types	Max. flow rate at 3 bar (l/min)	Min. flow pressure (bar)	Select	Finish	Code no.
Vario	110	1600	Rain, IntenseRain, TurboRain	14.7	1	■	White/Chrome	26411400
Vario	110	1250	Rain, IntenseRain, TurboRain	14.7	1	■	White/Chrome	26421400

Measurements within scale drawings are in mm.
Technical specifications and units of measure are subject to change.

Croma Select E Shower holder sets Vario, 1jet

Features of all variants

- consists of: hand shower, shower holder, shower hose
- shower head size: 110 mm
- integrated support function
- minimum flow pressure: 1 bar
- pivot connector prevents hose from tangling
- shower hose with conical nut on both ends
- shower holder made of plastic
- wall mounting: screw fastening
- rinseable screen seal

Vario

1jet

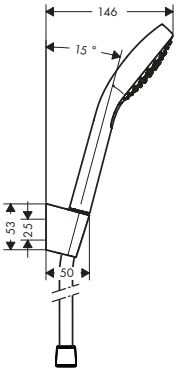

Technologies

Spray types

Overview variants

Version	Shower head size	Shower hose length (mm)	Spray types	Max. flow rate at 3 bar (l/min)	Min. flow pressure (bar)	Select	Finish	Code no.
Vario	110	1600	Rain, IntenseRain, TurboRain	14.7	1	■	White/Chrome	26413400
Vario	110	1250	Rain, IntenseRain, TurboRain	14.7	1	■	White/Chrome	26425400
1jet	110	1250	Rain	16	1	–	White/Chrome	26424400

Croma 100 Shower sets Vario

Features of all variants

- consists of: hand shower, shower holder, shower hose
- shower head size: 100 mm
- integrated support function
- spray type: Rain, normal spray, Shampoo spray, Massage spray
- spray type adjustment by turning spray disc
- maximum flow rate at 3 bar: 18 l/min
- minimum flow pressure: 1 bar
- operating pressure: min. 1 bar/max. 6 bar
- pivot connector prevents hose from tangling
- shower hose with conical nut on both ends
- shower holder made of plastic
- wall mounting: screw fastening
- rinseable screen seal

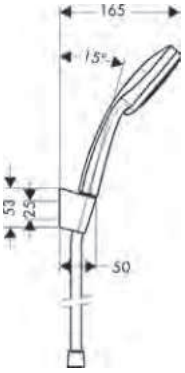

Technologies

Spray types

Measurements within scale drawings are in mm.
Technical specifications and units of measure are subject to change.

Croma 100 Shower sets Vario

Overview variants

Version	Shower head size	Shower hose length (mm)	Number of sprays	Spray types	Max. flow rate at 3 bar (l/min)	Min. flow pressure (bar)	Finish	Code no.
Vario	100	1600	4	Rain, normal spray, Shampoo spray, Massage spray	18	1	Chrome	27594000
Vario	100	1250	4	Rain, normal spray, Shampoo spray, Massage spray	18	1	Chrome	27592000

Crometta Shower holder sets Vario, 1jet

Features of all variants

- consists of: hand shower, shower holder, shower hose
- shower head size: 100 mm
- integrated support function
- maximum flow rate at 3 bar: 9 l/min
- minimum flow pressure: 1 bar
- pivot connector prevents hose from tangling
- shower holder made of plastic
- wall mounting: screw fastening
- rinseable screen seal

Vario

1jet

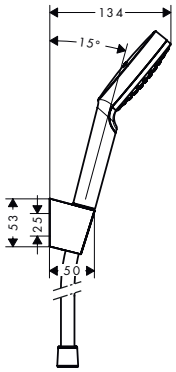

Sustainability

EcoSmart

Technologies

Quick Clean

XXL Performance

Spray types

Intense Rain

Rain

Overview variants

Version	Shower head size	Shower hose length (mm)	Number of sprays	Spray types	Max. flow rate at 3 bar (l/min)	Min. flow pressure (bar)	Finish	Code no.
Vario	100	1600	2	Rain, IntenseRain	9	1	White/Chrome	26694400
Vario	100	1250	2	Rain, IntenseRain	9	1	White/Chrome	26693400
1jet	100	1600	1	Rain	9	1	White/Chrome	26569400
1jet	100	1250	1	Rain	9	1	White/Chrome	26568400

Measurements within scale drawings are in mm.
Technical specifications and units of measure are subject to change.

Crometta 85 Shower holder sets Vario, 1jet

Features of all variants

- consists of: hand shower, shower holder, shower hose
- shower head size: 85 mm
- integrated support function
- minimum flow pressure: 1 bar
- operating pressure: min. 1 bar/max. 6 bar
- wall mounting: screw fastening
- rinseable screen seal

Vario

1jet

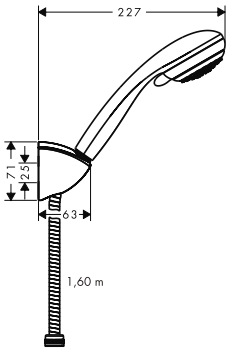

Technologies

Quick Clean

Spray types

Normal

Overview variants

Version	Shower head size	Shower hose length (mm)	Number of sprays	Spray types	Max. flow rate at 3 bar (l/min)	Min. flow pressure (bar)	Finish	Code no.
Vario	85	1600	2	Vario spray, normal spray	17	1	Chrome	27559000
Vario	85	1250	2	Vario spray, normal spray	17	1	Chrome	27558000
1jet	85	1600	1	normal spray	16	1	Chrome	27577000
1jet	85	1250	1	normal spray	16	1	Chrome	27576000

Vernis Blend Shower holder set 100 Vario EcoSmart with shower hose 160 cm

Features

- consists of: hand shower, shower holder, shower hose
- shower head size: 100 mm
- integrated support function
- spray type: Rain, IntenseRain
- spray type adjustment by turning spray disc
- maximum flow rate at 3 bar: 6,7 l/min
- minimum flow pressure: 1 bar
- operating pressure: min. 1 bar/max. 6 bar
- shower hose with conical nut on both ends
- shower holder made of plastic
- wall mounting: screw fastening
- rinseable screen seal
- EU taxonomy: max. 8 l/min - Do No Significant Harm (DNSH)

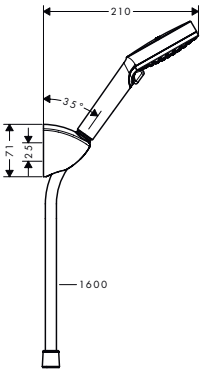

Sustainability

EcoSmart

Technologies

Quick Clean

XXL Performance

Spray types

Intense Rain

Rain

Finish	Code no.
Chrome	26278000

Measurements within scale drawings are in mm.
Technical specifications and units of measure are subject to change.

Bidette hand showers 1jet for cold water with shower holder

Features of all variants

- consists of: bidette hand shower, shut-off valve with integrated shower holder, shower hose
- shower head size: 28 mm
- integrated support function
- maximum flow rate at 3 bar: 6,2 l/min
- minimum flow pressure: 1 bar
- operating pressure: min. 1 bar/max. 10 bar
- pivot connector prevents hose from tangling
- shower hose with conical nut on both ends
- non-return valve
- wall supports of metal
- wall mounting: screw fastening
- rinseable screen seal
- not intrinsically safe against backflow
- not suitable for operation in countries with valid EN 1717
- EU taxonomy: max. 8 l/min - Do No Significant Harm (DNSH)

round

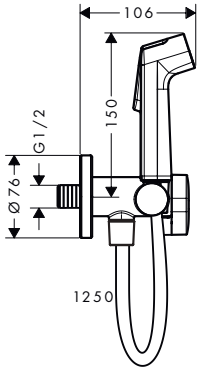

square

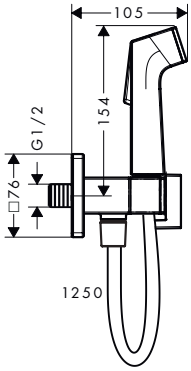

Sustainability

EcoSmart

Overview variants

Shape	Number of sprays	Max. flow rate at 3 bar (l/min)	Min. flow pressure (bar)	Finish	Code no.
round	1	6.2	1	Chrome	29230000
				Brushed Bronze	29230140
				Brushed Black Chrome	29230340
				Matt Black	29230670
				Matt White	29230700
				Polished Gold Optic	29230990
softsquare	1	6.2	1	Chrome	29231000
				Brushed Bronze	29231140
				Brushed Black Chrome	29231340
				Matt Black	29231670
				Matt White	29231700
				Polished Gold Optic	29231990

Measurements within scale drawings are in mm.
Technical specifications and units of measure are subject to change.

Bidette hand showers 1jet for mixed water with shower holder

Features of all variants

- consists of: bidette hand shower, shut-off valve with integrated shower holder, shower hose
- shower head size: 28 mm
- integrated support function
- maximum flow rate at 3 bar: 6,2 l/min
- minimum flow pressure: 1 bar
- operating pressure: min. 1 bar/max. 10 bar
- pivot connector prevents hose from tangling
- non-return valve
- wall supports of metal
- wall mounting: screw fastening
- rinseable screen seal
- not intrinsically safe against backflow
- not suitable for operation in countries with valid EN 1717
- EU taxonomy: max. 8 l/min - Do No Significant Harm (DNSH)

round

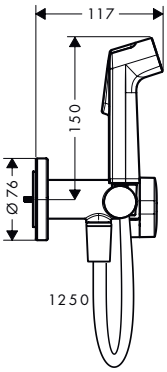

square

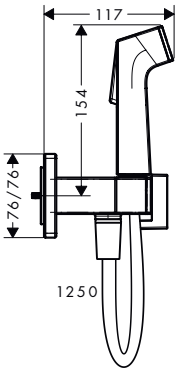

Sustainability

EcoSmart

Technologies

Quick Clean

Overview variants

Shape	Number of sprays	Max. flow rate at 3 bar (l/min)	Min. flow pressure (bar)	Finish	Code no.
round	1	6.2	1	Chrome	29232000
				Brushed Bronze	29232140
				Brushed Black Chrome	29232340
				Matt Black	29232670
				Matt White	29232700
				Polished Gold Optic	29232990
softsquare	1	6.2	1	Chrome	29233000
				Brushed Bronze	29233140
				Brushed Black Chrome	29233340
				Matt Black	29233670
				Matt White	29233700
				Polished Gold Optic	29233990

Required parts:	Code no.
Basic set for mixed water bidette	29235180
Basic set for mixed water bidette EU	29239180

Measurements within scale drawings are in mm.
Technical specifications and units of measure are subject to change.

Bidette hand shower 1jet S EcoSmart with shower holder and pressure resistant shower hose 125 cm

Features

- consists of: bidette hand shower, shower holder, shower hose
- shower head size: 28 mm
- integrated support function
- maximum flow rate at 3 bar: 6,2 l/min
- non-return valve
- shower holder made of plastic
- wall mounting: screw fastening
- rinseable screen seal
- not intrinsically safe against backflow
- we recommend using this product with an upstream shut-off valve in the line
- not suitable for operation in countries with valid EN 1717
- EU taxonomy: max. 8 l/min - Do No Significant Harm (DNSH)

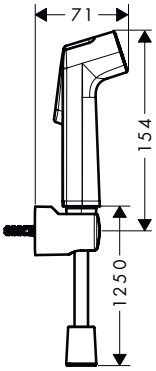

Sustainability

Finish	Code no.
Chrome	29234000

Bidette hand shower 1jet S EcoSmart with Porter S shower holder and shower hose 125 cm

Features

- consists of: bidette hand shower, shower holder, shower hose
- shower head size: 28 mm
- maximum flow rate at 3 bar: 6,2 l/min
- minimum flow pressure: 1 bar
- operating pressure: min. 1 bar/max. 10 bar
- pivot connector prevents hose from tangling
- shower hose with one conical and one cylindrical nut
- non-return valve
- shower holder made of plastic
- wall mounting: screw fastening
- rinseable screen seal
- not intrinsically safe against backflow
- not suitable for operation in countries with valid EN 1717
- EU taxonomy: max. 8 l/min - Do No Significant Harm (DNSH)

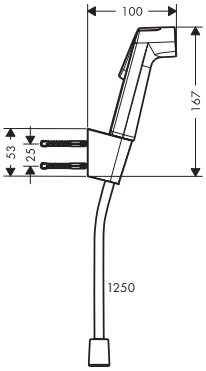

Sustainability

Finish	Code no.
Chrome	29238000
Brushed Bronze	29238140
Brushed Black Chrome	29238340
Matt Black	29238670
Matt White	29238700
Polished Gold Optic	29238990

Measurements within scale drawings are in mm.
Technical specifications and units of measure are subject to change.

Bidette hand shower 1jet EcoSmart

Features

- shower head size: 28 mm
- maximum flow rate at 3 bar: 6,2 l/min
- minimum flow pressure: 1 bar
- rinseable screen seal
- connection thread: G ½
- suitable for continous flow water heaters
- not suitable for operation in countries with valid EN 1717

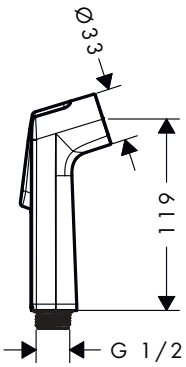

Sustainability

EcoSmart

Finish	Code no.
Chrome	29338000
Matt White	29338700
Matt Black	29338670
Brushed Bronze	29338140
Brushed Black Chrome	29338340
Polished Gold Optic	29338990

Measurements within scale drawings are in mm.
Technical specifications and units of measure are subject to change.

Shower holders

Shower holders

Shower holder Porter E

Features

- fixed holding position
- for hose with conical nut
- material: metal
- receptacle: conical
- dimensions: 30 x 48 x 78 mm (HxWxD)
- diameter drill hole: 6 mm
- 2 drill holes

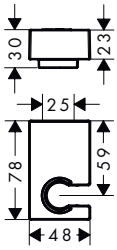

Finish	Code no.
Chrome	28387000
Brushed Bronze	28387140
Brushed Black Chrome	28387340
Matt Black	28387670
Matt White	28387700
Polished Gold Optic	28387990

Shower holder Porter C

Features

- fixed holding position
- material: plastic
- receptacle: conical
- dimensions: 71 x 45 x 63 mm (HxWxD)
- diameter drill hole: 25 mm
- 2 drill holes

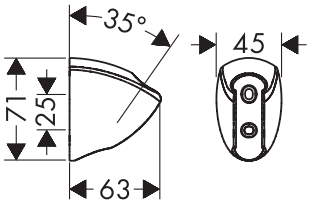

Finish	Code no.
Chrome	27521000

Shower holder Porter S

Features

- fixed holding position
- for hose with conical nut
- material: plastic
- receptacle: conical
- dimensions: 53 x 37 x 50 mm (HxWxD)
- diameter drill hole: 6 mm
- 2 drill holes

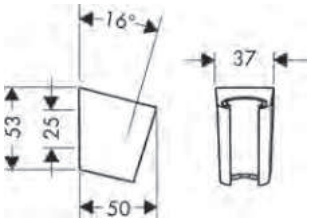

Finish	Code no.
Chrome	28331000
Brushed Bronze	28331140
Brushed Black Chrome	28331340
Matt Black	28331670
Matt White	28331700
Polished Gold Optic	28331990

Measurements within scale drawings are in mm.
Technical specifications and units of measure are subject to change.

Shower holder Porter Vario

Features

- shower holder inclination angle can be adjusted continously
- material: metal
- receptacle: conical
- dimensions: 75 x 59 x 81 mm (HxWxD)
- diameter drill hole: 6 mm
- 2 drill holes

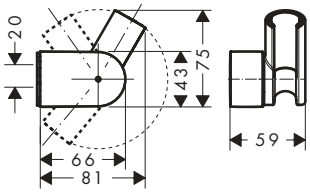

Finish	Code no.
Chrome	28328000

Rainfinity Wall outlets with shower holder

Features of all variants

- 500 mm storage shelf
- integrated support function
- metal connection angle
- non-return valve
- connection type: G ½
- for shower hoses with a conical nut
- shelf made of safety glass
- surface shelf: graphite

shower holder right

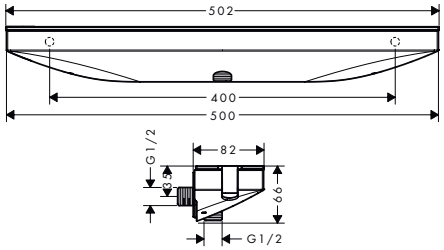

shower holder left

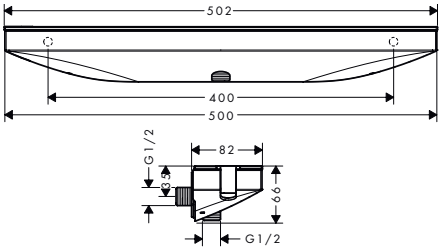

Overview variants

Shower holder	Shape	Non-return valve	Finish	Code no.
right	square	with non-return valve	Chrome	26858000
			Brushed Bronze	26858140
			Brushed Black Chrome	26858340
			Matt Black	26858670
			Matt White	26858700
			Polished Gold Optic	26858990
left	square	with non-return valve	Chrome	26843000
			Brushed Bronze	26843140
			Brushed Black Chrome	26843340
			Matt Black	26843670
			Matt White	26843700
			Polished Gold Optic	26843990

26843000
26858000 Surface shelf: mirror glass.

Measurements within scale drawings are in mm.
Technical specifications and units of measure are subject to change.

FixFit Wall outlet Porter 300 with shower holder and shower shelf

Features

- 300 mm storage shelf
- integrated support function on both sides
- metal connection angle
- non-return valve
- connection type: G ½
- for shower hoses with a conical nut
- flexible positioning, adjustment to left or right by 77.5 mm
- safety glass in white and chrom

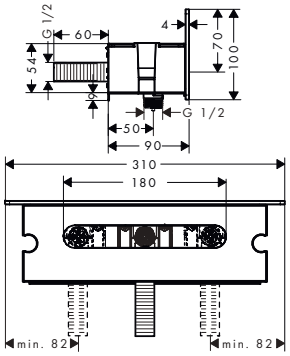

Finish	Code no.
Chrome	26456000
White/Chrome	26456400

FixFit S / FixFit E / FixFit Q Wall outlets with shower holder

Features of all variants

- consists of: wall outlet, escutcheon
- version: plastic housing with internal water supply made of plastic
- fixed holding position
- for all Hansgrohe hand showers
- material: plastic
- with non-return valve
- connection type: G ½
- receptacle: conical

round

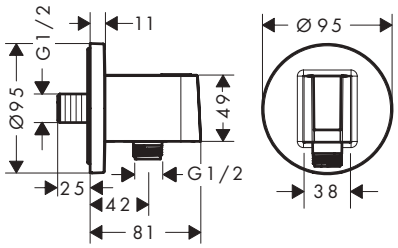

square

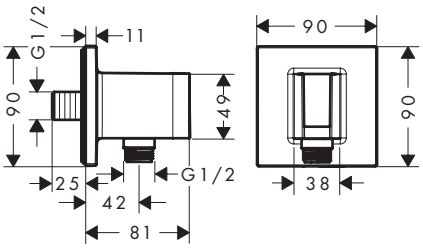

softsquare

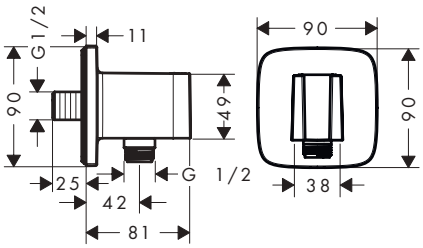

Overview variants

Shape	Non-return valve	Finish	Code no.
round	■	Chrome	26888000
		Brushed Bronze	26888140
		Brushed Black Chrome	26888340
		Matt Black	26888670
		Matt White	26888700
		Polished Gold Optic	26888990
square	■	Chrome	26889000
		Brushed Bronze	26889140
		Brushed Black Chrome	26889340
		Matt Black	26889670
		Matt White	26889700
		Polished Gold Optic	26889990

Measurements within scale drawings are in mm.
Technical specifications and units of measure are subject to change.

FixFit S / FixFit E / FixFit Q Wall outlets with shower holder

Overview variants

Shape	Non-return valve	Finish	Code no.
softsquare	■	Chrome	26887000
		Brushed Bronze	26887140
		Brushed Black Chrome	26887340
		Matt Black	26887670
		Matt White	26887700
		Polished Gold Optic	26887990

FixFit Wall outlets

Features of all variants

- connection type: G ½
- for shower hoses with conical or cylindrical nut on both sides
- material cover: plastic

without pivot joint

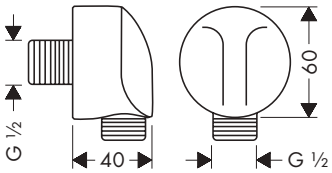

with pivot joint

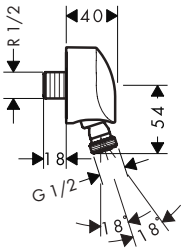

Overview variants

Ball-joint	Shape	Non-return valve	Finish	Code no.
without pivot joint	round		Chrome	27454000
			Brushed Bronze	27454140
			Brushed Black Chrome	27454340
			Matt Black	27454670
			Matt White	27454700
			Polished Gold Optic	27454990
without pivot joint	round	non-return valve	Chrome	27458000
with pivot joint	round	non-return valve	Chrome	27505000

Measurements within scale drawings are in mm.
Technical specifications and units of measure are subject to change.

FixFit Wall outlets

Features of all variants

- non-return valve
- connection type: G ½
- material cover: plastic

with pivot joint

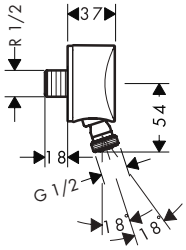

with synthetic connection angle

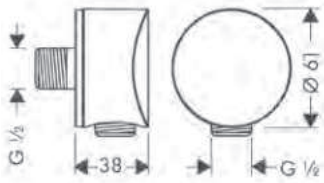

Overview variants

Special	Shape	Non-return valve	Finish	Code no.
with synthetic connection angle	round	non-return valve	Chrome	26453000
			Brushed Bronze	26453140
			Brushed Black Chrome	26453340
			Matt Black	26453670
			Matt White	26453700
			Polished Gold Optic	26453990
with pivot joint and plastic connection bracket	round	non-return valve	Chrome	27506000

FixFit Wall outlet Square with non-return valve

Features

- plastic connection angle
- non-return valve
- connection type: G ½
- material cover: plastic

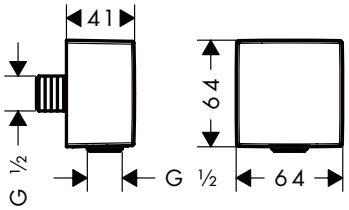

Finish	Code no.
Chrome	26455000
Brushed Bronze	26455140
Brushed Black Chrome	26455340
Matt Black	26455670
Matt White	26455700
Polished Gold Optic	26455990

Measurements within scale drawings are in mm.
Technical specifications and units of measure are subject to change.

FixFit Wall outlets with non-return valve

Features of all variants

- plastic connection angle
- non-return valve
- connection type: G ½
- material cover: plastic

with pivot joint

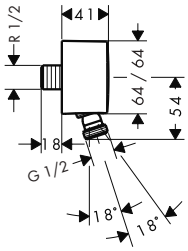

without pivot joint

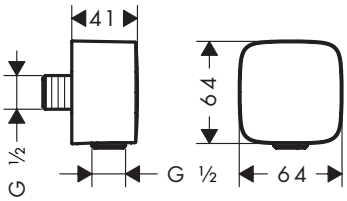

Overview variants

Special	Shape	Non-return valve	Finish	Code no.
with pivot joint	softsquare	non-return valve	Chrome	27414000
without pivot joint	softsquare	non-return valve	Chrome	26457000
			Brushed Bronze	26457140
			Brushed Black Chrome	26457340
			Matt Black	26457670
			Matt White	26457700
			Polished Gold Optic	26457990

Thread connection

Features

- reduction from DN20 to DN15

Finish	Code no.
Chrome	02024000

Shower hoses

Designflex Textile shower hoses

Features of all variants

- high-quality textile hose with braiding
- pivot connector prevents hose from tangling
- kink-protected
- water-resistant and water-repellant material
- yarns are made of recycled PET
- unique design with multi-colored braided yarns
- warm, cotton-like material feels great to the skin
- dishwasher proof up to 60 °C
- nuts shower hose: 1x conical nut, 1x cylindrical nut
- connection thread: G ½

200/160/125

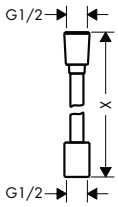

Overview variants

Length (cm)	Finish	Code no.
200	Chrome	28230000
	Brushed Bronze	28230140
	Brushed Black Chrome	28230340
	Matt Black	28230670
	Matt White	28230700
	Brushed Nickel	28230820
	Polished Gold Optic	28230990
175	Chrome	28240000
	Brushed Bronze	28240140
	Brushed Black Chrome	28240340
	Matt Black	28240670
	Matt White	28240700
	Polished Gold Optic	28240990
160	Chrome	28260000
	Brushed Bronze	28260140
	Brushed Black Chrome	28260340
	Matt Black	28260670
	Matt White	28260700
	Brushed Nickel	28260820
	Polished Gold Optic	28260990
125	Chrome	28220000
	Brushed Bronze	28220140
	Brushed Black Chrome	28220340
	Matt Black	28220670
	Matt White	28220700

Measurements within scale drawings are in mm.
Technical specifications and units of measure are subject to change.

Designflex Planet Edition Textile shower hoses

Features of all variants

- high-quality textile hose with braiding
- pivot connector prevents hose from tangling
- kink-protected
- water-resistant and water-repellant material
- yarns are made of recycled PET
- unique design with multi-colored braided yarns
- warm, cotton-like material feels great to the skin
- dishwasher proof up to 60 °C
- nuts shower hose: 1x conical nut, 1x cylindrical nut
- connection thread: G ½

160/125

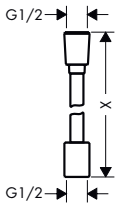

Overview variants

	Length (cm)	Finish	Code no.
	160	Sand (recycled)	28250210
	125	Sand (recycled)	28221210

Sensoflex Metal shower hoses

Features of all variants

- metal shower hose
- with plastic coating, easy to clean
- pivot connector prevents hose from tangling
- kink-protected
- nuts shower hose: conical nut on both ends
- connection thread: G ½

200/160/125

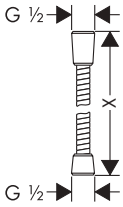

Certificates/declarations

EPD

Overview variants

	Length (cm)	Finish	Code no.
	200	Chrome	28134000
	160	Chrome	28136000
	125	Chrome	28132000

Measurements within scale drawings are in mm.
Technical specifications and units of measure are subject to change.

Isiflex Shower hoses

Features of all variants

- with plastic coating, easy to clean
- pivot connector prevents hose from tangling
- kink-protected
- nuts shower hose: conical nut on both ends
- connection thread: G ½

200/160/125

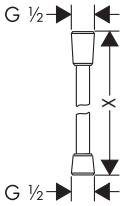

with volume control

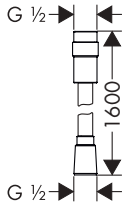

Certificates/declarations

EPD

Overview variants

Length (cm)	Volume control	Finish	Code no.
200	–	Chrome	28274000
160	–	Chrome	28276000
		Chrome/Gold Optic	28276090
		Brushed Bronze	28276140
		Brushed Gold Optic	28276250
		Polished Red Gold	28276300
		Brushed Black Chrome	28276340
		Matt Black	28276670
		Matt White	28276700
		Brushed Nickel	28276820
		Fine Brass	28276840
		Brushed Brass	28276950
		Polished Gold Optic	28276990
160	■	Chrome	28248000
125	–	Chrome	28272000
		Brushed Bronze	28272140
		Brushed Red Gold	28272310
		Brushed Black Chrome	28272340
		White	28272450
		Matt Black	28272670
		Matt White	28272700
		Stainless Steel Optic	28272800
		Brushed Nickel	28272820
		Polished Gold Optic	28272990
125	■	Chrome	28249000

Measurements within scale drawings are in mm.
Technical specifications and units of measure are subject to change.

Metaflex Shower hoses

Features of all variants

- plastic shower hose with coil winding
- with plastic coating, easy to clean
- without pivot joints
- kink-protected
- nuts shower hose: 1x conical nut, 1x cylindrical nut
- connection thread: G ½

200/160/125

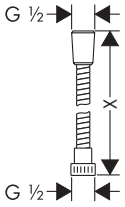

Certificates/declarations

Overview variants

	Length (cm)	Finish	Code no.
	200	Chrome	28264000
	160	Chrome	28266000
	125	Chrome	28262000

Hose duct

Features

- material: transparent plastic

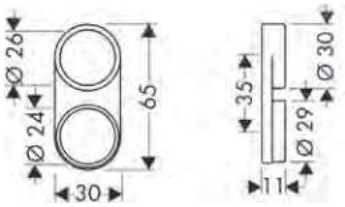

Finish	Code no.
Transparent	28072000

Thread connection

Features

- reduction from DN20 to DN15

Finish	Code no.
Chrome	02024000

Measurements within scale drawings are in mm.
Technical specifications and units of measure are subject to change.

Overhead showers

Overhead showers

	Rainfinity		Rainmaker Select		Raindance Rainmaker
Finish					
Shower head size	250/360	250/360	580	460/300	680/460
Flowrate	9 - 28.1	9 - 20.3	9.5/20	18/19	28.1
EcoSmart+	–	–	–	–	–
EcoSmart	■	■	■	–	–
Select	–	–	–	–	–
QuickClean	■	■	■	■	■
AirPower	–	–	–	–	■
Wall installation	■	■	■	■	–
Ceiling installation	–	■	–	–	■
Number of sprays	1/3	1	3	1 - 3	3
PowderRain	■	■	–	–	–
IntensePowderRain	■	–	–	–	–
Rain	–	–	■	■	–
RainAir	–	–	–	–	■
from page	168	170	171	172	173

	Raindance S			Raindance E	
Finish					
Shower head size	180 - 300	240	240	300	300/300
Flowrate	9 - 20	8 - 18.1	18.1	7.4/17	7.4/17
EcoSmart+	–	–	■	–	–
EcoSmart	■	■	–	■	■
Select	–	–	–	–	–
QuickClean	■	■	■	■	■
AirPower	■	■	–	■	■
Wall installation	–	■	■	■	–
Ceiling installation	■	–	■	–	■
Number of sprays	1	1	1	1	1
PowderRain	■	■	■	–	–
IntensePowderRain	–	–	–	–	–
Rain	–	–	–	–	–
RainAir	■	■	–	■	■
from page	178	179	179	181	182

■ available depending on the model
– not available

	Raindance Rainfall		Raindance Select S		Raindance S
Finish					
Shower head size	180	150	240/300	240/300	300
Flowrate	24	18	9/17	9/17	9/18
EcoSmart+	–	–	–	–	–
EcoSmart	–	–	■	■	■
Select	–	–	■	■	–
QuickClean	■	–	■	■	■
AirPower	■	–	■	■	■
Wall installation	■	■	■	–	■
Ceiling installation	–	–	–	■	–
Number of sprays	2	1	2	2	1
PowderRain	–	–	–	–	–
IntensePowderRain	–	–	–	–	–
Rain	–	–	■	■	–
RainAir	■	–	■	■	■
from page	175	175	176	177	177

	Raindance E			Raindance	Raindance Classic
	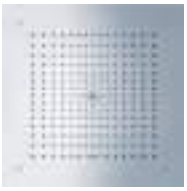				
Finish					
Shower head size	400/400	240/360	240/360	260/260	240
Flowrate	9/20	9 - 19.5	9 - 17.6	8/15	19
EcoSmart+	–	–	–	–	–
EcoSmart	■	■	■	■	–
Select	–	–	–	–	–
QuickClean	■	■	■	■	■
AirPower	■	■	■	■	■
Wall installation	–	–	■	–	■
Ceiling installation	■	■	–	■	–
Number of sprays	1	1	1	1	1
PowderRain	–	–	–	–	–
IntensePowderRain	–	–	–	–	–
Rain	–	–	–	–	–
RainAir	■	■	■	■	■
from page	183	184	181	184	185

Overhead showers

	Raindance Classic	Pulsify S			Pulsify E
Finish					
Shower head size	240	260	260	105	260
Flowrate	19	7.8/11.3	8.4/12.3	6/11.7	8/10.8
EcoSmart+	–	–	–	■	–
EcoSmart	–	■	■	–	■
Select	–	–	–	–	–
QuickClean	■	■	■	■	■
AirPower	■	–	–	–	–
Wall installation	–	■	■	■	■
Ceiling installation	■	–	■	–	–
Number of sprays	1	2	1	1	2
PowderRain	–	■	■	■	■
IntensePowderRain	–	■	–	–	■
Rain	–	–	–	–	–
RainAir	■	–	–	–	–
from page	185	186	186	187	188

	Croma 100	Crometta S	Crometta E	Crometta 85	Vernis Blend
Finish					
Shower head size	100	240	240	85	200
Flowrate	9 - 22	6.5 - 21	6.5 - 21	5.7 - 18	5.4 - 12.4
EcoSmart+	–	–	–	■	■
EcoSmart	■	■	■	–	■
Select	–	–	–	–	–
QuickClean	■	■	■	■	■
AirPower	–	–	–	–	–
Wall installation	■	■	■	■	■
Ceiling installation	■	■	■	■	■
Number of sprays	3/4	1	1	1 - 3	1
PowderRain	–	–	–	–	–
IntensePowderRain	–	–	–	–	–
Rain	■	■	■	–	■
RainAir	–	–	–	–	–
from page	193	194	195	196	197

■ available depending on the model
– not available

	Pulsify E	Croma Select S	Croma Select E	Croma E	Croma
Finish					
Shower head size	260/260	180	180	280	220/280
Flowrate	5.5 - 11.7	9	9	8/18.3	8.5 - 19
EcoSmart+	■	–	–	–	–
EcoSmart	■	■	■	■	■
Select	–	■	■	–	–
QuickClean	■	■	■	■	■
AirPower	–	–	–	■	■
Wall installation	■	■	■	■	■
Ceiling installation	■	■	■	■	■
Number of sprays	1	2	2	1	1
PowderRain	■	–	–	–	–
IntensePowderRain	–	–	–	–	–
Rain	–	–	■	–	–
RainAir	–	–	–	■	■
from page	189	190	190	191	192

	Vernis Shape	Clubmaster	
Finish			
Shower head size	230/230/170	85	90
Flowrate	5.4 - 16.1	9	19
EcoSmart+	■	–	–
EcoSmart	■	■	–
Select	–	–	–
QuickClean	■	■	■
AirPower	–	–	–
Wall installation	■	■	■
Ceiling installation	■	–	–
Number of sprays	1	3	3
PowderRain	–	–	–
IntensePowderRain	–	–	–
Rain	■	–	–
RainAir	–	–	–
from page	198	199	200

Shower systems

	Raindance Select S	Raindance S	Raindance E	Croma Select S	Croma Select E
Finish					
Shower head size	240	240	300	180	180/180
Flowrate	17	18.1	17/17.1	17	17
EcoSmart+	–	–	–	–	–
EcoSmart	–	–	–	–	–
QuickClean	■	■	■	■	■
Number of sprays	2	1	1	2	2
PowderRain	–	■	–	–	–
IntensePowderRain	–	–	–	–	–
Rain	■	–	–	■	■
RainAir	■	–	■	–	–
Single lever mixer	–	–	–	–	–
Thermostat	■	■	■	■	■
from page	208	209	210	211	211

■ available depending on the model
– not available

	Croma E	Croma	Crometta S
Finish			
Shower head size	280	280	240
Flowrate	18.3	15.6	16.7
EcoSmart+	–	–	–
EcoSmart	–	–	–
QuickClean	■	■	■
Number of sprays	1	1	1
PowderRain	–	–	–
IntensePowderRain	–	–	–
Rain	–	–	■
RainAir	■	■	–
Single lever mixer	–	–	■
Thermostat	■	■	–
from page	212	213	214

Sustainability

EcoSmart+

With a consumption of up to 60% less water than our conventional models, this shower is particularly efficient and economical, reducing water and energy costs every day and conserving valuable resources.

EcoSmart

This shower head uses up to 40% less water than our conventional showers. In this way, it reduces water and energy costs every day and conserves valuable resources. For long-lasting soothing showering pleasure.

Technologies

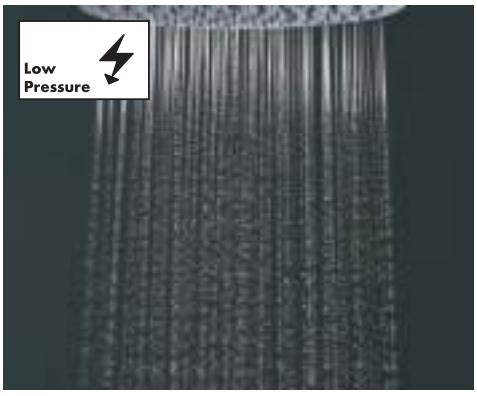

Fast Drain

An efficient and convenient way to empty the shower head and significantly reduce dripping after showering. So that nobody and no shower surface gets unintentionally caught in the rain once dry.

LowPressure

Low water pressure? Taps and showers equipped with LowPressure technology can be used even with water pressures of only 0.2 bar. Suitable for boilers/heat exchangers.

Select

The Select push button simplifies daily bathroom routines, as one simple push is all it takes for water to flow or stop. When showering, the user-friendly button can change the spray type or switch from the overhead to the hand shower.

Technologies

QuickClean

Who actually likes cleaning? Limescale deposits and dirt disappear in an instant with this technology. Simply rub the flexible silicone discs or nozzles with a finger. It's fast and keeps cleaning to a minimum.

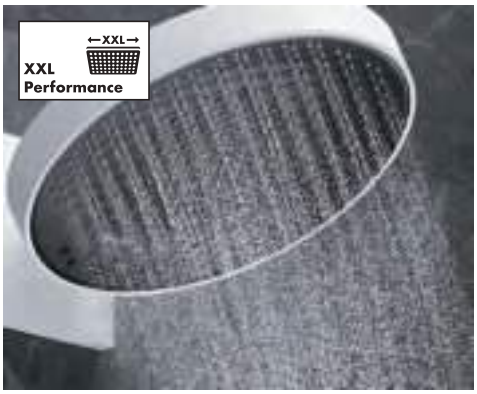

XXL Performance

XXL showering indulgence that envelops the complete body in real-life dreams of water using wonderfully soothing spray types from hand showers and overhead showers with diameters of 100 to 600 mm.

Adjustable Shower Head

The angle of the overhead shower can be tilted so that the shower rain is adjusted to suit the specific shower area or a person's height. The water sprays can then work their feel-good magic and envelop the whole body.

AirPower

Mixes generous quantities of air into the water to create light, pearl-like droplets that caress the skin. The shower feels luxurious, even though little water is consumed. The spray causes less splash, reducing the time to clean the shower area.

Spray types

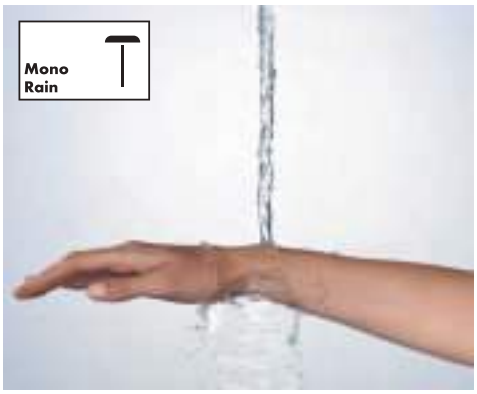

MonoRain

Focused and extremly gentle spray for feel-good wellness. The focused spray type is perfect for hydrotherapeutic showering and cold water treatments. For anyone who loves winding down in their shower or bath tub.

Normal

Versatile shower spray day in, day out. The shower rain pampers with full, light, rich droplets. The full water spray is great for washing hair and rinsing out shampoo.

PowderRain

Relaxing, micro-fine droplets that gently and quietly envelop the body. The water is transformed into a delicate cocoon that sensually embraces the body. For sensual showering and indulgent, deep relaxation.

Rain

Invigorating and energising everyday showering indulgence with a satisfyingly full shower rain. With its small outlets on the shower head, this spray type works efficiently to thoroughly rinse out shampoo.

RainAir

Gentle droplets enriched with air from the luxurious shower rain feel silky soft on the skin for an indulgent shower. Additionally, this spray type is efficient and thorough enough to rinse out shampoo.

RainAir XL

Gentle droplets enriched with air from the luxurious shower rain feel silky soft on the skin for an indulgent shower. Additionally, this spray type is efficient and thorough enough to rinse out shampoo.

Spray types

RainFlow

Powerful water stream that bathes the entire body and feels like a waterfall for wonderful relaxation. The stylish spray feels natural as it is poured over the neck and shoulders. It pampers and is like a waterfall in the bathroom.

RainStream

Lavish downpour with soft sprays that invigorate the body, mind and soul. The extraordinary spray consists of individual pearl-like droplets and is an intense, energising shower for people of all ages.

Shampoo

Intense water spray that rinses out shampoo in no time at all. And not only that: The highly efficient spray invigorates the body and mind in the mornings or after exercise. For wellness all year round.

TurboRain

An invigorating multi-purpose spray that lives up to its name. With Turbo, the rain sprays ensure powerful, soothing showering. Perfect for those who want a quick and straightforward way to refresh themselves.

Whirl

Rotating water sprays to pleasantly shower away everyday tensions. Individual sprays of water flow around each other in a helical pattern, helping to relieve tension with their gentle massaging action.

Intense PowderRain

Intense spray consisting of micro-fine droplets. The number of droplets is much higher for an extremely effective way to rinse out shampoo. The water feels velvety soft and ultra-lightweight on the skin, with very little splashback.

Spray types

IntenseRain

Stimulating water sprays that wash away tiredness and immediately make the person feel nice and awake. The perfect and quick way to feel fit for the day ahead. The powerful spray also effortlessly rinses shampoo out of hair.

Massage

An invigorating spray that soothes and causes everyday stresses to flow down the drain. The water sprays are concentrated to ease tense spots. For an indulgent and relaxing spa-like shower, every single day.

Finish

Brushed Black Chrome
-340

Brushed Brass
-950

Brushed Bronze
-140

Brushed Gold Optic
-250

Brushed Nickel
-820

Brushed Red Gold
-310

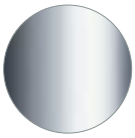

Chrome
-000

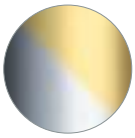

Chrome/ Gold Optic
-090

Matt Black
-670

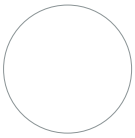

Matt White
-700

Polished Black Chrome
-330

Polished Gold Optic
-990

Polished Red Gold
-300

Stainless Steel Optic
-800

White/ Chrome
-400

Rainfinity Overhead showers 3jet with wall connector

Features of all variants

- consists of: overhead shower, wall outlet
- spray type: PowderRain, Intense PowderRain, RainStream
- frame: metal
- material spray disc: aluminium
- spray disc surface: graphite
- shower head vertically inclinable by 10-30°
- the 3 spray zones must be controlled via 3 valves or a diverter valve with 3 outlets
- overhead shower removable for cleaning
- installation: wall-mounted - based on iBox
- not suitable for continuous flow water heaters

360

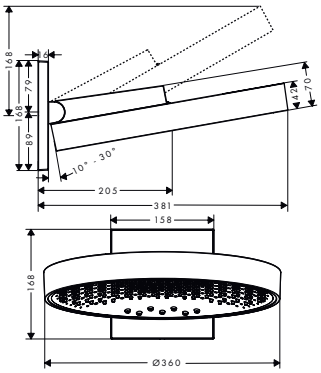

250

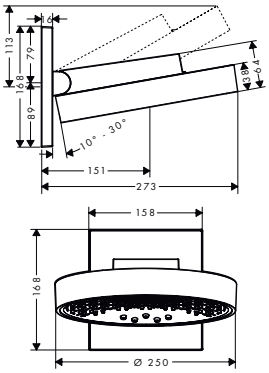

Sustainability

EcoSmart

Technologies

Quick Clean

XXL Performance

Spray types

Intense Powder Rain

Powder Rain

Rain Stream

Certificates/declarations

EPD

Overview variants

Shower head size	Number of sprays	Spray types	Max. flow rate at 3 bar (l/min)	Min. flow pressure (bar)	Finish	Available from	Code no.
360	3	PowderRain, Intense Powder-Rain, RainStream	28.1	1.7	Chrome		26234000
					Brushed Bronze		26234140
					Brushed Black Chrome		26234340
					Matt Black		26234670
					Matt White		26234700
					Polished Gold Optic		26234990
250	3	PowderRain, Intense Powder-Rain, RainStream	9	1.9	Chrome		26233000
					Matt White		26233700
					Brushed Bronze	Q4/2025	26233140
					Brushed Black Chrome	Q4/2025	26233340
					Matt Black	Q4/2025	26233670
					Polished Gold Optic	Q4/2025	26233990
250	3	PowderRain, Intense Powder-Rain, RainStream	20	1.7	Chrome		26232000
					Matt White		26232700
					Brushed Bronze	Q4/2025	26232140
					Brushed Black Chrome	Q4/2025	26232340
					Matt Black	Q4/2025	26232670
					Polished Gold Optic	Q4/2025	26232990

Required parts (choose one):			Code no.
Option 1		iBox universal 2 Basic set	01500180
	+	Adapter plate for iBox universal 2	13588000
Option 2		iBox universal Basic set	01800180

Measurements within scale drawings are in mm.
Technical specifications and units of measure are subject to change.

Rainfinity Overhead showers 1jet with wall connector

Features of all variants

- consists of: overhead shower, wall outlet
- spray type: PowderRain
- frame: metal
- material spray disc: aluminium
- spray disc surface: graphite
- shower head vertically inclinable by 10-30°
- overhead shower removable for cleaning
- installation: wall
- connection thread: G ½
- connection dimension: DN15
- not suitable for continuous flow water heaters

360

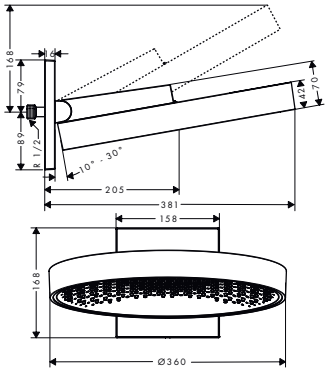

250

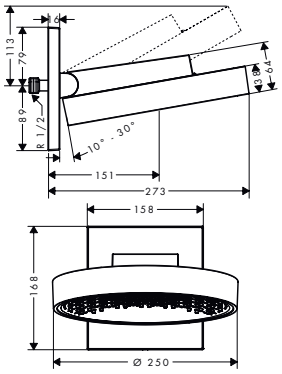

Sustainability

EcoSmart

Technologies

Quick Clean

XXL Performance

Spray types

Powder Rain

Certificates/declarations

EPD

Overview variants

Shower head size	Number of sprays	Spray types	Max. flow rate at 3 bar (l/min)	Min. flow pressure (bar)	Finish	Available from	Code no.
360	1	PowderRain	21	2	Chrome		26230000
					Brushed Bronze		26230140
					Brushed Black Chrome		26230340
					Matt Black		26230670
					Matt White		26230700
					Polished Gold Optic		26230990
250	1	PowderRain	9.4	1.8	Chrome		26227000
					Matt White		26227700
					Matt Black	Q4/2025	26227670
					Brushed Bronze	Q4/2025	26227140
					Brushed Black Chrome	Q4/2025	26227340
					Polished Gold Optic	Q4/2025	26227990
250	1	PowderRain	19	1.4	Chrome		26226000
					Matt White		26226700
					Brushed Bronze	Q4/2025	26226140
					Brushed Black Chrome	Q4/2025	26226340
					Matt Black	Q4/2025	26226670
					Polished Gold Optic	Q4/2025	26226990

Measurements within scale drawings are in mm.
Technical specifications and units of measure are subject to change.

Rainfinity Overhead showers 1jet

Features of all variants

- spray type: PowderRain
- ball-joint: overhead shower angle (2 x 5°) adjustable
- frame: metal
- material spray disc: aluminium
- spray disc surface: graphite
- overhead shower removable for cleaning
- connection thread: G ½
- connection dimension: DN15

360

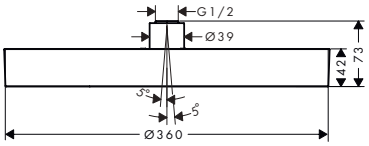

250

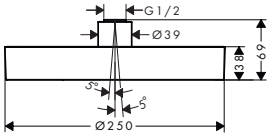

Sustainability

EcoSmart

Technologies

Quick Clean

XXL Performance

Spray types

Powder Rain

Certificates/declarations

EPD

Overview variants

Shower head size	Number of sprays	Spray types	Max. flow rate at 3 bar (l/min)	Min. flow pressure (bar)	Finish	Code no.
360	1	PowderRain	20.3	2	Chrome	26231000
					Brushed Bronze	26231140
					Brushed Black Chrome	26231340
					Matt Black	26231670
					Matt White	26231700
					Polished Gold Optic	26231990
250	1	PowderRain	9	1.1	Chrome	26229000
					Brushed Bronze	26229140
					Brushed Black Chrome	26229340
					Matt Black	26229670
					Matt White	26229700
					Polished Gold Optic	26229990
250	1	PowderRain	16	1	Chrome	26228000
					Brushed Bronze	26228140
					Brushed Black Chrome	26228340
					Matt Black	26228670
					Matt White	26228700
					Polished Gold Optic	26228990

Required parts (choose one):	Finish	Code no.
Shower arm E 39 cm with rectangular shaft	Chrome	27694000
	Brushed Bronze	27694140
	Brushed Black Chrome	27694340
	Matt Black	27694670
	Matt White	27694700
	Polished Gold Optic	27694990

Measurements within scale drawings are in mm.
Technical specifications and units of measure are subject to change.

Rainfinity Overhead showers 1jet

Required parts (choose one):		Finish	Code no.
	Ceiling connector S 10 cm	Chrome	27393000
		Brushed Bronze	27393140
		Brushed Black Chrome	27393340
		Matt Black	27393670
		Matt White	27393700
		Polished Gold Optic	27393990
	Ceiling connector S 30 cm	Chrome	27389000
		Brushed Bronze	27389140
		Brushed Black Chrome	27389340
		Matt Black	27389670
		Matt White	27389700
		Polished Gold Optic	27389990

Rainmaker Select Overhead showers 3jet with wall connector

Features of all variants

- consists of: overhead shower, wall outlet
- shower head size: 586 x 258 mm
- spray type: Rain, RainFlow, MonoRain
- material spray disc: plexiglas
- spray disc surface: easy cleanable spray disc in glass optics
- the 3 spray zones must be controlled via 3 valves or a diverter valve with 3 outlets
- spray disc removable for cleaning
- installation: wall-mounted - based on iBox
- connection type: basic set
- not suitable for continuous flow water heaters

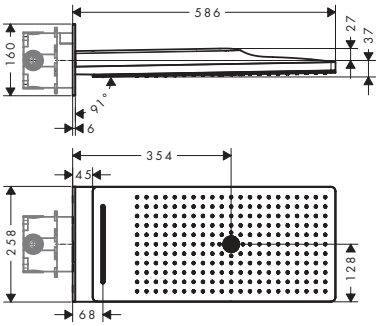

Sustainability

EcoSmart

Technologies

Quick Clean

XXL Performance

Spray types

Mono Rain

Rain

RainFlow

Certificates/declarations

EPD

Overview variants

Shower head size	Number of sprays	Spray types	Max. flow rate at 3 bar (l/min)	Min. flow pressure (bar)	Finish	Code no.
580	3	Rain, RainFlow, MonoRain	9.5	2	White/Chrome	24011400
580	3	Rain, RainFlow, MonoRain	20	1.7	White/Chrome	24001400

Required parts (choose one):			Code no.
Option 1		iBox universal 2 Basic set	01500180
+		Adapter plate for iBox universal 2	13588000
Option 2		iBox universal Basic set	01800180

Optional parts:		Finish	Code no.
	RainSelect Thermostat for concealed installation for 4 functions	Chrome	15382000

For more information about this product, please see the next page.

Measurements within scale drawings are in mm.
Technical specifications and units of measure are subject to change.

Rainmaker Select Overhead showers 3jet with wall connector

Optional parts:		Finish	Code no.
	RainSelect Thermostat for concealed installation for 4 functions with integrated shower holder	Chrome	15357000
	ShowerSelect Glass Valve for concealed installation for 3 functions	White/Chrome	15736400
	ShowerSelect Glass Thermostat HighFlow for concealed installation for 1 function and additional outlet	White/Chrome	15735400

Rainmaker Select Overhead shower 3jet, 2jet, 1jet with shower arm

Features of all variants

- consists of: overhead shower, shower arm, escutcheon
- function from: 12 l/min
- minimum flow pressure: 1,5 bar
- material spray disc: plexiglas
- spray disc surface: easy cleanable spray disc in glass optics
- spray disc removable for cleaning
- overhead shower removable for cleaning
- connection dimension: DN15
- not suitable for continuous flow water heaters

3 spray types

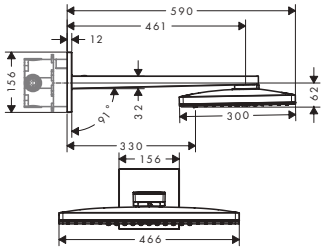

2 spray types

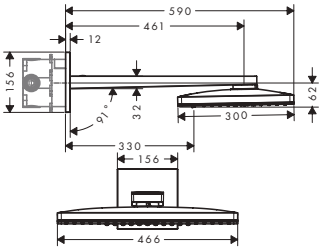

1 spray type

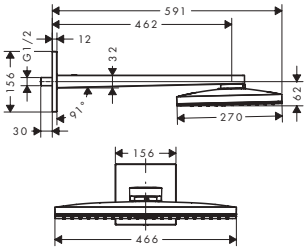

Technologies

Spray types

Certificates/declarations

Overview variants

Shower head size	Length shower arm (mm)	Number of sprays	Spray types	Max. flow rate at 3 bar (l/min)	Min. flow pressure (bar)	Finish	Code no.
460/300	461	3	Rain, RainStream, MonoRain	18	1.5	White/Chrome	24007400
460/300	461	2	Rain, RainStream	18	1.5	White/Chrome	24005400
460/300	462	1	Rain	19	1.5	White/Chrome	24003400

Required parts (choose one):			Code no.
Option 1		iBox universal 2 Basic set	01500180
+		Adapter plate for iBox universal 2	13588000
Option 2		iBox universal Basic set	01800180

Measurements within scale drawings are in mm.
Technical specifications and units of measure are subject to change.

Rainmaker Select Overhead shower 3jet, 2jet, 1jet with shower arm

Optional parts:	For	Finish	Code no.
RainSelect Thermostat for concealed installation for 4 functions	24007XXX 24003XXX	Chrome	15382000
RainSelect Thermostat for concealed installation for 3 functions		Chrome	15381000
RainSelect Thermostat for concealed installation for 2 functions		Chrome	15380000
ShowerSelect Glass Valve for concealed installation for 3 functions	24007XXX 24005XXX	White/Chrome	15736400
ShowerSelect Glass Thermostat HighFlow for concealed installation for 1 function and additional outlet	24007XXX	White/Chrome	15735400
RainSelect Thermostat for concealed installation for 3 functions with integrated shower holder	24005XXX	Chrome	15356000
ShowerSelect Glass Thermostat HighFlow for concealed installation	24005XXX	White/Chrome	15734400
ShowerSelect Glass Thermostat for concealed installation for 2 functions	24003XXX	White/Chrome	15738400

Raindance Rainmaker Overhead shower 680/460 3jet with lighting

Features

- shower head size: 680 x 460 mm
- spray type: RainAir, Whirl, RainAir XL
- flow rate RainAir spray at 3 bar: 20 l/min
- flow rate RainAir XL at 3 bar: 28,1 l/min
- flow rate WhirlAir spray at 3 bar: 22 l/min
- maximum flow rate at 3 bar: 28,1 l/min
- minimum flow pressure: 3 bar
- material spray disc: metal
- the 3 spray zones must be controlled via 3 valves or a diverter valve with 3 outlets
- installation: ceiling mounted
- connection thread: G ½
- connection dimension: DN20
- connection type: basic set
- with integrated lighting
- illuminant: LED
- power supply: 12 V DC
- transformer power supply for concealed installation 12 V, 18 W
- input voltage: 100 - 240 V AC / 50 / 60 Hz
- output voltage: 12 V DC
- colour temperature: 2700 K
- energy efficiency class: contains light sources of energy efficiency class G
- not suitable for continuous flow water heaters
- TÜV certified

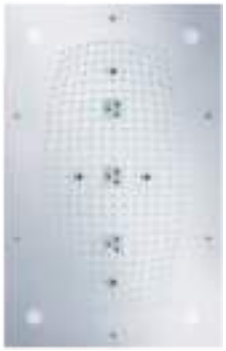

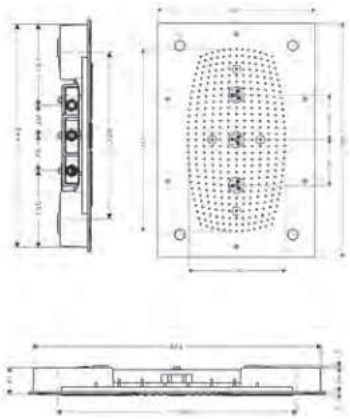

Technologies

Spray types

Finish	Code no.
Chrome	28418000

Required parts:	Code no.
Raindance Rainmaker Basic set for overhead shower 680/460 3jet	28414180

Optional parts:	Finish	Code no.
ShowerSelect Valve for concealed installation for 3 functions	Chrome	15764000

For more information about this product, please see the next page.

Measurements within scale drawings are in mm.
Technical specifications and units of measure are subject to change.

Raindance Rainmaker Overhead shower 680/460 3jet with lighting

Optional parts:		Finish	Code no.
	ShowerSelect Thermostat HighFlow for concealed installation for 1 function and additional outlet	Chrome	15761000

Raindance Rainmaker Overhead shower 680/460 3jet without lighting

Features

- shower head size: 680 x 460 mm
- spray type: RainAir, Whirl, RainAir XL
- flow rate RainAir spray at 3 bar: 20 l/min
- flow rate RainAir XL at 3 bar: 28,1 l/min
- flow rate WhirlAir spray at 3 bar: 22 l/min
- maximum flow rate at 3 bar: 28,1 l/min
- minimum flow pressure: 3 bar
- material spray disc: metal
- the 3 spray zones must be controlled via 3 valves or a diverter valve with 3 outlets
- installation: ceiling mointed
- connection thread: G ½
- connection dimension: DN15
- connection type: basic set
- suitable for continous flow water heaters
- TÜV certified

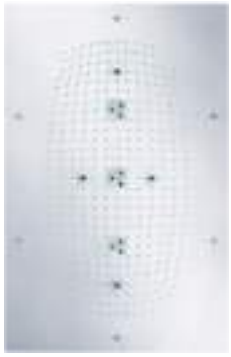

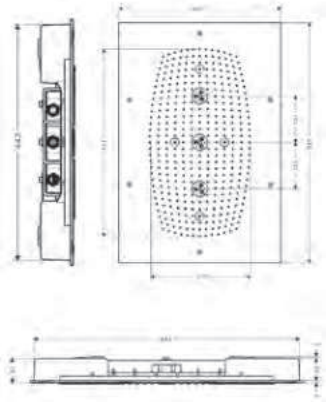

Technologies

Spray types

Certificates/declarations

Finish	Code no.
Chrome	28417000

Required parts:		Code no.
	Raindance Rainmaker Basic set for overhead shower 680/460 3jet	28414180

Optional parts:		Finish	Code no.
	ShowerSelect Thermostat HighFlow for concealed installation for 1 function and additional outlet	Chrome	15761000
	ShowerSelect Valve for concealed installation for 3 functions	Chrome	15764000

Measurements within scale drawings are in mm.
Technical specifications and units of measure are subject to change.

Raindance Rainfall Overhead shower 180 2jet

Features

- consists of: overhead shower, wall outlet
- shower head size: 180 mm
- spray type: RainAir, RainFlow
- flow rate RainFlow spray at 3 bar: 24 l/min
- flow rate RainAir spray at 3 bar: 17 l/min
- maximum flow rate at 3 bar: 24 l/min
- minimum flow pressure: 2 bar
- material spray disc: metal
- spray disc surface: chrome
- the 2 spray zones must be controlled via 2 valves or a diverter valve with 2 outlets
- installation: wall-mounted - based on iBox
- connection dimension: DN15
- suitable for continous flow water heaters

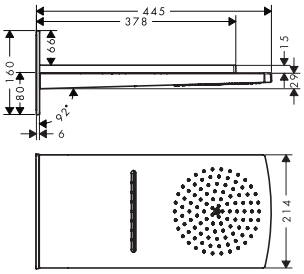

Technologies

AirPower | Quick Clean | XXL Performance

Spray types

Rain Air | RainFlow

Certificates/declarations

EPD

Finish	Code no.
Chrome	28433000

Required parts (choose one):			Code no.
Option 1		iBox universal 2 Basic set	01500180
	+	Adapter plate for iBox universal 2	13588000
Option 2		iBox universal Basic set	01800180

Optional parts:		Finish	Code no.
	ShowerSelect Valve for concealed installation for 3 functions	Chrome	15764000
	ShowerSelect Thermostat HighFlow for concealed installation	Chrome	15760000

Raindance Rainfall Overhead showers 1jet

Features of all variants

- shower head size: 153 mm
- maximum flow rate at 3 bar: 18 l/min
- minimum flow pressure: 1,7 bar
- ball-joint: overhead shower angle adjustable
- installation: wall
- connection thread: G ½
- connection dimension: DN15
- suitable for continous flow water heaters

RainFlow

Stream

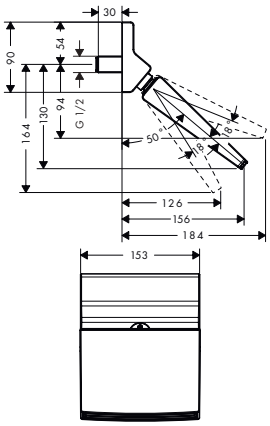

Technologies

XXL Performance

Spray types

RainFlow | Rain Stream

Certificates/declarations

EPD

For more information about this product, please see the next page.

Measurements within scale drawings are in mm.
Technical specifications and units of measure are subject to change.

Raindance Rainfall Overhead showers 1jet

Overview variants

Shower head size	Number of sprays	Spray types	Max. flow rate at 3 bar (l/min)	Min. flow pressure (bar)	Finish	Code no.
150	1	RainFlow	18	1.7	Chrome	26442000
150	1	Stream	18	1.7	Chrome	26443000

Optional parts:		Finish	Code no.
	ShowerSelect Thermostat for concealed installation for 1 function	Chrome	15762000

Raindance Select S Overhead showers 2jet with shower arm

Features of all variants

- consists of: overhead shower, shower arm
- spray type: RainAir, Rain
- Select button on overhead shower
- ball-joint: overhead shower angle adjustable
- material spray disc: metal
- spray disc surface: chrome
- shower arm length: 390 mm
- spray disc removable for cleaning
- installation: wall
- connection thread: G ½
- connection dimension: DN15
- suitable for continous flow water heaters

300

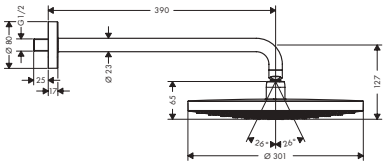

240

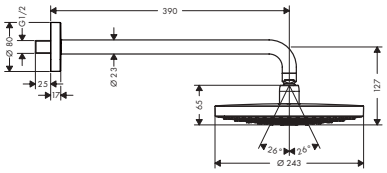

Sustainability

EcoSmart

Technologies

Select, AirPower, Quick Clean, XXL Performance

Spray types

Rain, Rain Air

Certificates/declarations

EPD

Overview variants

Shower head size	Number of sprays	Spray types	Max. flow rate at 3 bar (l/min)	Min. flow pressure (bar)	Finish	Code no.
300	2	RainAir, Rain	17	1.5	Chrome	27378000
					White/Chrome	27378400
240	2	RainAir, Rain	9	1.5	Chrome	26470000
240	2	RainAir, Rain	17	1	Chrome	26466000
					White/Chrome	26466400

26466400
27378400 — Spray disc surface: white.

Measurements within scale drawings are in mm.
Technical specifications and units of measure are subject to change.

Raindance Select S Overhead showers 2jet with ceiling connector

Features of all variants

- consists of: overhead shower, ceiling connector
- spray type: RainAir, Rain
- Select button on overhead shower
- ball-joint: overhead shower angle adjustable
- material spray disc: metal
- spray disc surface: chrome
- brass ceilling connector
- ceiling connection length: 100 mm
- spray disc removable for cleaning
- installation: ceiling mounting
- connection thread: G ½
- connection dimension: DN15
- suitable for continous flow water heaters

300

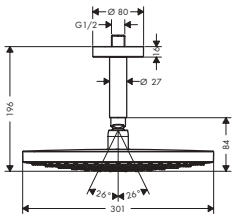

240

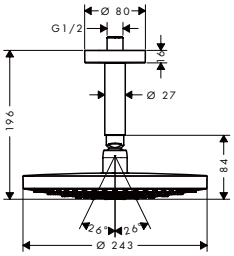

Sustainability

EcoSmart

Technologies

Select, AirPower, Quick Clean, XXL Performance

Spray types

Rain, Rain Air

Certificates/declarations

EPD

Overview variants

Shower head size	Number of sprays	Spray types	Max. flow rate at 3 bar (l/min)	Min. flow pressure (bar)	Finish	Code no.
300	2	RainAir, Rain	17	1.5	Chrome	27337000
					White/Chrome	27337400
240	2	RainAir, Rain	9	1.5	Chrome	26469000
240	2	RainAir, Rain	17	1	Chrome	26467000

27337400 Spray disc surface: white.

Raindance S Overhead showers 1jet with shower arm

Features of all variants

- consists of: overhead shower, shower arm
- shower head size: 300 mm
- spray type: RainAir
- minimum flow pressure: 1,5 bar
- ball-joint: overhead shower angle adjustable
- material spray disc: metal
- spray disc removable for cleaning
- installation: wall
- connection thread: G ½
- connection dimension: DN15

460 mm

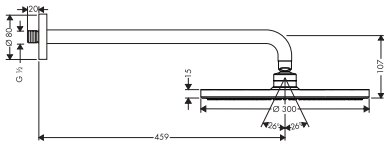

390 mm

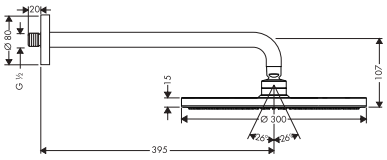

Sustainability

EcoSmart

Technologies

AirPower, Quick Clean, XXL Performance

Spray types

Rain Air

Certificates/declarations

EPD

Overview variants

Shower head size	Length shower arm (mm)	Number of sprays	Spray types	Max. flow rate at 3 bar (l/min)	Min. flow pressure (bar)	Finish	Code no.
300	460	1	RainAir	18	1.5	Chrome	27492000
300	390	1	RainAir	9	1.5	Chrome	26601000
300	390	1	RainAir	18	1.5	Chrome	27493000

Measurements within scale drawings are in mm.
Technical specifications and units of measure are subject to change.

Raindance S Overhead showers 1jet with ceiling connector

Features of all variants

- consists of: overhead shower, ceiling connector
- ball-joint: overhead shower angle adjustable
- material spray disc: metal
- ceiling connection length: 100 mm
- spray disc removable for cleaning
- installation: ceiling mounting
- connection thread: G ½
- connection dimension: DN15
- suitable for continous flow water heaters

300

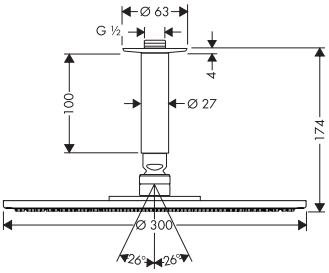

240

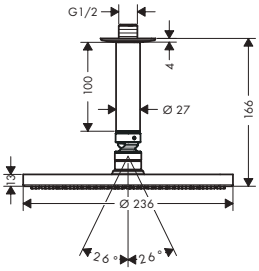

180

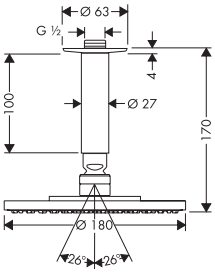

Sustainability

EcoSmart

Technologies

AirPower · Quick Clean · XXL Performance

Spray types

Powder Rain · Rain Air

Certificates/declarations

EPD

Overview variants

Shower head size	Number of sprays	Spray types	Max. flow rate at 3 bar (l/min)	Min. flow pressure (bar)	Finish	Code no.
300	1	RainAir	9	1.5	Chrome	26600000
300	1	RainAir	20	1.5	Chrome	27494000
240	1	PowderRain	18.1	1.1	Chrome	27620000
240	1	RainAir	9	1.5	Chrome	27463000
240	1	RainAir	18	1	Chrome	27477000
180	1	RainAir	18	1.2	Chrome	27478000

Measurements within scale drawings are in mm.
Technical specifications and units of measure are subject to change.

Raindance S Overhead showers 1jet with shower arm

Features of all variants

- consists of: overhead shower, shower arm
- shower head size: 240 mm
- ball-joint: overhead shower angle adjustable
- material spray disc: metal
- spray disc removable for cleaning
- installation: wall
- connection thread: G ½
- connection dimension: DN15
- suitable for continous flow water heaters

PowderRain

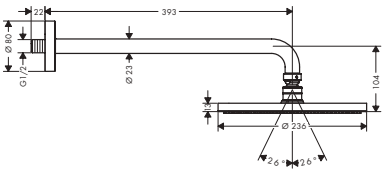

RainAir

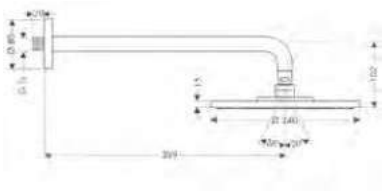

Sustainability

EcoSmart

Technologies

AirPower | Quick Clean | XXL Performance

Spray types

Powder Rain | Rain Air

Certificates/declarations

EPD

Overview variants

Shower head size	Number of sprays	Spray types	Max. flow rate at 3 bar (l/min)	Min. flow pressure (bar)	Length shower arm (mm)	Finish	Code no.
240	1	PowderRain	18.1	1.1	393	Chrome	27607000
240	1	RainAir	8	1.5	389	Chrome	27461000
240	1	RainAir	18	1	389	Chrome	27474000

Raindance S Overhead showers 1jet

Features of all variants

- shower head size: 240 mm
- spray type: PowderRain
- minimum flow pressure: 1,1 bar
- ball-joint: overhead shower angle adjustable
- material spray disc: metal
- spray disc removable for cleaning
- installation: ceiling or wall
- connection thread: G ½
- connection dimension: DN15
- suitable for continous flow water heaters

PowderRain

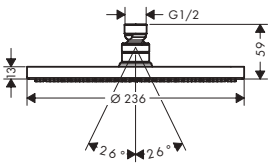

Sustainability

Eco Smart+

Technologies

Quick Clean | XXL Performance

Spray types

Powder Rain

Certificates/declarations

EPD

For more information about this product, please see the next page.

Measurements within scale drawings are in mm.
Technical specifications and units of measure are subject to change.

Raindance S Overhead showers 1jet

Overview variants

Shower head size	Number of sprays	Spray types	Max. flow rate at 3 bar (l/min)	Min. flow pressure (bar)	Finish	Available from	Code no.
240	1	PowderRain		1.1	Chrome	Q1/2025	28821000
					Brushed Bronze	Q1/2025	28821140
					Brushed Black Chrome	Q1/2025	28821340
					Matt Black	Q1/2025	28821670
					Matt White	Q1/2025	28821700
					Polished Gold Optic	Q1/2025	28821990
240	1	PowderRain	18.1	1.1	Chrome		27623000
					Matt Black		27623670
					Brushed Bronze	Q1/2025	27623140
					Matt White		27623700
					Brushed Black Chrome	Q1/2025	27623340
					Polished Gold Optic	Q1/2025	27623990

Required parts (choose one):	For	Finish	Code no.
Shower arm 38.9 cm	27623XXX	Chrome	27413000
		Brushed Bronze	27413140
		Brushed Black Chrome	27413340
		Matt Black	27413670
		Matt White	27413700
		Polished Gold Optic	27413990
Ceiling connector S 10 cm	27623XXX	Chrome	27393000
		Brushed Bronze	27393140
		Brushed Black Chrome	27393340
		Matt Black	27393670
		Matt White	27393700
		Polished Gold Optic	27393990
Ceiling connector S 30 cm	27623XXX	Chrome	27389000
		Brushed Bronze	27389140
		Brushed Black Chrome	27389340
		Matt Black	27389670
		Matt White	27389700
		Polished Gold Optic	27389990

Measurements within scale drawings are in mm.
Technical specifications and units of measure are subject to change.

Raindance E Overhead showers 1jet with shower arm

Features of all variants

- consists of: overhead shower, shower arm
- spray type: RainAir
- ball-joint: overhead shower angle adjustable
- material spray disc: metal
- spray disc removable for cleaning
- installation: wall
- connection thread: G ½
- connection dimension: DN15
- suitable for continous flow water heaters

360 with shower arm 39 cm

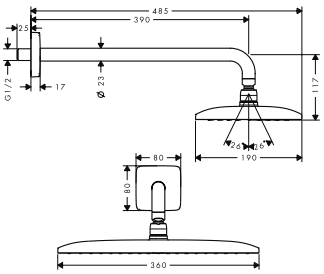

360 with shower arm 24 cm

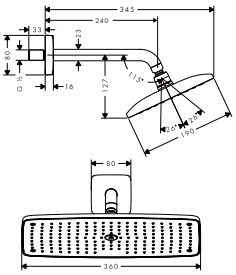

240

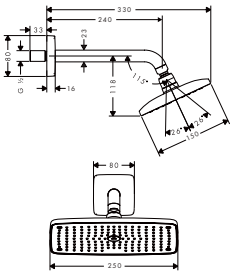

Sustainability

EcoSmart

Technologies

AirPower | Quick Clean | XXL Performance

Spray types

Rain Air

Certificates/declarations

EPD

Overview variants

Shower head size	Number of sprays	Spray types	Max. flow rate at 3 bar (l/min)	Min. flow pressure (bar)	Length shower arm (mm)	Finish	Code no.
360	1	RainAir	9	1.5	390	Chrome	26605000
360	1	RainAir	16.5	1.3	390	Chrome	27376000
360	1	RainAir	16.5	1.3	240	Chrome	27371000
240	1	RainAir	9	2	240	Chrome	27375000
240	1	RainAir	17.6	1.1	240	Chrome	27370000

Raindance E Overhead showers 1jet with shower arm

Features of all variants

- consists of: overhead shower, shower arm
- shower head size: 300 x 300 mm
- spray type: RainAir
- ball-joint: overhead shower angle adjustable
- material spray disc: metal
- shower arm length: 390 mm
- spray disc removable for cleaning
- installation: wall
- connection thread: G ½
- connection dimension: DN15
- suitable for continous flow water heaters

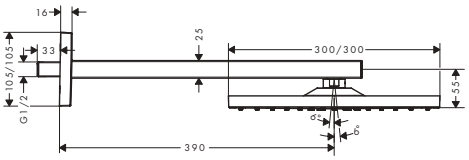

Sustainability

EcoSmart

Technologies

AirPower | Quick Clean | XXL Performance

Spray types

Rain Air

Certificates/declarations

EPD

For more information about this product, please see the next page.

Measurements within scale drawings are in mm.
Technical specifications and units of measure are subject to change.

Raindance E Overhead showers 1jet with shower arm

Overview variants

Shower head size	Number of sprays	Spray types	Max. flow rate at 3 bar (l/min)	Min. flow pressure (bar)	Finish	Available from	Code no.
300	1	RainAir	7.4	1.3	Chrome		26239000
					Matt Black	Q2/2025	26239670
					Matt White	Q2/2025	26239700
					Brushed Bronze	Q2/2025	26239140
					Brushed Black Chrome	Q2/2025	26239340
					Polished Gold Optic	Q2/2025	26239990
300	1	RainAir	17	1.6	Chrome		26238000
					Brushed Bronze		26238140
					Brushed Black Chrome		26238340
					Matt Black		26238670
					Matt White		26238700
					Polished Gold Optic		26238990

Raindance E Overhead showers 1jet with ceiling connector

Features of all variants

- consists of: overhead shower, ceiling connector
- shower head size: 300 x 300 mm
- spray type: RainAir
- ball-joint: overhead shower angle adjustable
- material spray disc: metal
- brass ceilling connector
- spray disc removable for cleaning
- installation: ceiling mounting
- connection thread: G ½
- connection dimension: DN15
- suitable for continous flow water heaters

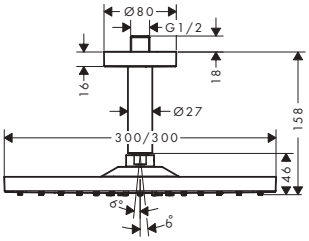

Sustainability

EcoSmart

Technologies

AirPower · Quick Clean · XXL Performance

Spray types

Rain Air

Certificates/declarations

EPD

Overview variants

Shower head size	Number of sprays	Spray types	Max. flow rate at 3 bar (l/min)	Min. flow pressure (bar)	Finish	Available from	Code no.
300	1	RainAir	7.4	1.3	Chrome		26251000
					Brushed Bronze	Q2/2025	26251140
					Brushed Black Chrome	Q2/2025	26251340
					Matt Black	Q2/2025	26251670
					Matt White	Q2/2025	26251700
					Polished Gold Optic	Q2/2025	26251990

Measurements within scale drawings are in mm.
Technical specifications and units of measure are subject to change.

Raindance E Overhead showers 1jet with ceiling connector

Overview variants

Shower head size	Number of sprays	Spray types	Max. flow rate at 3 bar (l/min)	Min. flow pressure (bar)	Finish	Available from	Code no.
300	1	RainAir	17	1.4	Chrome		26250000
					Brushed Bronze		26250140
					Brushed Black Chrome		26250340
					Matt Black		26250670
					Matt White		26250700
					Polished Gold Optic		26250990

Raindance E Overhead showers 1jet

Features of all variants

- shower head size: 400 x 400 mm
- spray type: RainAir
- material spray disc: metal
- spray disc removable for cleaning
- installation: flush with the ceiling
- connection thread: G ½
- connection dimension: DN15
- connection type: basic set
- suitable for continous flow water heaters

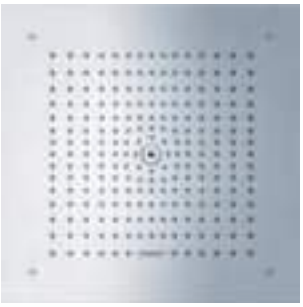

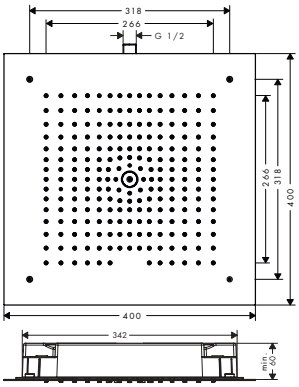

Sustainability

EcoSmart

Technologies

AirPower | Quick Clean | XXL Performance

Spray types

Rain Air

Certificates/declarations

EPD

Overview variants

Shower head size	Number of sprays	Spray types	Max. flow rate at 3 bar (l/min)	Min. flow pressure (bar)	Finish	Available from	Code no.
400/400	1	RainAir	9	2	Chrome		26253000
					Brushed Bronze	Q2/2025	26253140
					Brushed Black Chrome	Q2/2025	26253340
					Matt Black	Q2/2025	26253670
					Matt White	Q2/2025	26253700
					Polished Gold Optic	Q2/2025	26253990
400/400	1	RainAir	20	1.2	Chrome		26252000
					Matt Black	Q2/2025	26252670
					Matt White	Q2/2025	26252700
					Brushed Bronze	Q2/2025	26252140
					Brushed Black Chrome	Q2/2025	26252340
					Polished Gold Optic	Q2/2025	26252990

Required parts:	Code no.
Raindance E Basic set for overhead shower 400/400 1jet	26254180

Measurements within scale drawings are in mm.
Technical specifications and units of measure are subject to change.

Raindance E Overhead showers 1jet with ceiling connector

Features of all variants

- consists of: overhead shower, ceiling connector
- spray type: RainAir
- ball-joint: overhead shower angle adjustable
- material spray disc: metal
- brass ceilling connector
- ceiling connection length: 100 mm
- spray disc removable for cleaning
- installation: ceiling mounting
- connection thread: G ½
- connection dimension: DN15

360

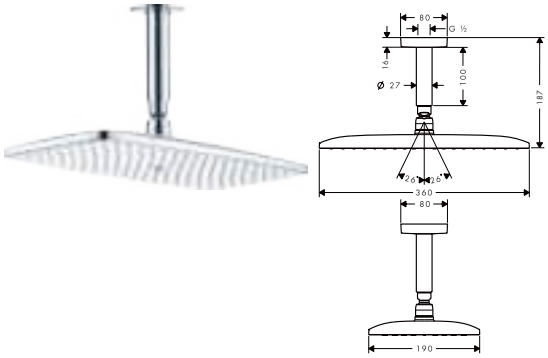

240

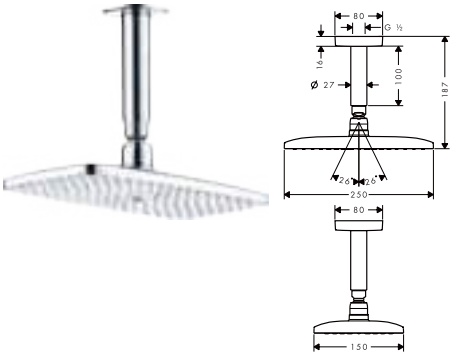

Sustainability

EcoSmart

Technologies

AirPower | Quick Clean | XXL Performance

Spray types

Rain Air

Certificates/declarations

EPD

Overview variants

Shower head size	Number of sprays	Spray types	Max. flow rate at 3 bar (l/min)	Min. flow pressure (bar)	Finish	Code no.
360	1	RainAir	9	1.5	Chrome	26604000
360	1	RainAir	16.5	1.3	Chrome	27381000
240	1	RainAir	19.5	1	Chrome	27380000

Raindance Overhead showers 1jet

Features of all variants

- shower head size: 260 x 260 mm
- spray type: RainAir
- material spray disc: metal
- spray disc removable for cleaning
- installation: flush with the ceiling
- connection thread: G ½
- connection dimension: DN15
- suitable for continous flow water heaters

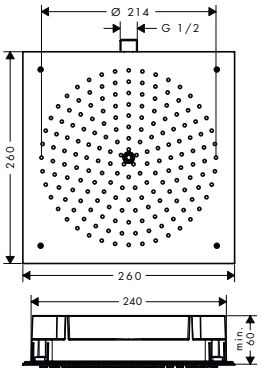

Sustainability

EcoSmart

Technologies

AirPower | Quick Clean | XXL Performance

Spray types

Rain Air

Certificates/declarations

EPD

Overview variants

Shower head size	Number of sprays	Spray types	Max. flow rate at 3 bar (l/min)	Min. flow pressure (bar)	Finish	Code no.
260/260	1	RainAir	8	1.2	Chrome	26481000
260/260	1	RainAir	15	1.7	Chrome	26472000

Required parts:	Code no.
Raindance Basic set for overhead shower 260/260 1jet	26471180

Measurements within scale drawings are in mm.
Technical specifications and units of measure are subject to change.

Raindance Overhead showers 1jet

Optional parts:		Finish	Code no.
	ShowerSelect Thermostat for concealed installation for 2 functions	Chrome	15763000

Raindance Classic Overhead shower 240 1jet with shower arm

Features

- consists of: overhead shower, shower arm
- shower head size: 270 mm
- spray type: RainAir
- flow rate RainAir spray at 3 bar: 19 l/min
- maximum flow rate at 3 bar: 19 l/min
- minimum flow pressure: 1 bar
- ball-joint: overhead shower angle adjustable
- material spray disc: metal
- shower arm length: 390 mm
- spray disc removable for cleaning
- installation: wall
- connection thread: G ½
- connection dimension: DN15

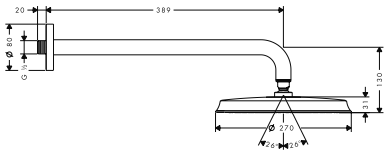

Technologies

AirPower | Quick Clean | XXL Performance

Spray types

Rain Air

Certificates/declarations

EPD

Finish	Code no.
Chrome	27424000
Chrome/Gold Optic	27424090

Raindance Classic Overhead shower 240 1jet with ceiling connector

Features

- consists of: overhead shower, ceiling connector
- shower head size: 270 mm
- spray type: RainAir
- flow rate RainAir spray at 3 bar: 19 l/min
- maximum flow rate at 3 bar: 19 l/min
- minimum flow pressure: 1 bar
- ball-joint: overhead shower angle adjustable
- material spray disc: metal
- ceiling connection length: 100 mm
- spray disc removable for cleaning
- installation: ceiling mounting
- connection thread: G ½
- connection dimension: DN15
- suitable for continous flow water heaters

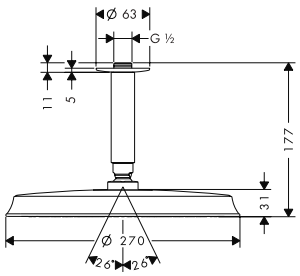

Technologies

AirPower | Quick Clean | XXL Performance

Spray types

Rain Air

Finish	Code no.
Chrome	27405000
Chrome/Gold Optic	27405090

Measurements within scale drawings are in mm.
Technical specifications and units of measure are subject to change.

Pulsify S Overhead showers 2jet with wall connector

Features of all variants

- consists of: overhead shower, wall outlet
- shower head size: 260 mm
- spray type: PowderRain, Intense PowderRain
- Fast Drain empties the overhead shower from an angle of 10°
- ball-joint: ball-joint for easy angle adjustment, variable from 15 - 36°
- material spray disc: plastic
- spray disc surface: graphite
- overhead shower removable for cleaning
- installation: wall-mounted - based on iBox
- connection type: basic set

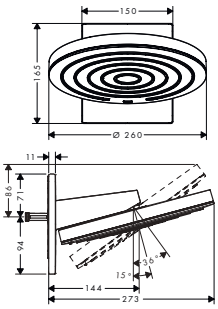

Sustainability

EcoSmart

Technologies

Adjustable Shower Head · Fast Drain · Quick Clean · XXL Performance

Spray types

Intense Powder Rain · Powder Rain

Overview variants

Shower head size	Number of sprays	Spray types	Max. flow rate at 3 bar (l/min)	Min. flow pressure (bar)	Finish	Code no.
260	2	PowderRain, Intense PowderRain	7.8	1.6	Chrome	24151000
					Matt Black	24151670
					Matt White	24151700
260	2	PowderRain, Intense PowderRain	11.3	1.4	Chrome	24150000
					Matt Black	24150670
					Matt White	24150700

Required parts (choose one):			Code no.
Option 1		iBox universal 2 Basic set	01500180
+		Adapter plate for iBox universal 2	13588000
Option 2		iBox universal Basic set	01800180

Pulsify S Overhead showers 1jet

Features of all variants

- shower head size: 260 mm
- spray type: PowderRain
- Fast Drain empties the overhead shower from an angle of 10°
- ball-joint: overhead shower angle adjustable
- material spray disc: plastic
- spray disc surface: graphite
- installation: ceiling or wall
- connection thread: G ½
- connection dimension: DN15
- suitable for continous flow water heaters

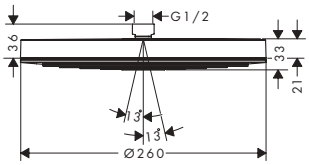

Sustainability

EcoSmart

Technologies

Adjustable Shower Head · Fast Drain · Quick Clean · XXL Performance

Spray types

Powder Rain

Measurements within scale drawings are in mm.
Technical specifications and units of measure are subject to change.

Pulsify S Overhead showers 1jet

Overview variants

Shower head size	Number of sprays	Spray types	Max. flow rate at 3 bar (l/min)	Min. flow pressure (bar)	Finish	Code no.
260	1	PowderRain	8.4	0.8	Chrome	24141000
					Brushed Bronze	24141140
					Matt Black	24141670
					Matt White	24141700
260	1	PowderRain	12.3	1	Chrome	24140000
					Brushed Bronze	24140140
					Matt Black	24140670
					Matt White	24140700

Required parts (choose one):		Finish	Code no.
	Pulsify Wall connector for overhead shower 260	Chrome	24149000
		Brushed Bronze	24149140
		Matt Black	24149670
		Matt White	24149700
	Shower arm S 39 cm	Chrome	24357000
		Brushed Bronze	24357140
		Matt Black	24357670
		Matt White	24357700
	Ceiling connector S 10 cm	Chrome	27393000
		Brushed Bronze	27393140
		Matt Black	27393670
		Matt White	27393700
	Ceiling connector S 30 cm	Chrome	27389000
		Brushed Bronze	27389140
		Matt Black	27389670
		Matt White	27389700

Pulsify S Overhead showers 1jet

Features of all variants

- shower head size: 105 mm
- spray type: PowderRain
- ball-joint: overhead shower angle adjustable
- material spray disc: plastic
- spray disc surface: graphite
- installation: ceiling or wall
- connection thread: G ½
- connection dimension: DN15
- suitable for continous flow water heaters

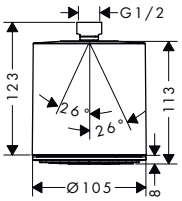

Sustainability

Eco Smart+

Technologies

Adjustable Shower Head
Quick Clean
XXL Performance

Spray types

Powder Rain

For more information about this product, please see the next page.

Measurements within scale drawings are in mm.
Technical specifications and units of measure are subject to change.

Pulsify S Overhead showers 1jet

Overview variants

Shower head size	Number of sprays	Spray types	Max. flow rate at 3 bar (l/min)	Min. flow pressure (bar)	Finish	Code no.
105	1	PowderRain	6	1	Chrome	24132000
					Matt Black	24132670
					Brushed Bronze	24132140
					Matt White	24132700
105	1	PowderRain	11.7	0.8	Chrome	24130000
					Brushed Bronze	24130140
					Matt Black	24130670
					Matt White	24130700

Required parts:		Finish	Code no.
	Pulsify Wall connector for overhead shower 105	Chrome	24139000
		Brushed Bronze	24139140
		Matt Black	24139670
		Matt White	24139700

Pulsify E Overhead showers 2jet with wall connector

Features of all variants

- consists of: overhead shower, wall outlet
- shower head size: 260 x 260 mm
- spray type: PowderRain, Intense PowderRain
- minimum flow pressure: 1,3 bar
- Fast Drain empties the overhead shower from an angle of 10°
- ball-joint: overhead shower angle adjustable
- material spray disc: plastic
- spray disc surface: graphite
- overhead shower removable for cleaning
- installation: wall-mounted - based on iBox
- connection type: basic set
- suitable for continous flow water heaters

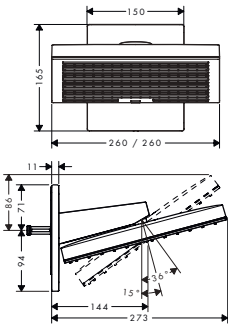

Sustainability

EcoSmart

Technologies

Adjustable Shower Head | Fast Drain | Quick Clean | XXL Performance

Spray types

Intense Powder Rain | Powder Rain

Overview variants

Shower head size	Number of sprays	Spray types	Max. flow rate at 3 bar (l/min)	Min. flow pressure (bar)	Finish	Code no.
260	2	PowderRain, Intense PowderRain	8	1.3	Chrome	24351000
					Matt Black	24351670
					Matt White	24351700
260	2	PowderRain, Intense PowderRain	10.8	1.3	Chrome	24350000
					Matt Black	24350670
					Matt White	24350700

Required parts (choose one):			Code no.
Option 1		iBox universal 2 Basic set	01500180
	+	Adapter plate for iBox universal 2	13588000
Option 2		iBox universal Basic set	01800180

Measurements within scale drawings are in mm.
Technical specifications and units of measure are subject to change.

Pulsify E Overhead showers 1jet

Features of all variants

- shower head size: 260 x 260 mm
- spray type: PowderRain
- minimum flow pressure: 0,9 bar
- Fast Drain empties the overhead shower from an angle of 10°
- material spray disc: plastic
- spray disc surface: graphite
- installation: ceiling or wall
- connection thread: G ½
- suitable for continous flow water heaters

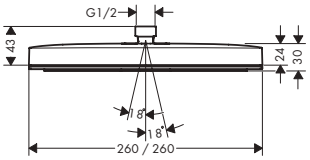

Sustainability

EcoSmart | Eco Smart+

Technologies

Adjustable Shower Head | Fast Drain | Quick Clean | XXL Performance

Spray types

Powder Rain

Overview variants

Shower head size	Number of sprays	Spray types	Max. flow rate at 3 bar (l/min)	Min. flow pressure (bar)	Finish	Code no.
260/260	1	PowderRain	5.5	0.9	Chrome	24333000
					Brushed Bronze	24333140
					Matt Black	24333670
					Matt White	24333700
260/260	1	PowderRain	8.4	0.9	Chrome	24331000
					Brushed Bronze	24331140
					Matt Black	24331670
					Matt White	24331700
260/260	1	PowderRain	11.7	0.9	Chrome	24330000
					Brushed Bronze	24330140
					Matt Black	24330670
					Matt White	24330700

Required parts (choose one):	Finish	Code no.
Shower arm E 39 cm	Chrome	24337000
	Brushed Bronze	24337140
	Matt Black	24337670
	Matt White	24337700
Ceiling connector E 10 cm	Chrome	24338000
	Brushed Bronze	24338140
	Matt Black	24338670
	Matt White	24338700
Ceiling connector E 30 cm	Chrome	24339000
	Brushed Bronze	24339140
	Matt Black	24339670
	Matt White	24339700

Measurements within scale drawings are in mm.
Technical specifications and units of measure are subject to change.

Croma Select S Overhead shower 180 2jet EcoSmart

Features

- shower head size: 180 mm
- spray type: Rain, IntenseRain
- flow rate Rain spray at 3 bar: 9 l/min
- flow rate IntenseRain spray at 3 bar: 9 l/min
- maximum flow rate at 3 bar: 9 l/min
- minimum flow pressure: 1 bar
- Select button on overhead shower
- ball-joint: overhead shower angle adjustable
- material spray disc: plastic
- spray disc removable for cleaning
- installation: ceiling or wall
- connection thread: G ½
- connection dimension: DN15
- suitable for continous flow water heaters

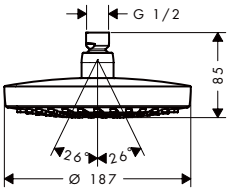

Sustainability

EcoSmart

Technologies

Select · Quick Clean · XXL Performance

Spray types

Intense Rain · Rain

Finish	Code no.
Chrome	26523000

Optional parts:	Finish	Code no.
Shower arm 38.9 cm	Chrome	27413000
Ceiling connector S 10 cm	Chrome	27393000
Ceiling connector S 30 cm	Chrome	27389000

Croma Select E Overhead shower 180 2jet EcoSmart

Features

- shower head size: 187 x 187 mm
- spray type: Rain, IntenseRain
- flow rate Rain spray at 3 bar: 9 l/min
- flow rate IntenseRain spray at 3 bar: 9 l/min
- maximum flow rate at 3 bar: 9 l/min
- minimum flow pressure: 1 bar
- Select button on overhead shower
- ball-joint: overhead shower angle adjustable
- material spray disc: plastic
- spray disc removable for cleaning
- installation: ceiling or wall
- connection thread: G ½
- connection dimension: DN15
- suitable for continous flow water heaters

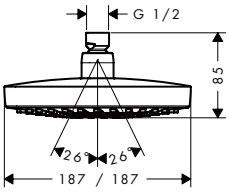

Sustainability

EcoSmart

Technologies

Select · Quick Clean · XXL Performance

Spray types

Intense Rain · Rain

Certificates/declarations

EPD

Finish	Code no.
Chrome	26528000
White/Chrome	26528400

Required parts (choose one):	Finish	Code no.
Shower arm E 38.9 cm	Chrome	27446000

Measurements within scale drawings are in mm.
Technical specifications and units of measure are subject to change.

Croma Select E Overhead shower 180 2jet EcoSmart

Required parts (choose one):	Finish	Code no.
Ceiling connector E 10 cm	Chrome	27467000
Ceiling connector E 30 cm	Chrome	27388000

Croma E Overhead showers 1jet

Features of all variants

- shower head size: 280 x 170 mm
- spray type: RainAir
- ball-joint: overhead shower angle adjustable
- material spray disc: metal
- spray disc removable for cleaning
- installation: ceiling or wall
- connection thread: G ½
- connection dimension: DN15
- suitable for continous flow water heaters

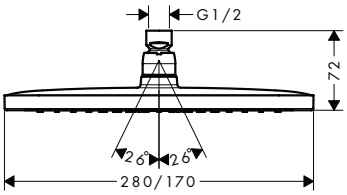

Sustainability

EcoSmart

Technologies

AirPower · Quick Clean · XXL Performance

Spray types

Rain Air

Certificates/declarations

EPD

Overview variants

Shower head size	Number of sprays	Spray types	Max. flow rate at 3 bar (l/min)	Min. flow pressure (bar)	Finish	Code no.
280	1	RainAir	8	1.4	Chrome	26258000
280	1	RainAir	18.3	1.1	Chrome	26257000

Optional parts:	Finish	Code no.
Shower arm E 38.9 cm	Chrome	27446000
Ceiling connector E 10 cm	Chrome	27467000
Ceiling connector E 30 cm	Chrome	27388000

Measurements within scale drawings are in mm.
Technical specifications and units of measure are subject to change.

Croma Overhead showers 1jet

Features of all variants

- spray type: RainAir
- ball-joint: overhead shower angle adjustable
- material spray disc: metal
- spray disc removable for cleaning
- installation: ceiling or wall
- connection thread: G ½
- connection dimension: DN15
- suitable for continous flow water heaters

280

220

Sustainability

EcoSmart

Technologies

AirPower · Quick Clean · XXL Performance

Spray types

Rain Air

Certificates/declarations

EPD

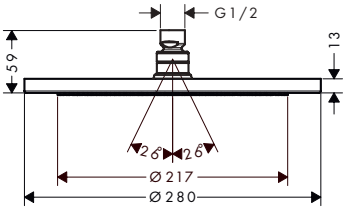

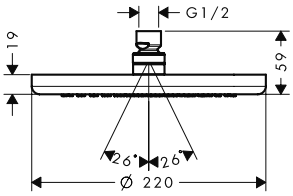

Overview variants

Shower head size	Number of sprays	Spray types	Max. flow rate at 3 bar (l/min)	Min. flow pressure (bar)	Finish	Code no.
280	1	RainAir	8.5	2	Chrome	26221000
					Brushed Bronze	26221140
					Brushed Black Chrome	26221340
					Matt Black	26221670
					Matt White	26221700
					Polished Gold Optic	26221990
280	1	RainAir	15.6	1.5	Chrome	26220000
					Brushed Bronze	26220140
					Brushed Black Chrome	26220340
					Matt Black	26220670
					Matt White	26220700
					Polished Gold Optic	26220990
220	1	RainAir	9	1.3	Chrome	26465000
220	1	RainAir	19	1	Chrome	26464000

Optional parts:		Finish	Code no.
	Shower arm 38.9 cm	Chrome	27413000
		Brushed Bronze	27413140
		Brushed Black Chrome	27413340
		Matt Black	27413670
		Matt White	27413700
		Polished Gold Optic	27413990

Measurements within scale drawings are in mm.
Technical specifications and units of measure are subject to change.

Croma Overhead showers 1jet

Optional parts:		Finish	Code no.
	Ceiling connector S 10 cm	Chrome	27393000
		Brushed Bronze	27393140
		Brushed Black Chrome	27393340
		Matt Black	27393670
		Matt White	27393700
	Ceiling connector S 30 cm	Chrome	27389000
		Brushed Bronze	27389140
		Brushed Black Chrome	27389340
		Matt Black	27389670
		Matt White	27389700

Croma 100 Overhead showers Vario, Multi

Features of all variants

- shower head size: 100 mm
- minimum flow pressure: 1,2 bar
- adjustment with shift on overhead shower
- ball-joint: overhead shower angle adjustable
- material spray disc: plastic
- spray disc surface: grey
- installation: ceiling or wall
- connection thread: G ½
- connection dimension: DN15
- suitable for continous flow water heaters

Vario

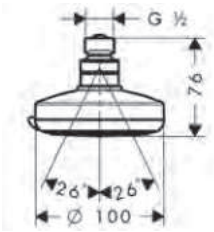

Multi

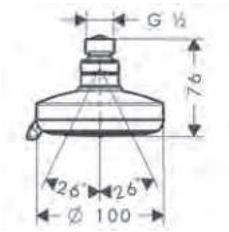

Sustainability

EcoSmart

Technologies

Quick Clean

XXL Performance

Spray types

Massage

Mono Rain

Normal

Rain

Shampoo

Certificates/declarations

EPD

Overview variants

Version	Shower head size	Number of sprays	Spray types	Max. flow rate at 3 bar (l/min)	Min. flow pressure (bar)	Finish	Code no.
Vario		4	Rain, Massage spray, Shampoo spray, normal spray	9	1.2	Chrome	28462000
Vario	100	4	Rain, Massage spray, Shampoo spray, normal spray	22	1.2	Chrome	27441000
Multi	100	3	Rain, MonoRain, Massage spray	20	1.2	Chrome	27443000

Optional parts:		Finish	Code no.
	Shower arm 12.8 cm	Chrome	27411000

Measurements within scale drawings are in mm.
Technical specifications and units of measure are subject to change.

Crometta S Overhead showers 1jet

Features of all variants

- shower head size: 240 mm
- spray type: Rain
- minimum flow pressure: 1 bar
- ball-joint: overhead shower angle adjustable
- material spray disc: plastic
- installation: ceiling or wall
- connection thread: G ½
- connection dimension: DN15
- suitable for continous flow water heaters

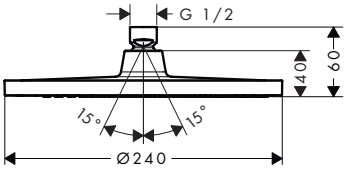

Sustainability

EcoSmart

Technologies

Quick Clean · XXL Performance

Spray types

Rain

Certificates/declarations

EPD

Overview variants

Shower head size	Number of sprays	Spray types	Max. flow rate at 3 bar (l/min)	Min. flow pressure (bar)	Finish	Code no.
240	1	Rain	6.5	1	Chrome	26724000
					Matt Black	26724670
240	1	Rain	16.7	1	Chrome	26723000
					Matt Black	26723670

Required parts (choose one):		Finish	Code no.
	Vernis Blend Shower arm 24 cm	Chrome	27809000
		Matt Black	27809670
	Vernis Blend Ceiling connector 10 cm	Chrome	27804000
		Matt Black	27804670
	Vernis Blend Ceiling connector 30 cm	Chrome	27805000
		Matt Black	27805670

Crometta S Overhead shower 240 1jet LowPressure

Features

- shower head size: 240 mm
- spray type: Rain
- flow rate at 0,2 bar: 7 l/min
- maximum flow rate at 3 bar: 21 l/min
- minimum flow pressure: 0.2 bar
- ball-joint: overhead shower angle adjustable
- material spray disc: plastic
- installation: ceiling or wall
- connection thread: G ½
- connection dimension: DN15
- suitable for continous flow water heaters

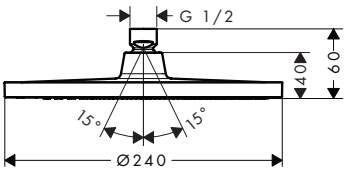

Technologies

Low Pressure · Quick Clean · XXL Performance

Spray types

Rain

Finish	Code no.
Chrome	26725000

Measurements within scale drawings are in mm.
Technical specifications and units of measure are subject to change.

Crometta S Overhead shower 240 1jet LowPressure

Required parts (choose one):	Finish	Code no.
Vernis Shape Shower arm 24 cm	Chrome	26405000
Vernis Shape Ceiling connector 10 cm	Chrome	26406000
Vernis Shape Ceiling connector 30 cm	Chrome	26407000

Crometta E Overhead showers 1jet

Features of all variants

- shower head size: 240 x 240 mm
- spray type: Rain
- minimum flow pressure: 1 bar
- ball-joint: overhead shower angle adjustable
- material spray disc: plastic
- installation: ceiling or wall
- connection thread: G ½
- connection dimension: DN15
- suitable for continous flow water heaters

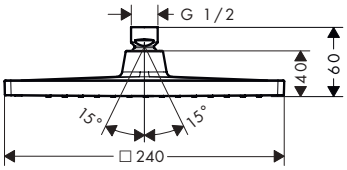

Sustainability

EcoSmart

Technologies

Quick Clean

XXL Performance

Spray types

Rain

Certificates/declarations

EPD

Overview variants

Shower head size	Number of sprays	Spray types	Max. flow rate at 3 bar (l/min)	Min. flow pressure (bar)	Finish	Code no.
240	1	Rain	6.5	1	Chrome	26727000
					Matt Black	26727670
240	1	Rain	15.9	1	Chrome	26726000
					Matt Black	26726670

Required parts (choose one):	Finish	Code no.
Vernis Shape Shower arm 24 cm	Chrome	26405000
	Matt Black	26405670
Vernis Shape Ceiling connector 10 cm	Chrome	26406000
	Matt Black	26406670
Vernis Shape Ceiling connector 30 cm	Chrome	26407000
	Matt Black	26407670

Measurements within scale drawings are in mm.
Technical specifications and units of measure are subject to change.

Crometta E Overhead shower 240 1jet LowPressure

Features

- shower head size: 240 x 240 mm
- spray type: Rain
- flow rate at 0,2 bar: 7 l/min
- maximum flow rate at 3 bar: 21 l/min
- minimum flow pressure: 0.2 bar
- ball-joint: overhead shower angle adjustable
- material spray disc: plastic
- installation: ceiling or wall
- connection thread: G ½
- connection dimension: DN15
- suitable for continous flow water heaters

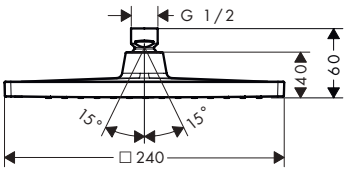

Technologies

Low Pressure · Quick Clean · XXL Performance

Spray types

Rain

Finish	Code no.
Chrome	26722000

Required parts (choose one):	Finish	Code no.
Vernis Shape Shower arm 24 cm	Chrome	26405000
Vernis Shape Ceiling connector 10 cm	Chrome	26406000
Vernis Shape Ceiling connector 30 cm	Chrome	26407000

Crometta 85 Overhead showers 3jet, 2jet, 1jet

Features of all variants

- shower head size: 85 mm
- ball-joint: overhead shower angle adjustable
- material spray disc: plastic
- spray disc surface: grey
- installation: ceiling or wall
- connection thread: G ½
- connection dimension: DN15
- suitable for continous flow water heaters

Multi

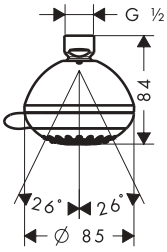

Vario

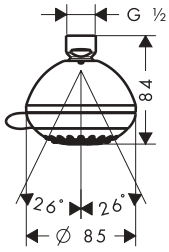

1jet

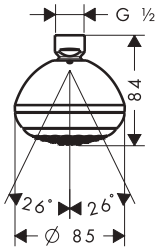

Sustainability

Eco Smart+

Technologies

Quick Clean

Spray types

Massage · Mono Rain · Normal

Certificates/declarations

EPD

Overview variants

Version	Shower head size	Number of sprays	Spray types	Max. flow rate at 3 bar (l/min)	Min. flow pressure (bar)	Finish	Code no.
Multi	85	3	MonoRain, normal spray, Massage spray	15	1	Chrome	28425000
Vario	85	2	normal spray, Vario spray	18	0.5	Chrome	28424000
1jet	85	1	normal spray	5.7	0.9	Chrome	28423000

Optional parts:	Finish	Code no.
Shower arm 12.8 cm	Chrome	27411000

Measurements within scale drawings are in mm.
Technical specifications and units of measure are subject to change.

Vernis Blend Overhead showers 1jet

Features of all variants

- shower head size: 205 mm
- spray type: Rain
- ball-joint: overhead shower angle adjustable
- material spray disc: plastic
- overhead shower removable for cleaning
- installation: ceiling or wall
- connection thread: G ½
- connection dimension: DN15
- suitable for continous flow water heaters

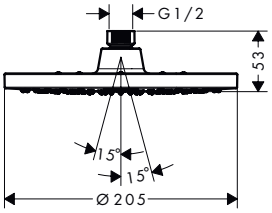

Sustainability

EcoSmart | Eco Smart+

Technologies

Quick Clean | XXL Performance

Spray types

Rain

Certificates/declarations

EPD

Overview variants

Shower head size	Number of sprays	Spray types	Max. flow rate at 3 bar (l/min)	Min. flow pressure (bar)	Finish	Code no.
200	1	Rain	5.4	0.6	Chrome	26093000
200	1	Rain	6.5	1	Chrome	26277000
					Matt Black	26277670
200	1	Rain	12.4	0.6	Chrome	26271000
					Matt Black	26271670

Required parts (choose one):	Finish	Code no.
Vernis Blend Ceiling connector 30 cm	Chrome	27805000
	Matt Black	27805670
Vernis Blend Ceiling connector 10 cm	Chrome	27804000
	Matt Black	27804670
Vernis Blend Shower arm 24 cm	Chrome	27809000
	Matt Black	27809670

Vernis Blend Overhead shower 200 1jet LowPressure

Features

- shower head size: 205 mm
- spray type: Rain
- flow rate at 0,2 bar: 2,8 l/min
- function from: 5,7 l/min
- minimum flow pressure: 0.2 bar
- ball-joint: overhead shower angle adjustable
- material spray disc: plastic
- overhead shower removable for cleaning
- installation: ceiling or wall
- connection thread: G ½
- connection dimension: DN15
- suitable for continous flow water heaters

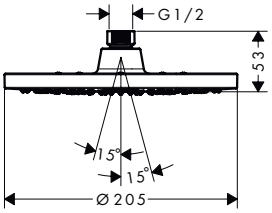

Technologies

Low Pressure | Quick Clean | XXL Performance

Spray types

Rain

Finish	Code no.
Chrome	26095000

For more information about this product, please see the next page.

Measurements within scale drawings are in mm.
Technical specifications and units of measure are subject to change.

Vernis Blend Overhead shower 200 1jet LowPressure

Optional parts:	Finish	Code no.
Vernis Blend Ceiling connector 10 cm	Chrome	27804000
Vernis Blend Shower arm 24 cm	Chrome	27809000
Vernis Blend Ceiling connector 30 cm	Chrome	27805000

Vernis Shape Overhead showers 1jet

Features of all variants

- shower head size: 230 x 170 mm
- spray type: Rain
- minimum flow pressure: 0,6 bar
- ball-joint: overhead shower angle adjustable
- material spray disc: plastic
- overhead shower removable for cleaning
- installation: ceiling or wall
- connection thread: G ½
- connection dimension: DN15
- suitable for continous flow water heaters

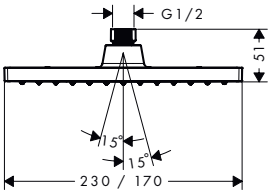

Sustainability

EcoSmart · Eco Smart+

Technologies

Quick Clean · XXL Performance

Spray types

Rain

Certificates/declarations

EPD

Overview variants

Shower head size	Number of sprays	Spray types	Max. flow rate at 3 bar (l/min)	Min. flow pressure (bar)	Finish	Code no.
230/170	1	Rain	5.4	0.6	Chrome	26094000
230/170	1	Rain	6.5	0.6	Chrome	26283000
					Matt Black	26283670
230/170	1	Rain	12.4	0.6	Chrome	26281000
					Matt Black	26281670

Required parts (choose one):	Finish	Code no.
Vernis Shape Shower arm 24 cm	Chrome	26405000
	Matt Black	26405670
Vernis Shape Ceiling connector 10 cm	Chrome	26406000
	Matt Black	26406670
Vernis Shape Ceiling connector 30 cm	Chrome	26407000
	Matt Black	26407670

Measurements within scale drawings are in mm.
Technical specifications and units of measure are subject to change.

Vernis Shape Overhead shower 230 1jet LowPressure

Features

- shower head size: 230 x 170 mm
- spray type: Rain
- flow rate Rain spray at 3 bar: 16,1 l/min
- flow rate at 0,2 bar: 2,8 l/min
- function from: 5,7 l/min
- maximum flow rate at 3 bar: 16,1 l/min
- minimum flow pressure: 0.2 bar
- ball-joint: overhead shower angle adjustable
- material spray disc: plastic
- overhead shower removable for cleaning
- installation: ceiling or wall
- connection thread: G ½
- connection dimension: DN15
- suitable for continous flow water heaters

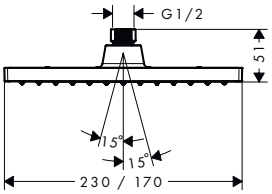

Technologies

Low Pressure · Quick Clean · XXL Performance

Spray types

Rain

Finish	Code no.
Chrome	26096000

Optional parts:	Finish	Code no.
Vernis Shape Shower arm 24 cm	Chrome	26405000
Vernis Shape Ceiling connector 10 cm	Chrome	26406000
Vernis Shape Ceiling connector 30 cm	Chrome	26407000

Clubmaster Overhead shower 85 3jet EcoSmart with shower arm

Features

- consists of: overhead shower, shower arm
- shower head size: 85 mm
- spray type: normal spray, Soft spray, Massage spray
- flow rate soft spray (at 3 bar): 9 l/min
- flow rate massage spray at 3 bar: 9 l/min
- flow rate normal spray at 3 bar: 9 l/min
- maximum flow rate at 3 bar: 9 l/min
- minimum flow pressure: 2 bar
- ball-joint: overhead shower angle adjustable
- material spray disc: plastic
- spray disc surface: grey
- shower arm length: 165 mm
- installation: wall
- connection thread: G ½
- connection dimension: DN15
- suitable for continous flow water heaters

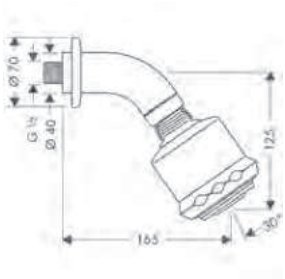

Sustainability

EcoSmart

Technologies

Quick Clean

Spray types

Massage · Normal

Finish	Code no.
Chrome	26606000

Measurements within scale drawings are in mm.
Technical specifications and units of measure are subject to change.

Clubmaster Overhead shower 90 3jet

Features

- shower head size: 93 mm
- spray type: Soft spray, normal spray, Massage spray
- flow rate soft spray (at 3 bar): 17 l/min
- flow rate massage spray at 3 bar: 12 l/min
- flow rate normal spray at 3 bar: 19 l/min
- maximum flow rate at 3 bar: 19 l/min
- minimum flow pressure: 2 bar
- adjustment with shift on overhead shower
- ball-joint: overhead shower angle adjustable
- material spray disc: plastic
- spray disc surface: grey
- installation: wall
- connection thread: G ½
- connection dimension: DN15
- suitable for continous flow water heaters

Technologies

Quick Clean

Spray types

Massage

Normal

Certificates/declarations

EPD

Finish	Code no.
Chrome	28496000

Optional parts:		Finish	Code no.
	Shower arm 12.8 cm	Chrome	27411000
	Shower arm 10 cm	Chrome	27438000

Measurements within scale drawings are in mm.
Technical specifications and units of measure are subject to change.

Shower arms E

Features of all variants

- length: 390 mm
- installation type: exposed installation
- connection type: G ½

rectangular shaft

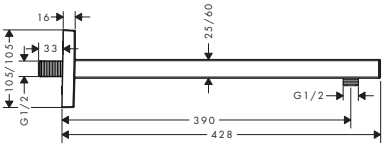

square shaft

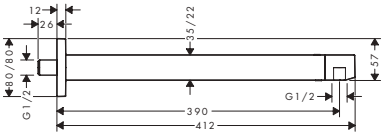

Overview variants

shaft	Length (mm)	Shape	Finish	Code no.
rectangular	390	square	Chrome	27694000
			Brushed Bronze	27694140
			Brushed Black Chrome	27694340
			Matt Black	27694670
			Matt White	27694700
			Polished Gold Optic	27694990
square	390	square	Chrome	24337000
			Brushed Bronze	24337140
			Matt Black	24337670
			Matt White	24337700

Pulsify Wall outlets

Features of all variants

- installation type: exposed installation
- connection type: G ½

for overhead shower 260

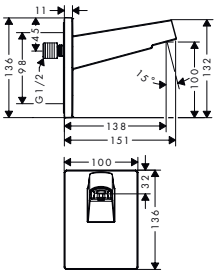

for overhead shower 105

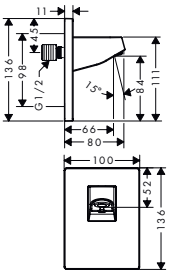

Overview variants

	Suitable for	Finish	Code no.
	overhead shower 260	Chrome	24149000
		Brushed Bronze	24149140
		Matt Black	24149670
		Matt White	24149700
	overhead shower 105	Chrome	24139000
		Brushed Bronze	24139140
		Matt Black	24139670
		Matt White	24139700

Measurements within scale drawings are in mm.
Technical specifications and units of measure are subject to change.

Shower arm S 39 cm

Features

- length: 390 mm
- installation type: exposed installation
- material: brass/ plastic
- connection type: G ½

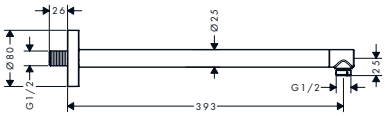

Finish	Code no.
Chrome	24357000
Brushed Bronze	24357140
Matt Black	24357670
Matt White	24357700

Shower arm 38.9 cm

Features

- length: 389 mm
- installation type: exposed installation
- material: brass
- version: 90° angle
- connection type: G ½

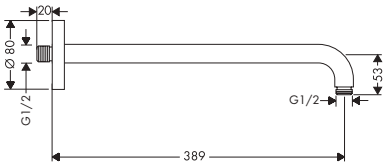

Finish	Code no.
Chrome	27413000
Brushed Bronze	27413140
Brushed Black Chrome	27413340
Matt Black	27413670
Matt White	27413700
Polished Gold Optic	27413990

Vernis Blend Shower arm 24 cm

Features

- length: 240 mm
- shaft Ø: 26 mm
- installation type: exposed installation
- material: brass
- version: 90° angle
- connection type: G ½

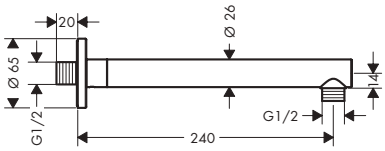

Finish	Code no.
Chrome	27809000
Matt Black	27809670

Shower arm 10 cm

Features

- length: 100 mm
- installation type: exposed installation
- material: brass
- connection type: G ½

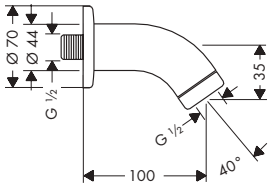

Finish	Code no.
Chrome	27438000

Measurements within scale drawings are in mm.
Technical specifications and units of measure are subject to change.

Shower arm 10 cm

Optional parts:		Finish	Code no.
	Clubmaster Overhead shower 90 3jet	Chrome	28496000

Shower arms Standard

Features of all variants

- installation type: exposed installation
- material: brass
- connection type: G ½

230 mm

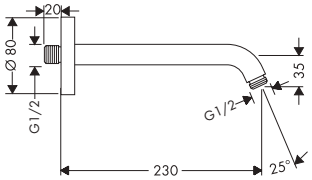

128 mm

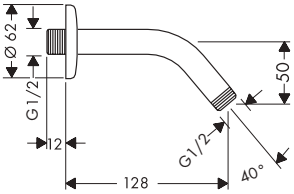

Overview variants

Length (mm)	Shape	Finish	Code no.
23	round	Chrome	27412000
		Brushed Bronze	27412140
		Brushed Gold Optic	27412250
		Polished Red Gold	27412300
		Brushed Red Gold	27412310
		Polished Black Chrome	27412330
		Brushed Black Chrome	27412340
		Stainless Steel Optic	27412800
		Brushed Nickel	27412820
		Brushed Brass	27412950
128	round	Chrome	27411000

Shower arm E 38.9 cm

Features

- length: 389 mm
- installation type: exposed installation
- material: brass
- version: 90° angle
- connection type: G ½

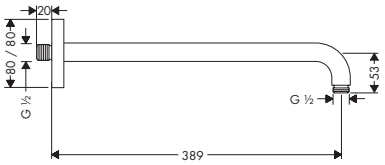

Finish	Code no.
Chrome	27446000

Measurements within scale drawings are in mm.
Technical specifications and units of measure are subject to change.

Vernis Shape Shower arm 24 cm

Features

- length: 240 mm
- shaft Ø: 26 mm
- installation type: exposed installation
- material: brass
- version: 90° angle
- connection type: G ½

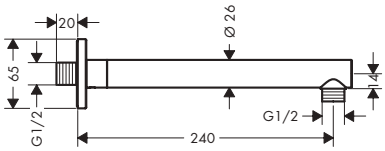

Finish	Code no.
Chrome	26405000
Matt Black	26405670

Ceiling connectors E

Features of all variants

- installation type: concealed installation
- material: brass/ plastic
- connection type: G ½
- ceiling connector not extendable, ceiling connector not shortenable

300 mm

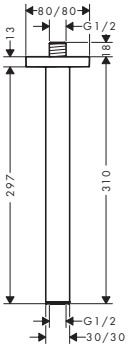

100 mm

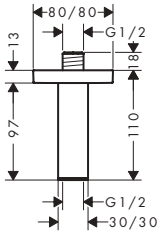

Overview variants

Length (mm)	Shape	Finish	Code no.
300	square	Chrome	24339000
		Brushed Bronze	24339140
		Matt Black	24339670
		Matt White	24339700
100	square	Chrome	24338000
		Brushed Bronze	24338140
		Matt Black	24338670
		Matt White	24338700

Measurements within scale drawings are in mm.
Technical specifications and units of measure are subject to change.

Ceiling connectors S

Features of all variants

- shaft Ø: 27 mm
- installation type: exposed installation
- material: brass
- connection type: G ½

300 mm

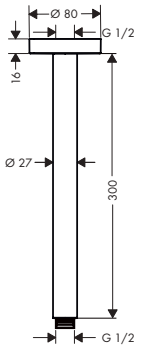

100 mm

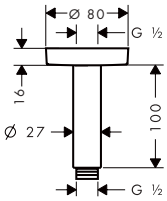

Overview variants

Length (mm)	Shape	Finish	Code no.
300	round	Chrome	27389000
		Brushed Bronze	27389140
		Brushed Black Chrome	27389340
		Matt Black	27389670
		Matt White	27389700
		Polished Gold Optic	27389990
100	round	Chrome	27393000
		Brushed Bronze	27393140
		Brushed Black Chrome	27393340
		Matt Black	27393670
		Matt White	27393700
		Polished Gold Optic	27393990

Vernis Blend Ceiling connectors

Features of all variants

- shaft Ø: 26 mm
- installation type: exposed installation
- material: brass
- connection type: G ½

300 mm

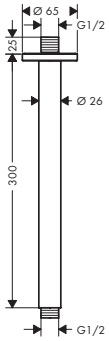

100 mm

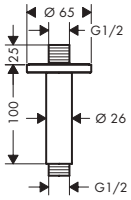

Overview variants

Length (mm)	Shape	Finish	Code no.
300	round	Chrome	27805000
		Matt Black	27805670

For more information about this product, please see the next page.

Measurements within scale drawings are in mm.
Technical specifications and units of measure are subject to change.

Vernis Blend Ceiling connectors

Overview variants

Length (mm)	Shape	Finish	Code no.
100	round	Chrome	27804000
		Matt Black	27804670

Ceiling connectors Q

Features of all variants

- shaft Ø: 27 mm
- installation type: exposed installation
- material: brass
- connection type: G ½

300 mm

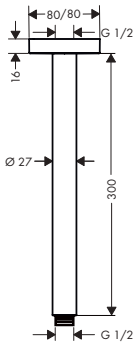

100 mm

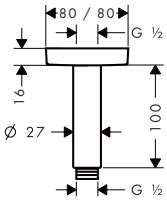

Overview variants

Length (mm)	Shape	Finish	Code no.
300	square	Chrome	27388000
100	square	Chrome	27467000

Vernis Shape Ceiling connectors

Features of all variants

- shaft Ø: 26 mm
- installation type: exposed installation
- material: brass
- connection type: G ½

300 mm

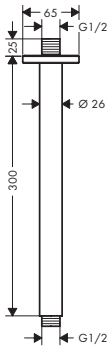

100 mm

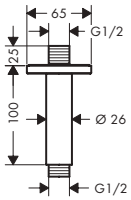

Overview variants

Length (mm)	Shape	Finish	Code no.
300	square	Chrome	26407000
		Matt Black	26407670
100	square	Chrome	26406000
		Matt Black	26406670

Measurements within scale drawings are in mm.
Technical specifications and units of measure are subject to change.

Rainfinity Shoulder shower 500 1jet with shower shelf

Features

- shower head size: 502 x 80 mm
- spray type: PowderRain
- spray area: 309 x 28 mm
- field of application: functions as overhead, shoulder or side shower
- maximum flow rate at 3 bar: 14,5 l/min
- flow rate PowderRain spray at 3 bar: 14,5 l/min
- minimum flow pressure: 1,1 bar
- operating pressure: min. 1,1 bar/max. 10 bar
- connection thread: G ½
- connection dimension: DN15
- material: metal
- shelf made of safety glass
- surface shelf: graphite

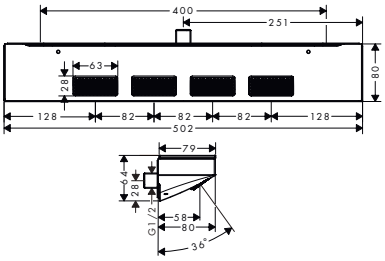

Technologies

Quick Clean
XXL Performance

Spray types

Powder Rain

Certificates/declarations

EPD

Finish	Code no.
Chrome	26243000
Brushed Bronze	26243140
Brushed Black Chrome	26243340
Matt Black	26243670
Matt White	26243700
Polished Gold Optic	26243990

26243000 Surface shelf: mirror glass.

Bodyvette Body showers 1jet

Features of all variants

- shower head size: 60 mm
- spray type: Rain
- spray disc surface: grey
- side shower angle adjustable
- maximum flow rate at 3 bar: 5 l/min
- flow rate Rain spray at 3 bar: 5 l/min
- minimum flow pressure: 1,4 bar
- operating pressure: min. 0.14 MPa/max. 0.6 MPa
- connection thread: G ½
- suitable for continous flow water heaters
- connection dimension: DN15
- material: metal
- EU taxonomy: max. 6 l/min - Substantial Contribution (SC) possible

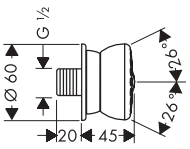

Sustainability

Eco Smart+

Technologies

Quick Clean

Spray types

Rain

Overview variants

Shower head size	Special	Number of sprays	Spray types	Max. flow rate at 3 bar (l/min)	Min. flow pressure (bar)	Finish	Code no.
60	without water stop	1	Rain	5	1.4	Chrome	28466000
60	with water stop	1	Rain	5	1.4	Chrome	28467000

Measurements within scale drawings are in mm.
Technical specifications and units of measure are subject to change.

Raindance Select S Shower system 240 2jet with thermostat ShowerSelect S and basic set

Features

- consists of: overhead shower, hand shower, shower thermostat, basic set, shower arm, shower holder, wall outlet, shower hose
- shower head size: 240 mm
- spray type overhead shower: RainAir, Rain
- spray type hand shower: RainAir, Rain, Whirl
- maximum flow rate at 3 bar: 17 l/min
- max. operating pressure: 6 bar
- pivot connector prevents hose from tangling
- use of outlets: simultaneous use of several outlets

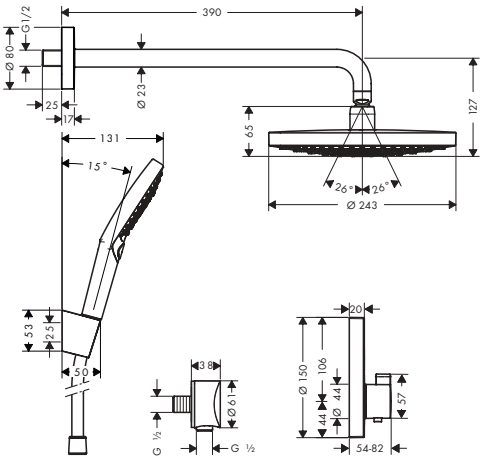

Technologies

Spray types

Finish	Code no.
Chrome	27297000

Measurements within scale drawings are in mm.
Technical specifications and units of measure are subject to change.

Raindance S Shower systems 1jet with thermostat

Features of all variants

- shower head size: 240 mm
- spray type overhead shower: PowderRain
- maximum flow rate at 3 bar: 18,1 l/min
- max. operating pressure: 6 bar
- nuts shower hose: shower hose with conical nut on both ends
- pivot connector prevents hose from tangling
- connection type: basic set
- use of outlets: simultaneous use of several outlets

wall connection with shower holder

wall connection and shower holder

Technologies

Spray types

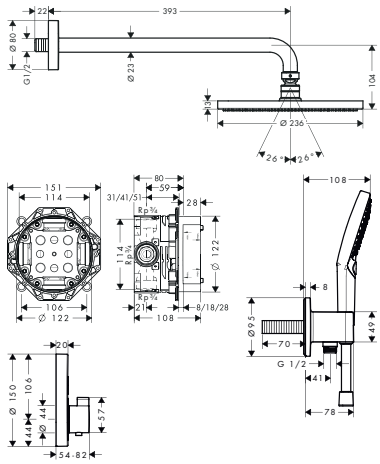

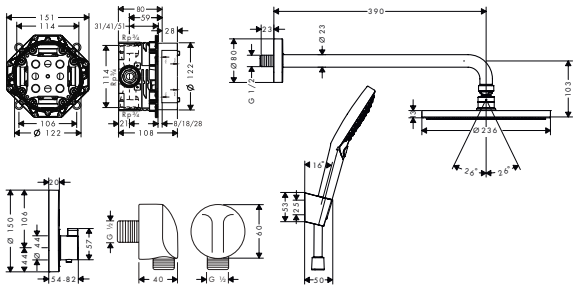

Overview variants

Special	Spray types	Spray types hand shower	Max. flow rate at 3 bar (l/min)	Min. flow pressure (bar)	Finish	Code no.
wall connection with shower holder	PowderRain	PowderRain, Rain, Whirl	18.1	1	Chrome	27951000
wall connection and shower holder	PowderRain	RainAir, Rain, Whirl	18.1	1.5	Matt Black	27959670

Measurements within scale drawings are in mm.
Technical specifications and units of measure are subject to change.

Raindance E Shower systems 1jet with thermostat

Features of all variants

- shower head size: 300 x 300 mm
- spray type overhead shower: RainAir
- max. operating pressure: 6 bar
- thermostat: ShowerSelect
- pivot connector prevents hose from tangling
- connection type: basic set
- use of outlets: simultaneous use of several outlets

wall connection with shower holder

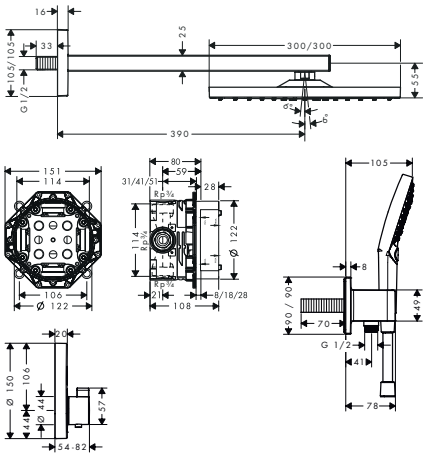

wall connection and shower holder

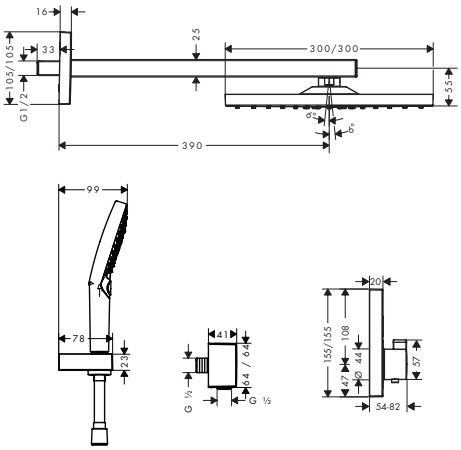

Technologies

Spray types

Overview variants

Special	Spray types	Spray types hand shower	Max. flow rate at 3 bar (l/min)	Min. flow pressure (bar)	Finish	Code no.
wall connection with shower holder	RainAir	PowderRain, Rain, Whirl	17.1	1.5	Chrome	27952000
wall connection and shower holder	RainAir	Rain, RainAir, Whirl	17	1.6	Matt Black	27939670

Measurements within scale drawings are in mm.
Technical specifications and units of measure are subject to change.

Croma Select S Shower system 180 2jet with thermostat Ecostat S and basic set

Features

- consists of: overhead shower, hand shower, shower thermostat, basic set, shower arm, shower holder, wall outlet, shower hose
- shower head size: 187 mm
- spray type overhead shower: Rain, IntenseRain
- spray type hand shower: Rain
- maximum flow rate at 3 bar: 17 l/min
- max. operating pressure: 6 bar
- thermostat: Ecostat S
- pivot connector prevents hose from tangling
- connection type: basic set

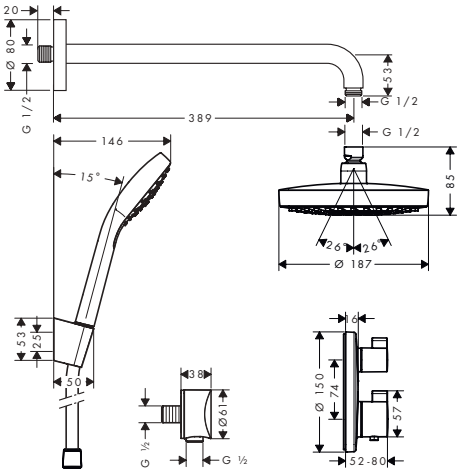

Technologies

Spray types

Finish	Code no.
Chrome	27295000

Croma Select E Shower system 180 2jet with thermostat Ecostat E and basic set

Features

- consists of: overhead shower, hand shower, shower thermostat, basic set, shower arm, shower holder, wall outlet, shower hose
- shower head size: 187 x 187 mm
- spray type overhead shower: Rain, IntenseRain
- spray type hand shower: Rain
- maximum flow rate at 3 bar: 17 l/min
- max. operating pressure: 6 bar
- thermostat: Ecostat E
- pivot connector prevents hose from tangling

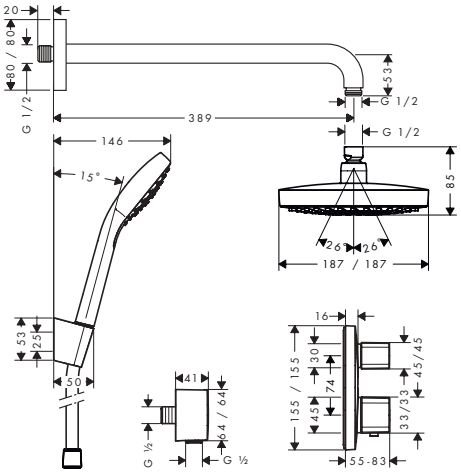

Technologies

Spray types

Finish	Code no.
Chrome	27294000

Measurements within scale drawings are in mm.
Technical specifications and units of measure are subject to change.

Croma E Shower system 280 1jet with thermostat Ecostat E and basic set

Features

- consists of: overhead shower, hand shower, shower arm, Thermostat, basic set, wall outlet, shower hose
- shower head size: 280 x 170 mm
- spray type overhead shower: RainAir
- spray type hand shower: Rain, IntenseRain, TurboRain
- maximum flow rate at 3 bar: 18,3 l/min
- minimum flow pressure: 1 bar
- max. operating pressure: 6 bar
- nuts shower hose: shower hose with conical nut on both ends
- pivot connector prevents hose from tangling

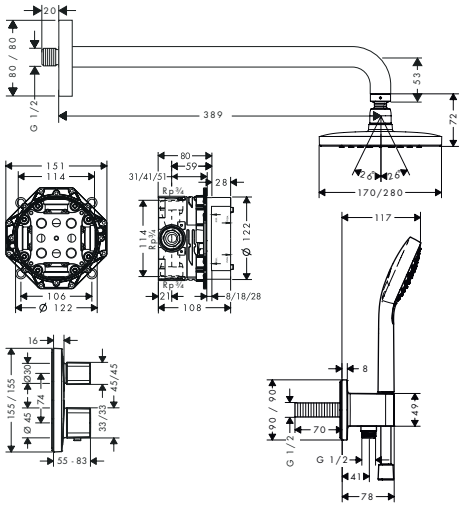

Technologies

Spray types

Finish	Code no.
Chrome	27953000

Measurements within scale drawings are in mm.
Technical specifications and units of measure are subject to change.

Croma Shower systems 1jet with thermostat

Features of all variants

- shower head size: 280 mm
- spray type overhead shower: RainAir
- maximum flow rate at 3 bar: 15,6 l/min
- minimum flow pressure: 1,5 bar
- max. operating pressure: 6 bar
- pivot connector prevents hose from tangling
- connection type: basic set

wall connection and shower holder

wall connection with shower holder

Technologies

Spray types

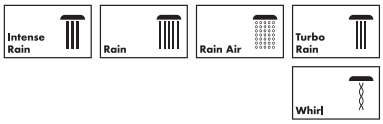

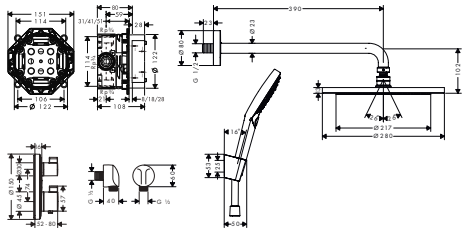

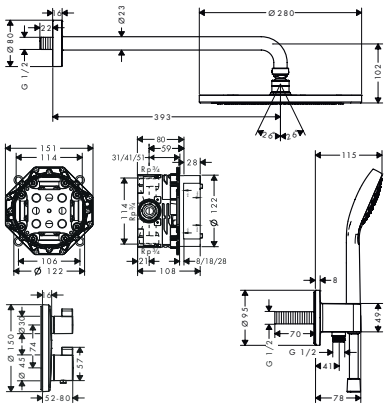

Overview variants

Special	Shower head size	Spray types	Max. flow rate at 3 bar (l/min)	Min. flow pressure (bar)	Hand shower	Spray types hand shower	Finish	Code no.
wall connection and shower holder	280	RainAir	15.6	1.5	120 3jet	RainAir, Rain, Whirl	Matt Black	27961670
wall connection with shower holder	280	RainAir	15.6	1.5	110 Vario	Rain, IntenseRain, TurboRain	Chrome	27954000

Measurements within scale drawings are in mm.
Technical specifications and units of measure are subject to change.

Crometta S Shower system 240 1jet with single lever mixer and basic set

Features

- consists of: overhead shower, hand shower, shower arm, Single lever bath mixer, basic set, wall outlet, shower holder, shower hose
- shower head size: 240 mm
- spray type overhead shower: Rain
- spray type hand shower: Rain, IntenseRain
- maximum flow rate at 3 bar: 16,7 l/min
- minimum flow pressure: 1 bar
- max. operating pressure: 6 bar
- nuts shower hose: shower hose with conical nut on both ends
- pivot connector prevents hose from tangling
- flow rate Rain spray at 3 bar: 16,7 l/min

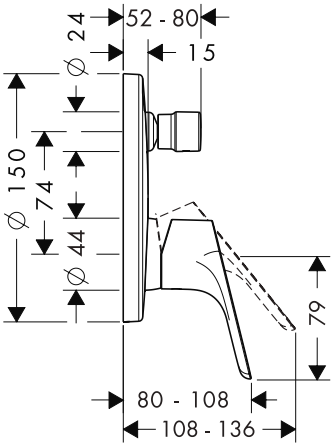

Technologies

Spray types

Finish	Code no.
Chrome	27958000

Measurements within scale drawings are in mm.
Technical specifications and units of measure are subject to change.

Showerpipes and shower panels

Showerpipes and shower panels

	Rainfinity	Raindance Select S	Raindance S	Raindance Select E	Raindance E
Finish					
Shower head size	250/360	240/300	240/300	300	360
Flowrate	8.2/15.9	15/16	9 - 20	8.5 - 19	9 - 20
EcoSmart+	–	–	–	–	–
EcoSmart	■	–	■	■	■
CoolContact	■	–	–	■	■
QuickClean	■	■	■	■	■
Bath spout	–	–	■	–	■
Single lever mixer	–	–	–	–	–
Reno	–	–	–	–	–
Pipe can be shortened in height	–	■	■	–	–
Number of sprays	1	1/2	1	2/3	1
PowderRain	■	■	–	–	–
Rain	–	■	–	■	–
RainAir	–	■	■	■	■
from page	223	224	225	227	228

	Croma Select S		Croma Select E	Croma E	Croma
Finish					
Shower head size	280	110	110	280	220
Flowrate	9 - 19	16	16	8.5 - 20.3	9 - 22
EcoSmart+	–	–	–	–	–
EcoSmart	■	–	–	■	■
CoolContact	–	–	–	■	–
QuickClean	■	■	■	■	■
Bath spout	■	–	–	■	■
Single lever mixer	■	–	–	–	■
Reno	■	–	–	–	■
Pipe can be shortened in height	■	■	■	■	■
Number of sprays	1	3	3	1	1
PowderRain	–	–	–	–	–
Rain	–	–	–	–	–
RainAir	■	–	–	■	■
from page	238	242	243	244	246

■ available depending on the model
– not available

	Raindance E	Pulsify S		Pulsify S Puro	
Finish					
Shower head size	300	260	260	260	260
Flowrate	9/16	7.5/13.3	7.5 - 21.8	8/11.2	8/11.2
EcoSmart+	–	–	–	–	–
EcoSmart	■	■	■	■	■
CoolContact	■	■	■	–	–
QuickClean	■	■	■	■	■
Bath spout	–	–	■	–	–
Single lever mixer	–	–	–	–	–
Reno	–	–	–	–	–
Pipe can be shortened in height	–	■	■	■	■
Number of sprays	1	2	1	1	1
PowderRain	–	■	■	■	■
Rain	–	–	–	–	–
RainAir	■	–	–	–	–
from page	231	232	233	235	236

	Crometta S	Crometta E	Vernis Blend	Vernis Shape	Raindance
Finish					
Shower head size	240	240	200/240	230, 230/170, 240/240	180
Flowrate	6.7 - 20.5	6.7 - 19.5	5.7 - 20	5.7 - 20	22
EcoSmart+	–	–	■	■	–
EcoSmart	■	■	■	■	–
CoolContact	–	–	–	–	–
QuickClean	■	■	■	■	■
Bath spout	■	■	■	■	–
Single lever mixer	■	■	–	–	–
Reno	■	■	■	■	–
Pipe can be shortened in height	■	■	–	–	–
Number of sprays	1	1	1	1	2
PowderRain	–	–	–	–	–
Rain	■	■	■	■	–
RainAir	–	–	–	–	■
from page	250	254	258	261	264

Sustainability

EcoSmart+

With a consumption of up to 60% less water than our conventional models, this shower is particularly efficient and economical, reducing water and energy costs every day and conserving valuable resources.

Water flow control

The amount of water can be precisely adjusted via a control dial on the water-saving thermostat control, enabling you to use less water every day. Ideal also for children, who usually prefer gentle flow of water anyway.

EcoSmart

This shower head uses up to 40% less water than our conventional showers. In this way, it reduces water and energy costs every day and conserves valuable resources. For long-lasting soothing showering pleasure.

Technologies

Fast Drain

An efficient and convenient way to empty the shower head and significantly reduce dripping after showering. So that nobody and no shower surface gets unintentionally caught in the rain once dry.

CoolContact

This thermostatic mixer is fitted with innovative cooling technology to prevent it from getting too hot, keeping it nice and cool to the touch. For care-free showering with no need to keep a safe distance or fear scalding.

Select

The Select push button simplifies daily bathroom routines, as one simple push is all it takes for water to flow or stop. When showering, the user-friendly button can change the spray type or switch from the overhead to the hand shower.

Technologies

PushSlider

Smooth and ergonomic: This shower support can be used to conveniently adjust the height of the hand shower on the shower rail. Simply press the button and smoothly slide the support. It's so easy, it can be done with one hand.

QuickClean

Who actually likes cleaning? Limescale deposits and dirt disappear in an instant with this technology. Simply rub the flexible silicone discs or nozzles with a finger. It's fast and keeps cleaning to a minimum.

Rotatable Bath Spout

For lovers of minimalist and safe bathroom solutions: The water inlet on the thermostatic bath mixer can be swivelled by 90° to keep it out of sight under the tap. For a clean look and more elbow room when enjoying a bath or shower.

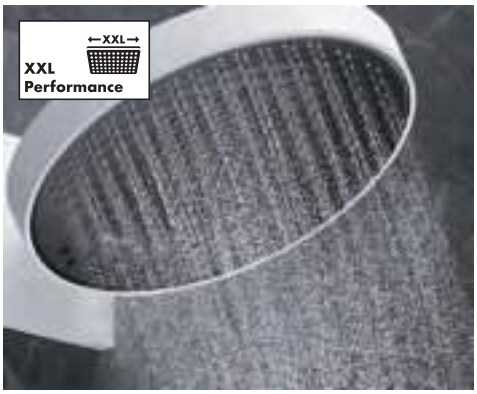

XXL Performance

XXL showering indulgence that envelops the complete body in real-life dreams of water using wonderfully soothing spray types from hand showers and overhead showers with diameters of 100 to 600 mm.

AirPower

Mixes generous quantities of air into the water to create light, pearl-like droplets that caress the skin. The shower feels luxurious, even though little water is consumed. The spray causes less splash, reducing the time to clean the shower area.

Spray types

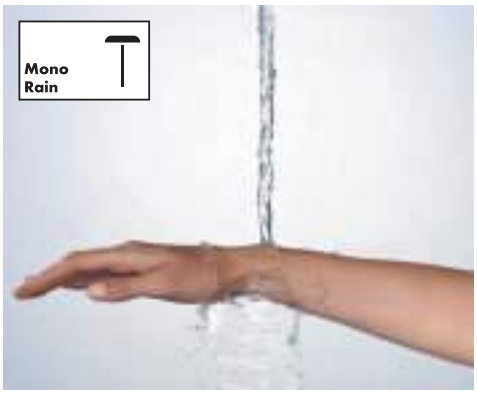

MonoRain

Focused and extremly gentle spray for feel-good wellness. The focused spray type is perfect for hydrotherapeutic showering and cold water treatments. For anyone who loves winding down in their shower or bath tub.

Normal

Versatile shower spray day in, day out. The shower rain pampers with full, light, rich droplets. The full water spray is great for washing hair and rinsing out shampoo.

PowderRain

Relaxing, micro-fine droplets that gently and quietly envelop the body. The water is transformed into a delicate cocoon that sensually embraces the body. For sensual showering and indulgent, deep relaxation.

Rain

Invigorating and energising everyday showering indulgence with a satisfyingly full shower rain. With its small outlets on the shower head, this spray type works efficiently to thoroughly rinse out shampoo.

RainAir

Gentle droplets enriched with air from the luxurious shower rain feel silky soft on the skin for an indulgent shower. Additionally, this spray type is efficient and thorough enough to rinse out shampoo.

RainFlow

Powerful water stream that bathes the entire body and feels like a waterfall for wonderful relaxation. The stylish spray feels natural as it is poured over the neck and shoulders. It pampers and is like a waterfall in the bathroom.

Spray types

RainStream

Lavish downpour with soft sprays that invigorate the body, mind and soul. The extraordinary spray consists of individual pearl-like droplets and is an intense, energising shower for people of all ages.

Shampoo

Intense water spray that rinses out shampoo in no time at all. And not only that: The highly efficient spray invigorates the body and mind in the mornings or after exercise. For wellness all year round.

SoftRain

Caressing water sprays that gently swirl around the body. An act of kindness for the skin, mind and soul. A perfectly smooth way to wake up in the morning, recover after exercise or wash off the stresses of a challenging day.

Whirl

Rotating water sprays to pleasantly shower away everyday tensions. Individual sprays of water flow around each other in a helical pattern, helping to relieve tension with their gentle massaging action.

Intense PowderRain

Intense spray consisting of micro-fine droplets. The number of droplets is much higher for an extremely effective way to rinse out shampoo. The water feels velvety soft and ultra-lightweight on the skin, with very little splashback.

IntenseRain

Stimulating water sprays that wash away tiredness and immediately make the person feel nice and awake. The perfect and quick way to feel fit for the day ahead. The powerful spray also effortlessly rinses shampoo out of hair.

Spray types

Massage

An invigorating spray that soothes and causes everyday stresses to flow down the drain. The water sprays are concentrated to ease tense spots. For an indulgent and relaxing spa-like shower, every single day.

Finish

Brushed Black Chrome
-340

Brushed Bronze
-140

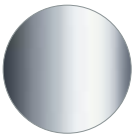

Chrome
-000

Matt Black
-670

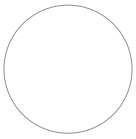

Matt White
-700

Polished Gold Optic
-990

White/ Chrome
-400

Rainfinity Showerpipes 1jet with thermostat

Features of all variants

- consists of: overhead shower, hand shower, shower thermostat, shower hose, slider, shower bar
- spray type overhead shower: PowderRain
- spray disc surface: graphite
- spray type hand shower: PowderRain, Intense PowderRain, MonoRain
- max. operating pressure: 10 bar
- ball-joint: overhead shower angle adjustable
- CoolContact thermostat: Prevents the housing from heating up, making showering even safer
- thermostat ShowerTablet 350
- safety stop at 40 °C
- adjustable hot water limitation
- outlets controlled via turning handle
- will not run two functions at same time
- suitable for continuous flow water heaters
- mounting type: exposed installation
- connection dimension: DN15
- connection thread: G ½
- centre distance: 150 ± 12 mm
- intrinsically safe against backflow
- bar width: 61 mm
- 2 functions
- material front of thermostat and pipe: safety glass

360

250

Sustainability

EcoSmart

Technologies

Cool Contact · Select · Quick Clean · XXL Performance

Spray types

Intense Powder Rain · Mono Rain · Powder Rain

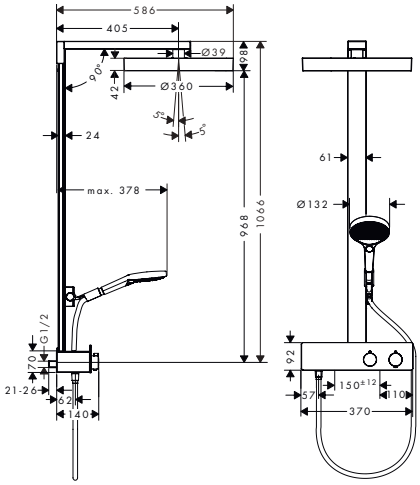

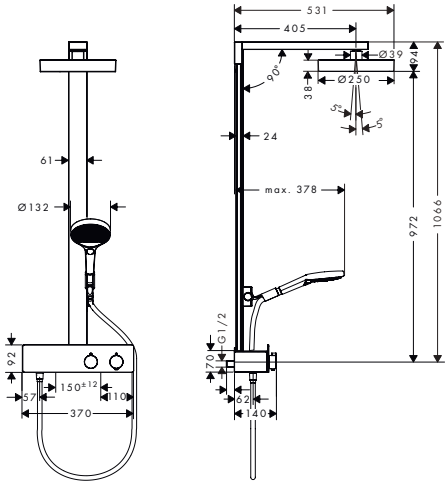

Overview variants

Shower head size	Number of sprays	Spray types	Max. flow rate at 3 bar (l/min)	Min. flow pressure (bar)	Finish	Code no.
360	1	PowderRain	15.9	2	Chrome	26853000
					Matt Black	26853670
					Matt White	26853700
250	1	PowderRain	8.2	1	Chrome	28742000
					Matt Black	28742670
					Matt White	28742700

Measurements within scale drawings are in mm.
Technical specifications and units of measure are subject to change.

Raindance Select S Showerpipes 2jet, 1jet with thermostat

Features of all variants

- consists of: overhead shower, hand shower, shower thermostat, shower hose, slider, shower bar
- minimum flow pressure: 1,5 bar
- max. operating pressure: 10 bar
- height-adjustable hand shower holder
- swivel shower arm
- thermostat Ecostat Comfort
- safety stop at 40 °C
- adjustable hot water limitation
- outlets controlled via turning handle
- suitable for continuous flow water heaters
- mounting type: exposed installation
- connection dimension: DN15
- connection thread: G ½
- centre distance: 150 ± 12 mm
- pipe can be shortened in height
- intrinsically safe against backflow
- 2 functions

300

240

240 PowderRain

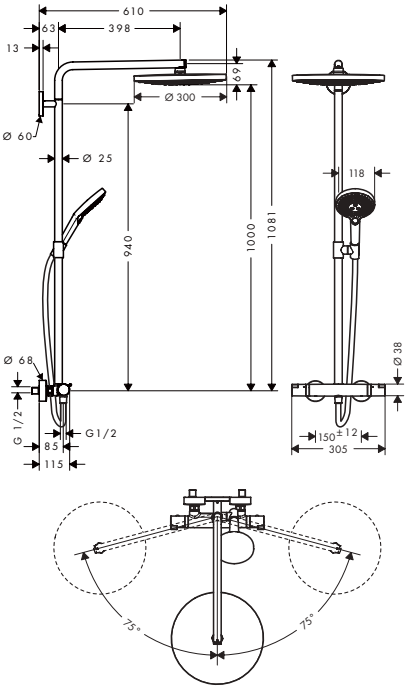

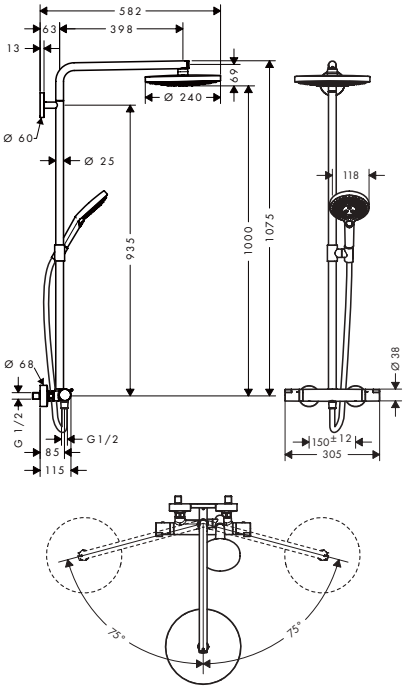

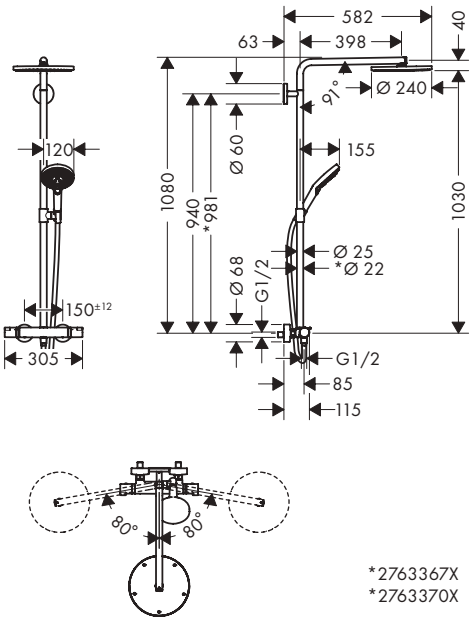

*2763367X
*2763370X

Technologies

Select | AirPower | Quick Clean | XXL Performance

Spray types

Powder Rain | Rain | Rain Air | Whirl

Certificates/declarations

EPD

Measurements within scale drawings are in mm.
Technical specifications and units of measure are subject to change.

Raindance Select S Showerpipes 2jet, 1jet with thermostat

Overview variants

Shower head size	Number of sprays	Spray types overhead shower	Spray types hand shower	Max. flow rate at 3 bar (l/min)	Min. flow pressure (bar)	Finish	Code no.
300	2	RainAir, Rain	RainAir, Rain, Whirl	15	1.5	Chrome	27133000
240	2	RainAir, Rain	RainAir, Rain, Whirl	15	1.5	Chrome	27129000
240	1	PowderRain	PowderRain, Rain, Whirl	16	1.5	Chrome	27633000
						Brushed Bronze	27633140
						Brushed Black Chrome	27633340
						Matt Black	27633670
						Matt White	27633700
						Polished Gold Optic	27633990

Optional parts:	For	Finish	Code no.
Wall bar spacer for Croma 100 Showerpipe		Chrome	95239000
Wall bar spacer	27633XXX	Chrome	98681000

Raindance S Showerpipes 1jet with thermostat

Features of all variants

- consists of: overhead shower, hand shower, shower thermostat, shower hose, slider, shower bar
- spray type overhead shower: RainAir
- spray type hand shower: RainAir, Rain, Whirl
- max. operating pressure: 10 bar
- height-adjustable hand shower holder
- swivel shower arm
- thermostat Ecostat Comfort
- safety stop at 40 °C
- adjustable hot water limitation
- outlets controlled via turning handle
- suitable for continuous flow water heaters
- mounting type: exposed installation
- connection dimension: DN15
- connection thread: G ½
- centre distance: 150 ± 12 mm
- pipe can be shortened in height
- intrinsically safe against backflow
- 2 functions

300

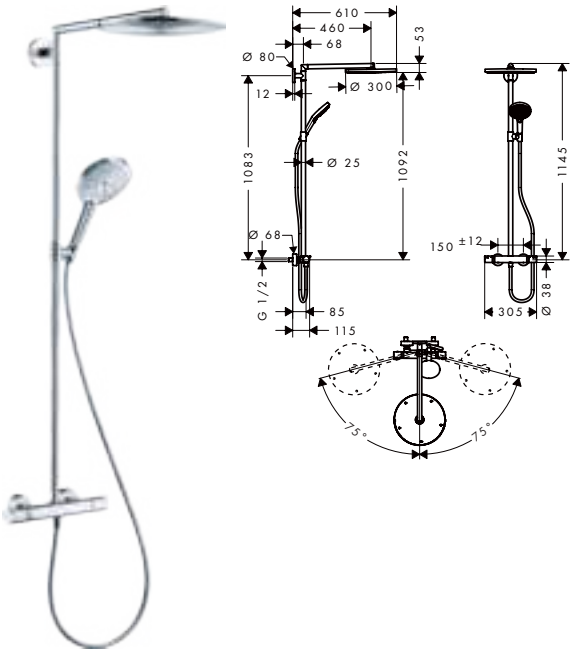

240

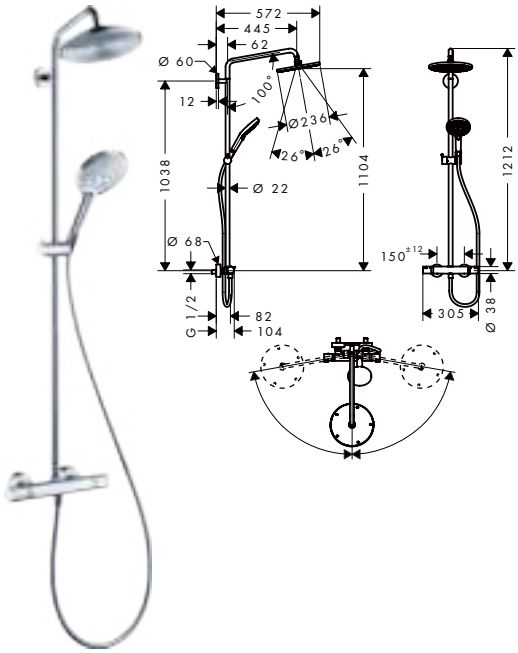

Sustainability

EcoSmart

Technologies

Select, AirPower, Quick Clean, XXL Performance

Spray types

Rain, Rain Air, Whirl

Certificates/declarations

EPD

For more information about this product, please see the next page.

Measurements within scale drawings are in mm.
Technical specifications and units of measure are subject to change.

Raindance S Showerpipes 1jet with thermostat

Overview variants

Shower head size	Number of sprays	Spray types	Max. flow rate at 3 bar (l/min)	Min. flow pressure (bar)	Finish	Code no.
300	1	RainAir	16	2	Chrome	27114000
240	1	RainAir	9	2	Chrome	27116000
240	1	RainAir	16	1	Chrome	27115000

Optional parts:	For	Finish	Code no.
Wall bar spacer	27114XXX	Chrome	98681000
Wall bar spacer for Croma 100 Showerpipe	27116XXX 27115XXX	Chrome	95239000

Raindance S Showerpipe 240 1jet with bath thermostat

Features

- consists of: overhead shower, hand shower, bath thermostat, shower hose, shower bar, slider
- overhead shower Raindance S 240 Air
- shower head size overhead shower: 236 mm
- spray type overhead shower: RainAir
- spray disc surface: chrome
- flow rate RainAir spray at 3 bar: 17 l/min
- flow rate bath filler: 20 l/min
- spray type hand shower: Rain, RainAir, Whirl
- flow rate of hand shower at 3 bar: 15,5 l/min
- maximum flow rate for Showerpipe at 3 bar: 20 l/min
- minimum flow pressure: 1 bar
- max. operating pressure: 10 bar
- ball-joint: overhead shower angle adjustable
- height-adjustable hand shower holder
- shower arm length overhead shower: 460 mm
- swivel shower arm
- thermostat Ecostat Comfort
- safety stop at 40 °C
- adjustable hot water limitation
- outlets controlled via turning handle
- suitable for continuous flow water heaters
- mounting type: exposed installation
- connection dimension: DN15
- connection thread: G ½
- centre distance: 150 ± 12 mm
- pipe can be shortened in height
- intrinsically safe against backflow
- shower bar diameter: 22 mm
- 3 functions

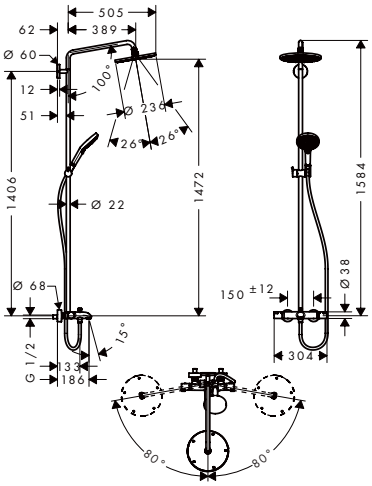

Technologies

Spray types

Finish	Code no.
Chrome	27117000

Optional parts:	Finish	Code no.
Wall bar spacer for Croma 100 Showerpipe	Chrome	95239000

Measurements within scale drawings are in mm.
Technical specifications and units of measure are subject to change.

Raindance Select E Showerpipes 3jet, 2jet with thermostat

Features of all variants

- convenient spray selection via Select button
- spray disc surface: chrome
- shelf made of safety glass
- surface shelf: mirror glass
- spray type hand shower: RainAir, Rain, Whirl
- max. operating pressure: 10 bar
- shower arm length overhead shower: 380 mm
- CoolContact thermostat: Prevents the housing from heating up, making showering even safer
- thermostat ShowerTablet Select 300
- safety stop at 40 °C
- adjustable hot water limitation
- convenient diversion via Select button
- suitable for continuous flow water heaters
- mounting type: exposed installation
- connection dimension: DN15
- connection thread: G ½
- centre distance: 150 ± 12 mm
- intrinsically safe against backflow
- bar width: 40 mm
- in case of installation on existing G ¾ connections, adaptor no.02026000 must be used
- 2 functions

3 spray types

2 spray types

Sustainability

EcoSmart

Technologies

Cool Contact · Select · AirPower · Quick Clean · XXL Performance

Spray types

Rain · Rain Air · Rain Stream · Whirl

Certificates/declarations

EPD

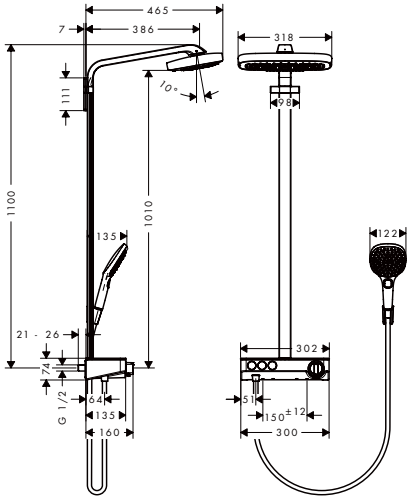

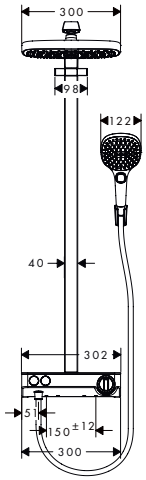

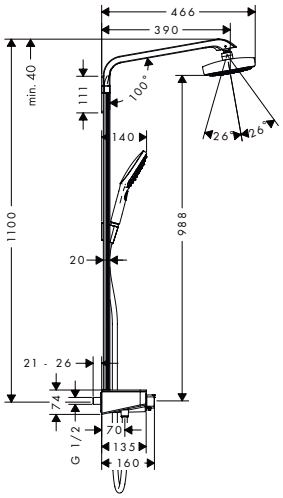

Overview variants

Shower head size	Thermostat	Number of sprays	Spray types	Max. flow rate at 3 bar (l/min)	Min. flow pressure (bar)	Select	Finish	Code no.
300	ShowerTablet Select 300	3	RainAir, Rain, RainStream	19	2	■	Chrome	27127000
							White/Chrome	27127400
300	ShowerTablet Select 300	2	RainAir, Rain	8.5	2	■	Chrome	27283000
300	ShowerTablet Select 300	2	RainAir, Rain	16	1.5	■	Chrome	27126000
							White/Chrome	27126400

27126400
27127400 — Spray disc surface: white.

27126400
27127400 — Surface shelf: white glass.

Optional parts:		Finish	Code no.
	S-connections adapter G ¾ for renovation	Chrome	02026000

Measurements within scale drawings are in mm.
Technical specifications and units of measure are subject to change.

Raindance E Showerpipes 1jet with thermostat

Features of all variants

- consists of: overhead shower, hand shower, shower thermostat, shower hose, shower holder, shower bar
- overhead shower Raindance E 360 Air
- shower head size overhead shower: 360 x 190 mm
- spray type overhead shower: RainAir
- shelf made of safety glass
- surface shelf: mirror glass
- spray type hand shower: RainAir, Rain, Whirl
- minimum flow pressure: 1 bar
- max. operating pressure: 10 bar
- ball-joint: overhead shower angle adjustable
- shower arm length overhead shower: 380 mm
- thermostat Ecostat Select
- safety stop at 40 °C
- adjustable hot water limitation
- outlets controlled via turning handle
- suitable for continuous flow water heaters
- mounting type: exposed installation
- connection dimension: DN15
- connection thread: G ½
- centre distance: 150 ± 12 mm
- intrinsically safe against backflow
- pipe length: 1066 mm
- bar width: 44 mm
- in case of installation on existing G ¾ connections, adaptor no.02026000 must be used
- 2 functions

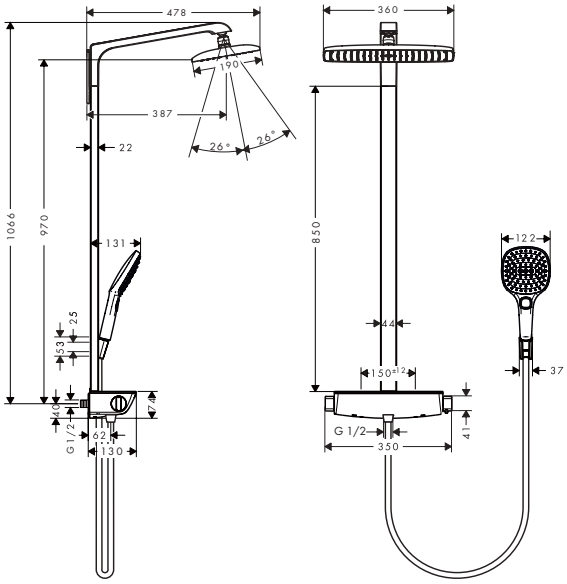

Sustainability

EcoSmart

Technologies

Cool Contact · Select · AirPower · Quick Clean · XXL Performance

Spray types

Rain · Rain Air · Whirl

Certificates/declarations

EPD

Overview variants

Shower head size	Number of sprays	Spray types	Max. flow rate at 3 bar (l/min)	Min. flow pressure (bar)	Finish	Code no.
360	1	RainAir	9	1	Chrome	27286000
					White/Chrome	27286400
360	1	RainAir	15	1	Chrome	27112000
					White/Chrome	27112400

27112400
27286400 — Surface shelf: white glass.

Optional parts:		Finish	Code no.
	S-connections adapter G ¾ for renovation	Chrome	02026000
	Wall bar spacer for Raindance Select	Chrome	95960000

Measurements within scale drawings are in mm.
Technical specifications and units of measure are subject to change.

Raindance E Showerpipe 360 1jet with bath thermostat

Features

- consists of: overhead shower, hand shower, bath thermostat, shower hose, shower holder
- overhead shower Raindance E 360 Air
- shower head size overhead shower: 360 x 190 mm
- spray type overhead shower: RainAir
- shelf made of safety glass
- surface shelf: mirror glass
- flow rate RainAir spray at 3 bar: 15 l/min
- spray type hand shower: RainAir, Rain, Whirl
- maximum flow rate for Showerpipe at 3 bar: 20 l/min
- minimum flow pressure: 1,3 bar
- max. operating pressure: 10 bar
- ball-joint: overhead shower angle adjustable
- shower arm length overhead shower: 380 mm
- CoolContact thermostat: Prevents the housing from heating up, making showering even safer
- thermostat Ecostat Select
- safety stop at 40 °C
- adjustable hot water limitation
- outlets controlled via turning handle
- suitable for continuous flow water heaters
- mounting type: exposed installation
- connection dimension: DN15
- connection thread: G ½
- centre distance: 150 ± 12 mm
- intrinsically safe against backflow
- pipe length: 1400 mm
- bar width: 44 mm
- in case of installation on existing G ¾ connections, adaptor no.02026000 must be used
- 3 functions

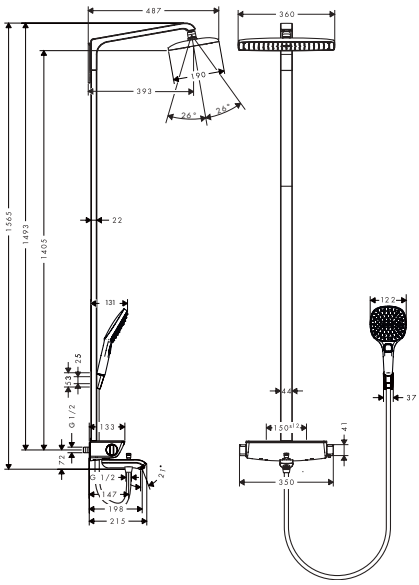

Technologies

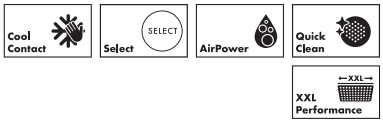

Spray types

Finish	Code no.
Chrome	27113000
White/Chrome	27113400

27113400 Surface shelf: white glass.

Optional parts:		Finish	Code no.
	Wall bar spacer for Raindance Select	Chrome	95960000
	S-connections adapter G ¾ for renovation	Chrome	02026000

Measurements within scale drawings are in mm.
Technical specifications and units of measure are subject to change.

Raindance E Showerpipe 360 1jet with ShowerTablet Select 300

Features

- consists of: overhead shower, hand shower, shower thermostat, shower hose, shower holder, shower bar
- overhead shower Raindance E 360 Air
- shower head size overhead shower: 360 x 190 mm
- spray type overhead shower: RainAir
- shelf made of safety glass
- surface shelf: mirror glass
- spray type hand shower: RainAir, Rain, Whirl
- maximum flow rate for Showerpipe at 3 bar: 16,9 l/min
- minimum flow pressure: 0,8 bar
- max. operating pressure: 5 bar
- ball-joint: overhead shower angle adjustable
- shower arm length overhead shower: 380 mm
- CoolContact thermostat: Prevents the housing from heating up, making showering even safer
- thermostat ShowerTablet Select 300
- safety stop at 40 °C
- adjustable hot water limitation
- convenient diversion via Select button
- suitable for continuous flow water heaters
- mounting type: exposed installation
- connection dimension: DN15
- connection thread: G ½
- centre distance: 150 ± 12 mm
- intrinsically safe against backflow
- bar width: 40 mm
- in case of installation on existing G ¾ connections, adaptor no.02026000 must be used
- 2 functions

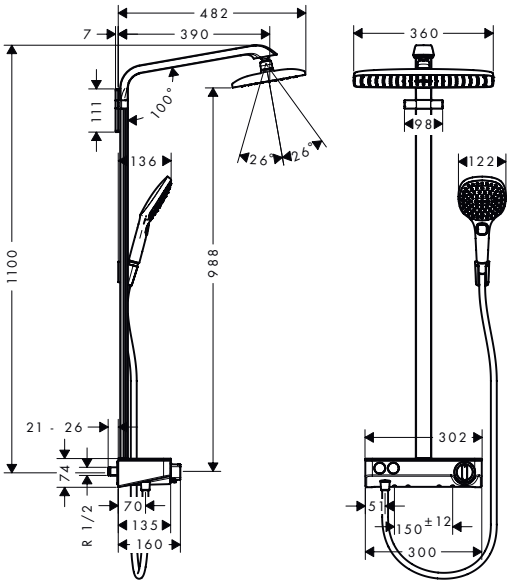

Technologies

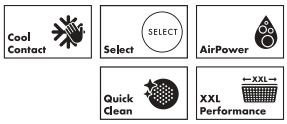

Spray types

Certificates/declarations

EPD

Finish	Code no.
Chrome	27288000
White/Chrome	27288400

27288400 Surface shelf: white glass.

Optional parts:		Finish	Code no.
	S-connections adapter G ¾ for renovation	Chrome	02026000

Measurements within scale drawings are in mm.
Technical specifications and units of measure are subject to change.

Raindance E Showerpipes 1jet with thermostat

Features of all variants

- overhead shower Raindance E 300 Air 1jet
- shower head size overhead shower: 300 x 300 mm
- spray type overhead shower: RainAir
- surface shelf: aluminium anodized
- spray type hand shower: RainAir, Rain, Whirl
- minimum flow pressure: 1,5 bar
- max. operating pressure: 10 bar
- 90° position adjustable hand shower holder, pivots left and right, up and down
- shower arm length overhead shower: 405 mm
- CoolContact thermostat: Prevents the housing from heating up, making showering even safer
- thermostat ShowerTablet 350
- safety stop at 40°C
- adjustable hot water limitation
- outlets controlled via turning handle
- will not run two functions at same time
- suitable for continuous flow water heaters
- mounting type: exposed installation
- connection dimension: DN15
- connection thread: G ½
- centre distance: 150 ± 12 mm
- intrinsically safe against backflow
- pipe length: 1000 mm
- bar width: 61 mm
- 2 functions

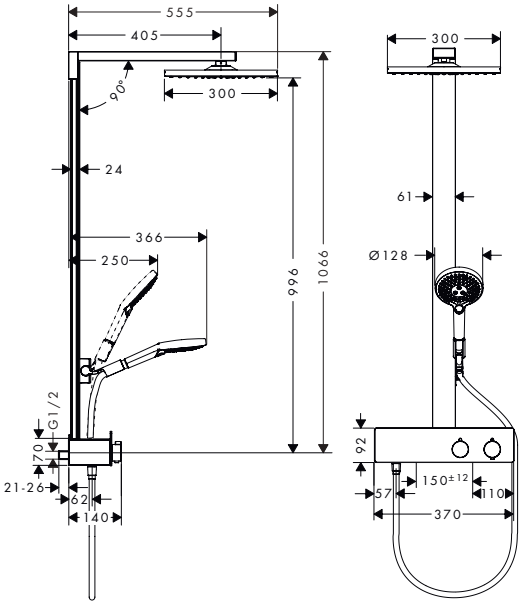

Sustainability

EcoSmart

Technologies

Cool Contact · Select · AirPower · Quick Clean · XXL Performance

Spray types

Rain · Rain Air · Whirl

Certificates/declarations

EPD

Overview variants

Shower head size	Thermostat	Number of sprays	Spray types	Max. flow rate at 3 bar (l/min)	Min. flow pressure (bar)	Select	Finish	Code no.
300	ShowerTablet 350	1	RainAir	9	1.5	■	Chrome	27362000
							Matt Black	27362670
							Matt White	27362700
300	ShowerTablet 350	1	RainAir	16	1.5	■	Chrome	27361000
							Matt Black	27361670
							Matt White	27361700

Optional parts:	For	Finish	Code no.
Casetta Soap dish/ shelf E	27361XXX	Chrome	26511000

Measurements within scale drawings are in mm.
Technical specifications and units of measure are subject to change.

Pulsify S Showerpipes 2jet with thermostat

Features of all variants

- consists of: overhead shower, hand shower, shower thermostat, shower bar, shower hose
- overhead shower Pulsify 260 2jet
- shower head size overhead shower: 260 mm
- spray type overhead shower: PowderRain, Intense PowderRain
- spray disc surface: graphite
- Fast Drain empties the overhead shower from an angle of 10°
- removable shower head
- shelf made of plastic
- surface shelf: graphite
- spray type hand shower: PowderRain, IntenseRain, Massage spray
- max. operating pressure: 10 bar
- ball-joint: overhead shower inclinable by 13-39°
- shower arm length overhead shower: 233 mm
- CoolContact thermostat: Prevents the housing from heating up, making showering even safer
- thermostat ShowerTablet Select 400
- safety stop at 40°C
- suitable for continuous flow water heaters
- mounting type: exposed installation
- connection thread: G ½
- centre distance: 150 ± 12 mm
- pipe can be shortened in height
- intrinsically safe against backflow
- bar width: 48 mm
- Thermostat is delivered with buttons hand shower, PowderRain, Intense PowderRain
- water flow control with stop function
- 2 functions

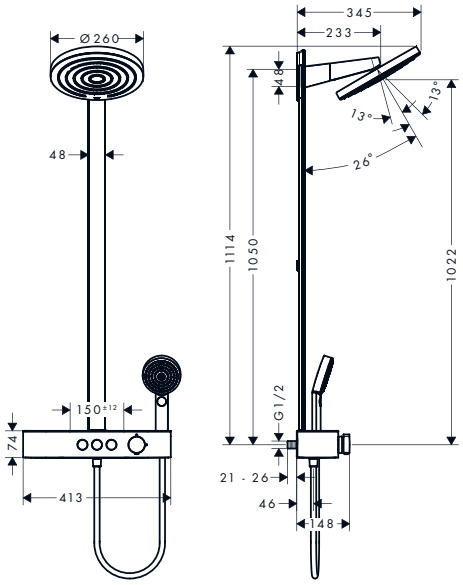

Sustainability

Technologies

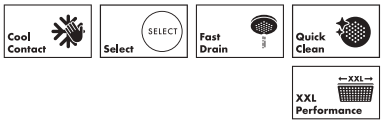

Spray types

Overview variants

Shower head size	Number of sprays	Spray types	Max. flow rate at 3 bar (l/min)	Min. flow pressure (bar)	Finish	Code no.
260	2	PowderRain, Intense PowderRain	7.5	1.7	Chrome	24241000
					Brushed Bronze	24241140
					Matt Black	24241670
					Matt White	24241700
260	2	PowderRain, Intense PowderRain	13.3	1.3	Chrome	24240000
					Brushed Bronze	24240140
					Matt Black	24240670
					Matt White	24240700

Optional parts:		Finish	Code no.
	S-connections adapter G ¾ for renovation	Chrome	02026000

Measurements within scale drawings are in mm.
Technical specifications and units of measure are subject to change.

Pulsify S Showerpipes 1jet with thermostat

Features of all variants

- consists of: overhead shower, hand shower, shower thermostat, shower bar, slider, shower hose
- overhead shower Pulsify 260 1jet
- shower head size overhead shower: 260 mm
- spray type overhead shower: PowderRain
- spray disc surface: graphite
- Fast Drain empties the overhead shower from an angle of 10°
- removable shower head
- shelf made of plastic
- surface shelf: graphite
- spray type hand shower: PowderRain, IntenseRain, Massage spray
- max. operating pressure: 10 bar
- ball-joint: overhead shower angle adjustable
- height-adjustable slider with locking push-button slider
- slider rotatable on the pipe for left or right operation
- shower arm length overhead shower: 398 mm
- swivel shower arm
- CoolContact thermostat: Prevents the housing from heating up, making showering even safer
- thermostat ShowerTablet Select 400
- safety stop at 40°C
- adjustable hot water limitation
- convenient diversion via Select button
- simultaneous utilization of 2 functions
- suitable for continuous flow water heaters
- mounting type: exposed installation
- connection thread: G ½
- centre distance: 150 ± 12 mm
- pipe can be shortened in height
- intrinsically safe against backflow
- shower bar diameter: 22 mm
- Thermostat is delivered with buttons hand shower and overhead shower
- water flow control with stop function
- 2 functions

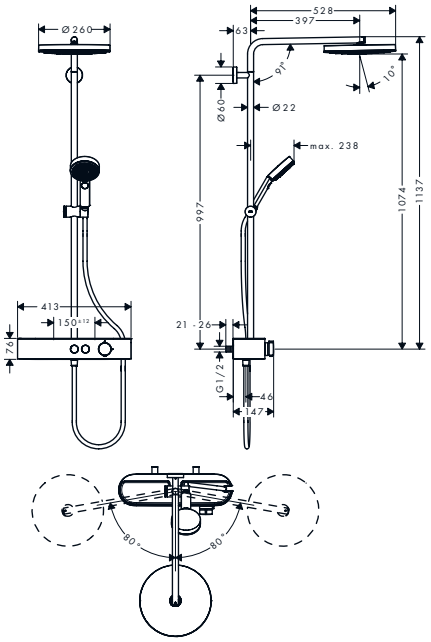

Sustainability

Technologies

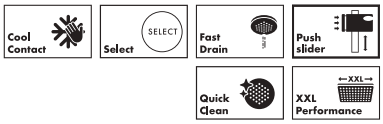

Spray types

Overview variants

Shower head size	Number of sprays	Spray types	Max. flow rate at 3 bar (l/min)	Min. flow pressure (bar)	Finish	Code no.
260	1	PowderRain	7.5	0.9	Chrome	24221000
					Brushed Bronze	24221140
					Matt Black	24221670
					Matt White	24221700
260	1	PowderRain	10.9	1.2	Chrome	24220000
					Brushed Bronze	24220140
					Matt Black	24220670
					Matt White	24220700

Optional parts:		Finish	Code no.
	S-connections adapter G ¾ for renovation	Chrome	02026000
	Wall bar spacer for Croma 100 Showerpipe	Chrome	95239000

Measurements within scale drawings are in mm.
Technical specifications and units of measure are subject to change.

Pulsify S Showerpipe 260 1jet with bath thermostat ShowerTablet 400

Features

- consists of: overhead shower, hand shower, bath thermostat, shower bar, slider, shower hose
- overhead shower Pulsify 260 1jet
- shower head size overhead shower: 260 mm
- spray type overhead shower: PowderRain
- spray disc surface: graphite
- Fast Drain empties the overhead shower from an angle of 10°
- removable shower head
- shelf made of plastic
- surface shelf: graphite
- flow rate PowderRain spray at 3 bar: 11,5 l/min
- spray type hand shower: PowderRain, IntenseRain, Massage spray
- maximum flow rate for Showerpipe at 3 bar: 21,8 l/min
- max. operating pressure: 5 bar
- ball-joint: overhead shower angle adjustable
- height-adjustable slider with locking push-button slider
- slider rotatable on the pipe for left or right operation
- shower arm length overhead shower: 398 mm
- swivel shower arm
- CoolContact thermostat: Prevents the housing from heating up, making showering even safer
- thermostat ShowerTablet Select 400
- safety stop at 40°C
- adjustable hot water limitation
- convenient diversion via Select button
- simultaneous utilization of 3 functions
- suitable for continuous flow water heaters
- mounting type: exposed installation
- connection thread: G ½
- centre distance: 150 ± 12 mm
- pipe can be shortened in height
- intrinsically safe against backflow
- shower bar diameter: 22 mm
- Thermostat is delivered with buttons overhead shower, bath tub and hand shower
- water flow control with stop function
- 3 functions

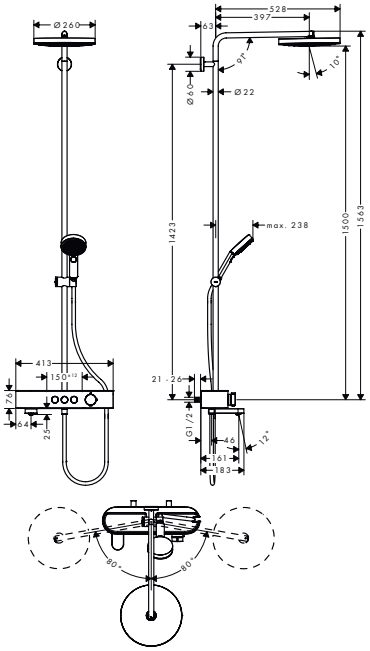

Sustainability

Technologies

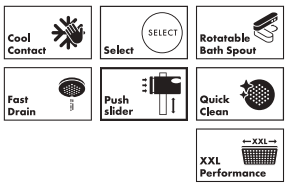

Spray types

Finish	Code no.
Chrome	24230000

Optional parts:		Finish	Code no.
	S-connections adapter G ¾ for renovation	Chrome	02026000

Measurements within scale drawings are in mm.
Technical specifications and units of measure are subject to change.

Pulsify S Puro Showerpipes 1jet with thermostat

Features of all variants

- consists of: overhead shower, hand shower, shower thermostat, shower bar, slider, shower hose
- overhead shower Pulsify 260 1jet
- shower head size overhead shower: 260 mm
- spray type overhead shower: PowderRain
- spray disc surface: graphite
- Fast Drain empties the overhead shower from an angle of 10°
- removable shower head
- spray type hand shower: PowderRain
- max. operating pressure: 10 bar
- ball-joint: overhead shower angle adjustable
- height-adjustable slider with locking push-button slider
- slider rotatable on the pipe for left or right operation
- shower arm length overhead shower: 460 mm
- swivel shower arm
- thermostat Ecostat Fine
- safety stop at 40°C
- adjustable hot water limitation
- outlets controlled via turning handle
- will not run two functions at same time
- suitable for continuous flow water heaters
- mounting type: exposed installation
- connection dimension: DN15
- connection thread: G ½
- centre distance: 150 ± 12 mm
- pipe can be shortened in height
- intrinsically safe against backflow
- pipe length: 1119 mm
- shower bar diameter: 22 mm
- 2 functions

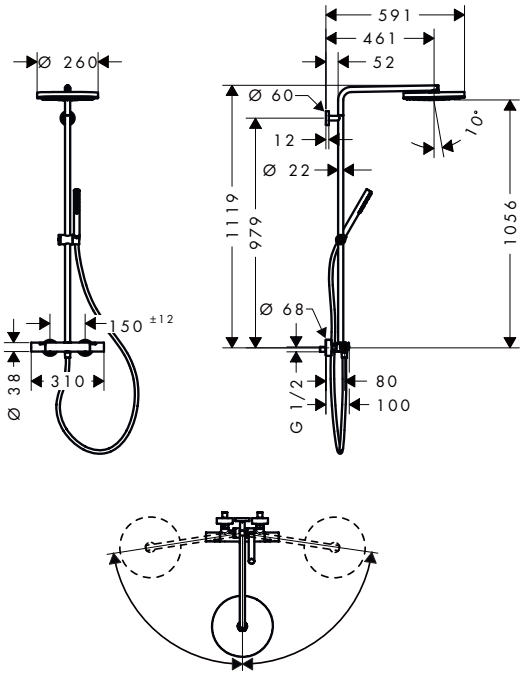

Sustainability

EcoSmart · Water Flow Control

Technologies

Fast Drain · Push slider · Quick Clean · XXL Performance

Spray types

Powder Rain

Overview variants

Shower head size	Number of sprays	Spray types	Max. flow rate at 3 bar (l/min)	Finish	Code no.
260	1	PowderRain	8	Chrome	24223000
				Brushed Bronze	24223140
				Matt Black	24223670
				Matt White	24223700
260	1	PowderRain	11.2	Chrome	24222000
				Brushed Bronze	24222140
				Matt Black	24222670
				Matt White	24222700

Optional parts:	Finish	Code no.
Wall bar spacer for Croma 100 Showerpipe	Chrome	95239000

Measurements within scale drawings are in mm.
Technical specifications and units of measure are subject to change.

Pulsify S Puro Showerpipes 1jet with thermostat

Features of all variants

- consists of: overhead shower, hand shower, shower thermostat, shower bar, slider, shower hose
- overhead shower Pulsify 260 1jet
- shower head size overhead shower: 260 mm
- spray type overhead shower: PowderRain
- spray disc surface: graphite
- Fast Drain empties the overhead shower from an angle of 10°
- removable shower head
- spray type hand shower: PowderRain, IntenseRain, Massage spray
- max. operating pressure: 10 bar
- ball-joint: overhead shower angle adjustable
- height-adjustable slider with locking push-button slider
- slider rotatable on the pipe for left or right operation
- shower arm length overhead shower: 460 mm
- swivel shower arm
- thermostat Ecostat Fine
- safety stop at 40 °C
- adjustable hot water limitation
- outlets controlled via turning handle
- will not run two functions at same time
- suitable for continuous flow water heaters
- mounting type: exposed installation
- connection dimension: DN15
- connection thread: G ½
- centre distance: 150 ± 12 mm
- pipe can be shortened in height
- intrinsically safe against backflow
- pipe length: 1119 mm
- shower bar diameter: 22 mm
- 2 functions

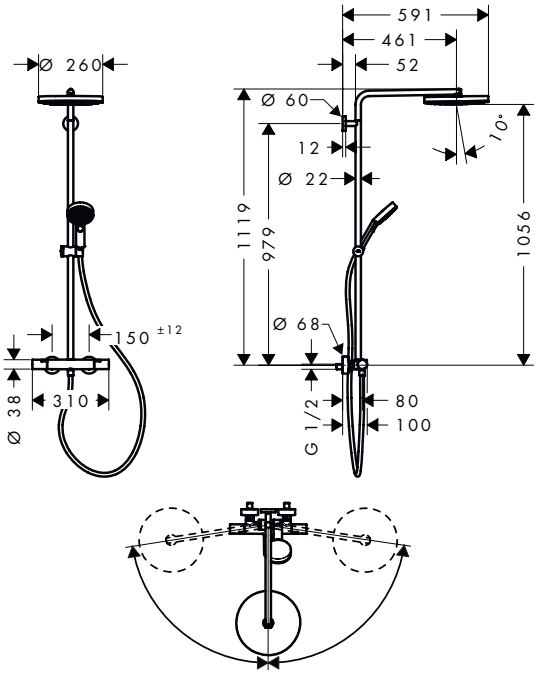

Sustainability

EcoSmart · Water Flow Control

Technologies

Fast Drain · Push slider · Quick Clean · XXL Performance

Spray types

Intense Rain · Massage · Powder Rain

Overview variants

Shower head size	Number of sprays	Spray types overhead shower	Spray types hand shower	Max. flow rate at 3 bar (l/min)	Finish	Code no.
260	1	PowderRain	PowderRain, IntenseRain, Massage spray	8	Chrome	24237000
					Brushed Bronze	24237140
					Matt Black	24237670
					Matt White	24237700
260	1	PowderRain	PowderRain, IntenseRain, Massage spray	11.2	Chrome	24236000
					Brushed Bronze	24236140
					Matt Black	24236670
					Matt White	24236700

Optional parts:	Finish	Code no.
Wall bar spacer for Croma 100 Showerpipe	Chrome	95239000

Measurements within scale drawings are in mm.
Technical specifications and units of measure are subject to change.

Pulsify S Puro Showerpipe 260 1jet EcoSmart with bath thermostat Ecostat Fine and hand shower 3jet

Features

- consists of: overhead shower, hand shower, bath thermostat, shower bar, slider, shower hose
- overhead shower Pulsify 260 1jet
- shower head size overhead shower: 260 mm
- spray type overhead shower: PowderRain
- spray disc surface: graphite
- Fast Drain empties the overhead shower from an angle of 10°
- removable shower head
- surface shelf: graphite
- flow rate PowderRain spray at 3 bar: 7,9 l/min
- spray type hand shower: PowderRain, IntenseRain, Massage spray
- flow rate of hand shower at 3 bar: 6,5 l/min
- maximum flow rate for Showerpipe at 3 bar: 18,9 l/min
- max. operating pressure: 10 bar
- ball-joint: overhead shower angle adjustable
- height-adjustable slider with locking push-button slider
- slider rotatable on the pipe for left or right operation
- shower arm length overhead shower: 460 mm
- swivel shower arm
- thermostat Ecostat Fine
- safety stop at 40°C
- adjustable hot water limitation
- outlets controlled via turning handle
- will not run two functions at same time
- suitable for continuous flow water heaters
- mounting type: exposed installation
- connection dimension: DN15
- connection thread: G ½
- centre distance: 150 ± 12 mm
- pipe can be shortened in height
- intrinsically safe against backflow
- pipe length: 1546 mm
- shower bar diameter: 22 mm
- 3 functions

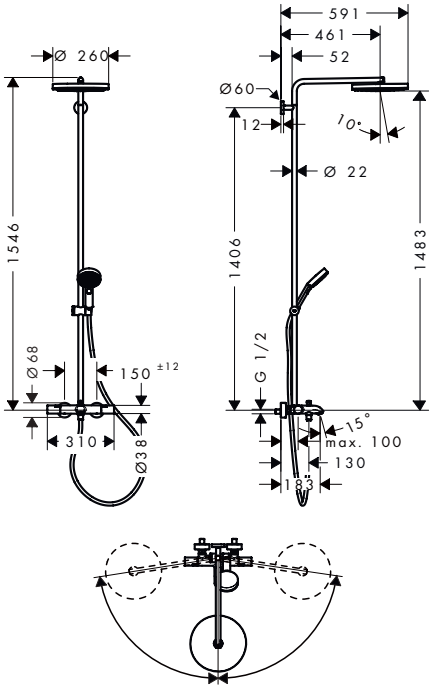

Sustainability

Technologies

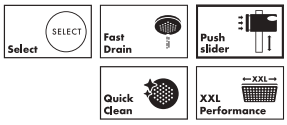

Spray types

Finish	Code no.
Chrome	24232000

Optional parts:	Finish	Code no.
Wall bar spacer for Croma 100 Showerpipe	Chrome	95239000

Measurements within scale drawings are in mm.
Technical specifications and units of measure are subject to change.

Croma Select S Showerpipes 1jet with thermostat

Features of all variants

- consists of: overhead shower, hand shower, shower thermostat, shower hose, slider, shower bar
- overhead shower Croma 280
- shower head size overhead shower: 280 mm
- spray type overhead shower: RainAir
- max. operating pressure: 10 bar
- ball-joint: overhead shower angle adjustable
- height-adjustable hand shower holder
- shower arm length overhead shower: 400 mm
- swivel shower arm
- thermostat Ecostat Comfort
- safety stop at 40 °C
- adjustable hot water limitation
- outlets controlled via turning handle
- suitable for continuous flow water heaters
- mounting type: exposed installation
- connection dimension: DN15
- connection thread: G ½
- centre distance: 150 ± 12 mm
- pipe can be shortened in height
- intrinsically safe against backflow
- shower bar diameter: 22 mm
- 2 functions

280 with hand shower 110 Multi

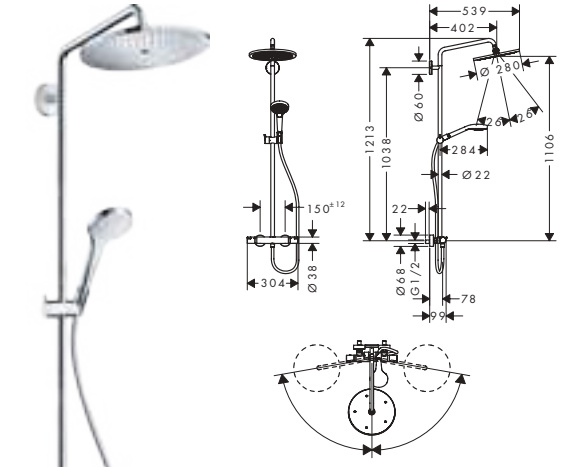

280 with hand hower 120 3jet

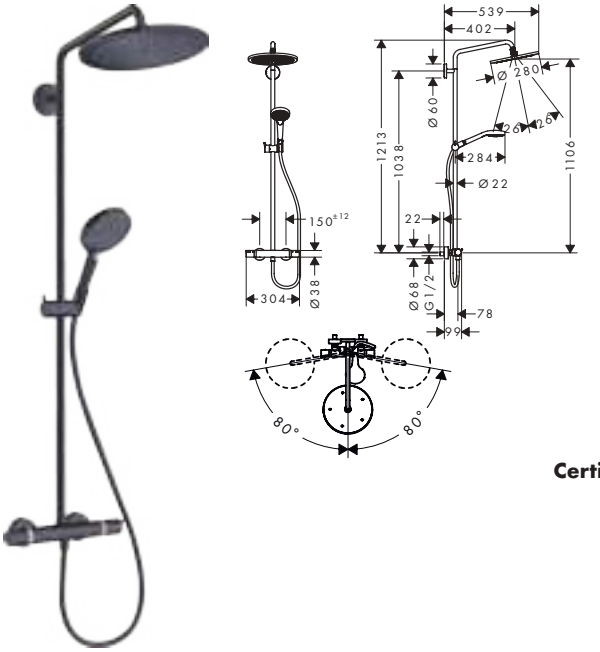

Sustainability

EcoSmart

Technologies

Select, AirPower, Quick Clean, XXL Performance

Spray types

Intense Rain, Massage, Rain, Rain Air, SoftRain, Whirl

Certificates/declarations

EPD

Overview variants

Shower head size	Spray types overhead shower	Hand shower	Spray types hand shower	Max. flow rate at 3 bar (l/min)	Min. flow pressure (bar)	Finish	Code no.
280	RainAir	110 Multi	Massage spray, IntenseRain, SoftRain	9	2.2	Chrome	26794000
280	RainAir	110 Multi	Massage spray, IntenseRain, SoftRain	15.7	1.3	Chrome	26790000
280	RainAir	120 3jet	RainAir, Rain, Whirl	9	2.2	Brushed Bronze	26891140
						Brushed Black Chrome	26891340
						Matt Black	26891670
						Matt White	26891700
						Polished Gold Optic	26891990
280	RainAir	120 3jet	RainAir, Rain, Whirl	15	1	Brushed Bronze	26890140
						Brushed Black Chrome	26890340
						Matt Black	26890670
						Matt White	26890700
						Polished Gold Optic	26890990

Optional parts:	Finish	Code no.
Wall bar spacer for Croma 100 Showerpipe	Chrome	95239000

Measurements within scale drawings are in mm.
Technical specifications and units of measure are subject to change.

Croma Select S Showerpipe 280 1jet with bath thermostat

Features

- consists of: overhead shower, hand shower, bath thermostat, shower hose, slider, shower bar
- overhead shower Croma 280
- shower head size overhead shower: 280 mm
- spray type overhead shower: RainAir
- spray disc surface: chrome
- flow rate RainAir spray at 3 bar: 16 l/min
- flow rate bath filler: 20 l/min
- spray type hand shower: Massage spray, IntenseRain, SoftRain
- flow rate of hand shower at 3 bar: 13 l/min
- maximum flow rate for Showerpipe at 3 bar: 19 l/min
- minimum flow pressure: 1 bar
- max. operating pressure: 10 bar
- ball-joint: overhead shower angle adjustable
- height-adjustable hand shower holder
- swivel shower arm
- thermostat Ecostat Comfort
- safety stop at 40 °C
- adjustable hot water limitation
- outlets controlled via turning handle
- suitable for continuous flow water heaters
- mounting type: exposed installation
- connection dimension: DN15
- connection thread: G ½
- centre distance: 150 ± 12 mm
- pipe can be shortened in height
- intrinsically safe against backflow
- shower bar diameter: 22 mm
- 3 functions

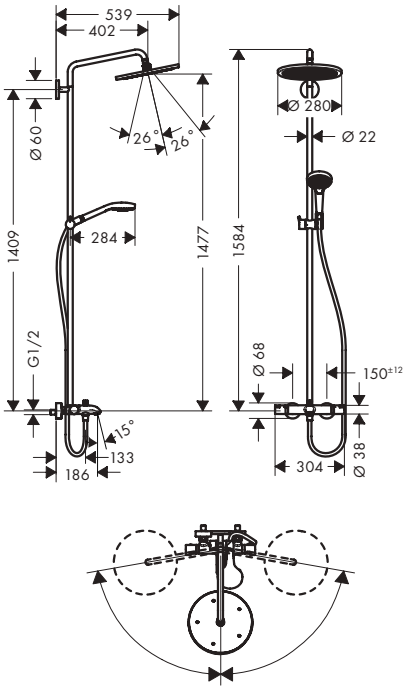

Technologies

Spray types

Certificates/declarations

EPD

Finish	Code no.
Chrome	26792000

Optional parts:	Finish	Code no.
Wall bar spacer for Croma 100 Showerpipe	Chrome	95239000

Measurements within scale drawings are in mm.
Technical specifications and units of measure are subject to change.

Croma Select S Showerpipe 280 1jet with single lever mixer

Features

- consists of: overhead shower, hand shower, slider, single lever shower mixer, shower hose, shower bar
- overhead shower Croma 280
- shower head size overhead shower: 280 mm
- spray type overhead shower: RainAir
- flow rate RainAir spray at 3 bar: 15 l/min
- spray type hand shower: Massage spray, IntenseRain, SoftRain
- maximum flow rate for Showerpipe at 3 bar: 15 l/min
- minimum flow pressure: 1 bar
- max. operating pressure: 10 bar
- ball-joint: overhead shower angle adjustable
- pipe can be shortened in height
- shower bar diameter: 22 mm
- height-adjustable hand shower holder
- shower arm length overhead shower: 400 mm
- swivelling shower arm
- suitable for continuous flow water heaters with an output of 18 kW
- mounting type: exposed installation
- connection dimension: DN15
- connection thread: G ½
- centre distance: 150 ± 12 mm
- ceramic cartridge
- temperature limitation adjustable
- 2 functions

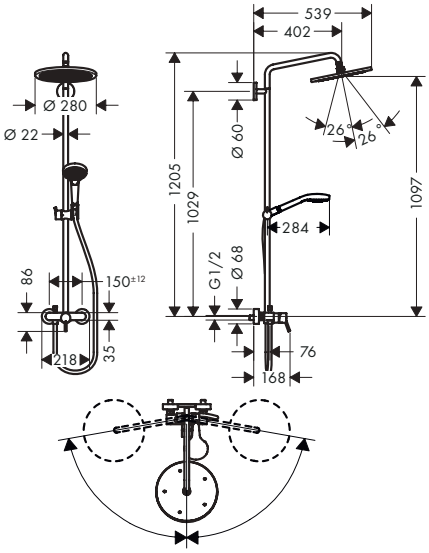

Technologies

AirPower · Quick Clean · XXL Performance

Spray types

Intense Rain · Massage · Rain Air · SoftRain

Certificates/declarations

EPD

Finish	Code no.
Chrome	26791000

Optional parts:	Finish	Code no.
Wall bar spacer for Croma 100 Showerpipe	Chrome	95239000

Measurements within scale drawings are in mm.
Technical specifications and units of measure are subject to change.

Croma Select S Showerpipe 280 1jet Reno

Features

- consists of: overhead shower, hand shower, shower hose, slider, shower bar
- overhead shower Croma 280
- shower head size overhead shower: 280 mm
- spray type overhead shower: RainAir
- flow rate RainAir spray at 3 bar: 10 l/min
- spray type hand shower: Massage spray, IntenseRain, SoftRain
- flow rate of hand shower at 3 bar: 10,2 l/min
- maximum flow rate for Showerpipe at 3 bar: 10,2 l/min
- minimum flow pressure: 1,5 bar
- max. operating pressure: 10 bar
- ball-joint: overhead shower angle adjustable
- mounting type: exposed installation
- pipe can be shortened in height
- shower bar diameter: 22 mm
- height-adjustable hand shower holder
- shower arm length: 400 mm
- swivelling shower arm
- water connection: Isiflex shower hose 80 cm
- connection dimension: DN15
- connection thread: G ½

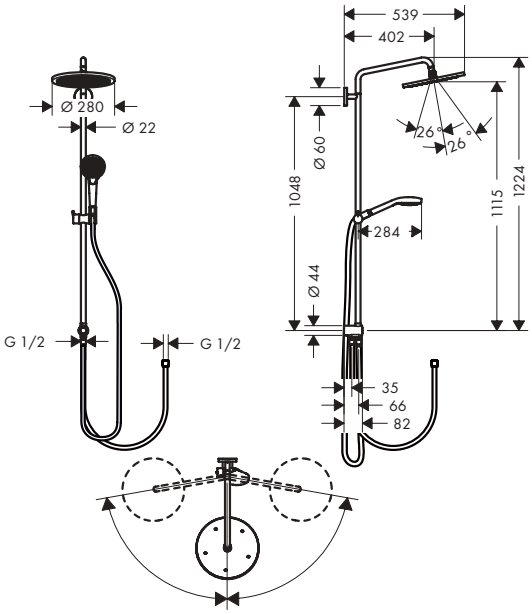

Technologies

AirPower · Quick Clean · XXL Performance

Spray types

Intense Rain · Massage · Rain Air · SoftRain

Certificates/declarations

EPD

Finish	Code no.
Chrome	26793000

Optional parts:	Finish	Code no.
Wall bar spacer for Croma 100 Showerpipe	Chrome	95239000

Measurements within scale drawings are in mm.
Technical specifications and units of measure are subject to change.

Croma Select S SemiPipe Multi with thermostat

Features

- consists of: hand shower, shower thermostat, shower hose, slider, shower bar
- wallbar could be also used as grab bar
- spray type hand shower: Massage spray, IntenseRain, SoftRain
- flow rate of hand shower at 3 bar: 16 l/min
- maximum flow rate for Showerpipe at 3 bar: 16 l/min
- minimum flow pressure: 1 bar
- max. operating pressure: 10 bar
- height-adjustable hand shower holder
- thermostat Ecostat Comfort
- safety stop at 40 °C
- adjustable hot water limitation
- outlets controlled via turning handle
- suitable for continuous flow water heaters
- mounting type: exposed installation
- connection dimension: DN15
- connection thread: G ½
- centre distance: 150 ± 12 mm
- pipe can be shortened in height
- pipe length: 1000 mm
- shower bar diameter: 25 mm
- TÜV certified
- 1 function

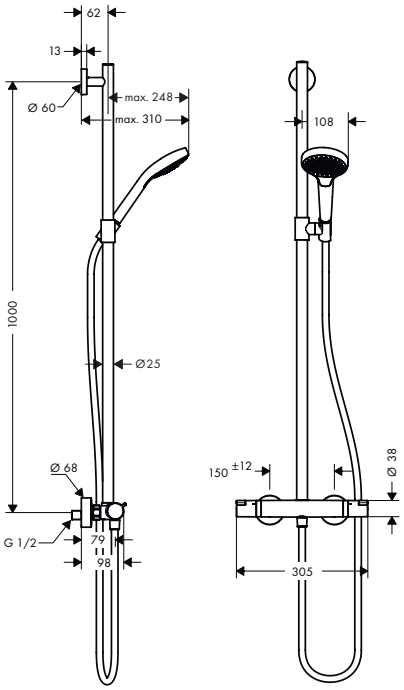

Technologies

Spray types

Finish	Code no.
White/Chrome	27247400

Optional parts:		Finish	Code no.
	Wall bar spacer for Croma 100 Showerpipe	Chrome	95239000

Measurements within scale drawings are in mm.
Technical specifications and units of measure are subject to change.

Croma Select E SemiPipe Multi with thermostat

Features

- consists of: hand shower, shower thermostat, shower hose, slider, shower bar
- wallbar could be also used as grab bar
- spray type hand shower: Massage spray, IntenseRain, SoftRain
- flow rate of hand shower at 3 bar: 16 l/min
- maximum flow rate for Showerpipe at 3 bar: 16 l/min
- minimum flow pressure: 1 bar
- max. operating pressure: 10 bar
- height-adjustable hand shower holder
- thermostat Ecostat Comfort
- safety stop at 40 °C
- adjustable hot water limitation
- outlets controlled via turning handle
- mounting type: exposed installation
- connection dimension: DN15
- connection thread: G ½
- centre distance: 150 ± 12 mm
- pipe can be shortened in height
- pipe length: 1000 mm
- shower bar diameter: 25 mm
- TÜV certified
- 1 function

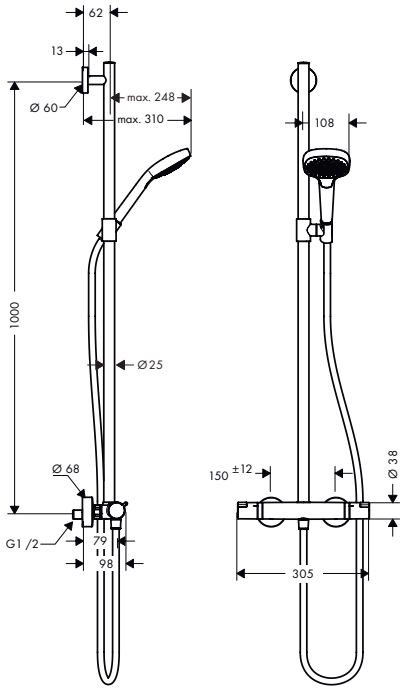

Technologies

Spray types

Finish	Code no.
White/Chrome	27248400

Optional parts:		Finish	Code no.
	Wall bar spacer for Croma 100 Showerpipe	Chrome	95239000

Measurements within scale drawings are in mm.
Technical specifications and units of measure are subject to change.

Croma E Showerpipes 1jet with thermostat

Features of all variants

- consists of: overhead shower, hand shower, shower thermostat, shower hose, slider, shower bar
- overhead shower Croma E 280 1jet
- shower head size overhead shower: 280 x 170 mm
- spray type overhead shower: RainAir
- spray type hand shower: Massage spray, IntenseRain, SoftRain
- max. operating pressure: 10 bar
- ball-joint: overhead shower angle adjustable
- height-adjustable slider with locking push-button slider
- shower arm length overhead shower: 340 mm
- swivel shower arm
- CoolContact thermostat: Prevents the housing from heating up, making showering even safer
- thermostat Ecostat E
- safety stop at 40 °C
- adjustable hot water limitation
- suitable for continuous flow water heaters
- mounting type: exposed installation
- connection thread: G ½
- centre distance: 150 ± 12 mm
- pipe can be shortened in height
- intrinsically safe against backflow
- pipe length: 1177 mm
- shower bar diameter: 22 mm
- 2 functions

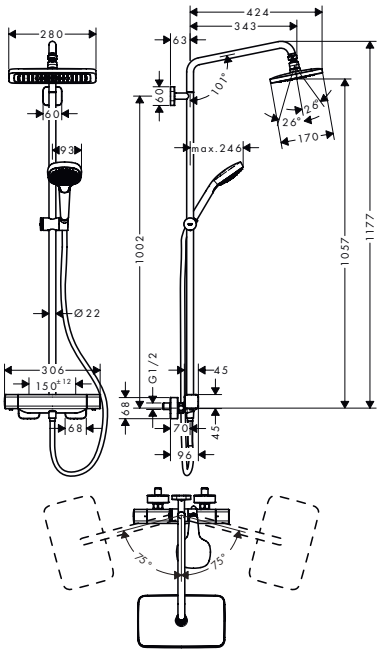

Sustainability

EcoSmart

Technologies

Cool Contact · Select · AirPower · Quick Clean · XXL Performance

Spray types

Intense Rain · Massage · Rain Air · SoftRain

Certificates/declarations

EPD

Overview variants

Shower head size	Number of sprays	Spray types	Max. flow rate at 3 bar (l/min)	Min. flow pressure (bar)	Finish	Code no.
280	1	RainAir	8.5	1	Chrome	27660000
280	1	RainAir	15	1.7	Chrome	27630000

Measurements within scale drawings are in mm.
Technical specifications and units of measure are subject to change.

Croma E Showerpipe 280 1jet with bath thermostat

Features

- consists of: overhead shower, hand shower, bath thermostat, shower hose, slider, shower bar
- shower head size overhead shower: 280 x 170 mm
- spray type overhead shower: RainAir
- spray disc surface: chrome
- flow rate RainAir spray at 3 bar: 15 l/min
- flow rate bath filler: 20 l/min
- spray type hand shower: Massage spray, IntenseRain, SoftRain
- flow rate of hand shower at 3 bar: 13,6 l/min
- maximum flow rate for Showerpipe at 3 bar: 20,3 l/min
- minimum flow pressure: 1,7 bar
- max. operating pressure: 10 bar
- ball-joint: overhead shower angle adjustable
- height-adjustable slider with locking push-button slider
- swivel shower arm
- CoolContact thermostat: Prevents the housing from heating up, making showering even safer
- thermostat Ecostat E
- safety stop at 40 °C
- adjustable hot water limitation
- suitable for continuous flow water heaters
- mounting type: exposed installation
- connection thread: G ½
- centre distance: 150 ± 12 mm
- pipe can be shortened in height
- intrinsically safe against backflow
- pipe length: 1660 mm
- shower bar diameter: 22 mm
- 3 functions

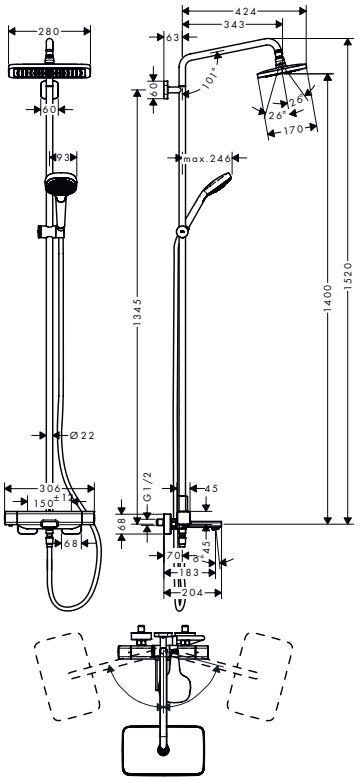

Technologies

Cool Contact · AirPower · Quick Clean · XXL Performance

Spray types

Intense Rain · Massage · Rain Air · SoftRain

Certificates/declarations

EPD

Finish	Code no.
Chrome	27687000

Measurements within scale drawings are in mm.
Technical specifications and units of measure are subject to change.

Croma Showerpipes 1jet with thermostat

Features of all variants

- consists of: overhead shower, hand shower, shower thermostat, shower hose, slider, shower bar
- overhead shower Croma 220
- shower head size overhead shower: 220 mm
- spray type overhead shower: RainAir
- spray type hand shower: Rain, Massage spray, Shampoo spray, normal spray
- max. operating pressure: 10 bar
- ball-joint: overhead shower angle adjustable
- height-adjustable hand shower holder
- shower arm length overhead shower: 400 mm
- swivel shower arm
- thermostat Ecostat Comfort
- safety stop at 40 °C
- adjustable hot water limitation
- outlets controlled via turning handle
- suitable for continuous flow water heaters
- mounting type: exposed installation
- connection dimension: DN15
- connection thread: G ½
- centre distance: 150 ± 12 mm
- pipe can be shortened in height
- intrinsically safe against backflow
- shower bar diameter: 22 mm
- 2 functions

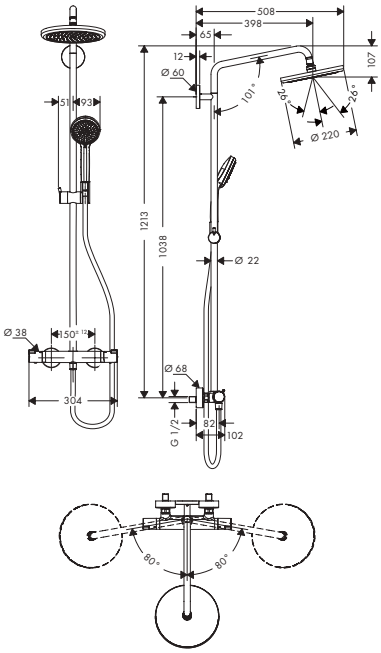

Sustainability

EcoSmart

Technologies

AirPower · Quick Clean · XXL Performance

Spray types

Massage · Normal · Rain · Rain Air · Shampoo

Certificates/declarations

EPD

Overview variants

Shower head size	Number of sprays	Spray types	Max. flow rate at 3 bar (l/min)	Min. flow pressure (bar)	Finish	Code no.
220	1	RainAir	9	1.7	Chrome	27188000
220	1	RainAir	15	1.2	Chrome	27185000

Optional parts:	Finish	Code no.
Wall bar spacer for Croma 100 Showerpipe	Chrome	95239000

Measurements within scale drawings are in mm.
Technical specifications and units of measure are subject to change.

Croma Showerpipe 220 1jet with bath thermostat

Features

- consists of: overhead shower, hand shower, bath thermostat, shower hose, slider, shower bar
- overhead shower Croma 220
- shower head size overhead shower: 220 mm
- spray type overhead shower: RainAir
- spray disc surface: chrome
- flow rate RainAir spray at 3 bar: 17 l/min
- flow rate bath filler: 20 l/min
- spray type hand shower: Rain, Massage spray, Shampoo spray, normal spray
- flow rate of hand shower at 3 bar: 17,2 l/min
- maximum flow rate for Showerpipe at 3 bar: 22 l/min
- minimum flow pressure: 1 bar
- max. operating pressure: 10 bar
- ball-joint: overhead shower angle adjustable
- height-adjustable hand shower holder
- swivel shower arm
- thermostat Ecostat Comfort
- safety stop at 40 °C
- adjustable hot water limitation
- outlets controlled via turning handle
- suitable for continuous flow water heaters
- mounting type: exposed installation
- connection dimension: DN15
- connection thread: G ½
- centre distance: 150 ± 12 mm
- pipe can be shortened in height
- intrinsically safe against backflow
- shower bar diameter: 22 mm
- 3 functions

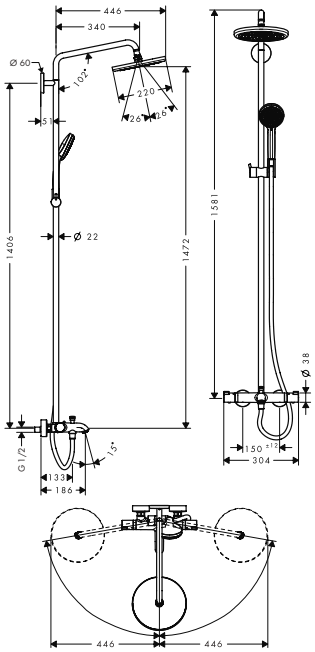

Technologies

Spray types

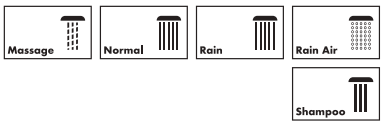

Certificates/declarations

Finish	Code no.
Chrome	27223000

Optional parts:	Finish	Code no.
Wall bar spacer for Croma 100 Showerpipe	Chrome	95239000

Measurements within scale drawings are in mm.
Technical specifications and units of measure are subject to change.

Croma Showerpipe 220 1jet with single lever mixer

Features

- consists of: overhead shower, hand shower, single lever shower mixer, shower hose, slider, shower bar
- overhead shower Croma 220
- shower head size overhead shower: 220 mm
- spray type overhead shower: RainAir
- spray disc surface: chrome
- flow rate RainAir spray at 3 bar: 16 l/min
- spray type hand shower: Rain, Massage spray, Shampoo spray, normal spray
- flow rate of hand shower at 3 bar: 12,5 l/min
- maximum flow rate for Showerpipe at 3 bar: 16 l/min
- minimum flow pressure: 1 bar
- max. operating pressure: 10 bar
- ball-joint: overhead shower angle adjustable
- pipe can be shortened in height
- shower bar diameter: 22 mm
- height-adjustable hand shower holder
- shower arm length overhead shower: 400 mm
- swivelling shower arm
- suitable for continuous flow water heaters with an output of 18 kW
- mounting type: exposed installation
- connection dimension: DN15
- connection thread: G ½
- centre distance: 150 ± 12 mm
- ceramic cartridge
- temperature limitation adjustable
- 2 functions

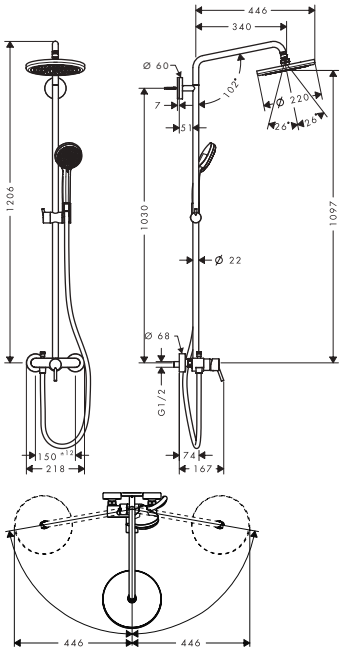

Technologies

AirPower · Quick Clean · XXL Performance

Spray types

Massage · Normal · Rain · Rain Air · Shampoo

Certificates/declarations

EPD

Finish	Code no.
Chrome	27222000

Optional parts:	Finish	Code no.
Wall bar spacer for Croma 100 Showerpipe	Chrome	95239000

Measurements within scale drawings are in mm.
Technical specifications and units of measure are subject to change.

Croma Showerpipe 220 1jet Reno

Features

- consists of: overhead shower, hand shower, shower hose, slider, shower bar
- overhead shower Croma 220
- shower head size overhead shower: 220 mm
- spray type overhead shower: RainAir
- spray disc surface: chrome
- flow rate RainAir spray at 3 bar: 14 l/min
- spray type hand shower: Rain, Massage spray, Shampoo spray, normal spray
- flow rate of hand shower at 3 bar: 14,5 l/min
- maximum flow rate for Showerpipe at 3 bar: 18,5 l/min
- minimum flow pressure: 1,7 bar
- max. operating pressure: 6 bar
- ball-joint: overhead shower angle adjustable
- mounting type: exposed installation
- pipe can be shortened in height
- shower bar diameter: 22 mm
- height-adjustable hand shower holder
- shower arm length: 400 mm
- swivelling shower arm
- water connection: Isiflex shower hose 80 cm
- connection dimension: DN15
- connection thread: G ½
- suitable for continuous flow water heaters

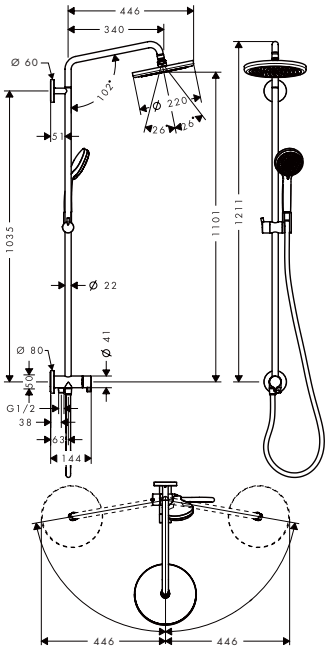

Technologies

Spray types

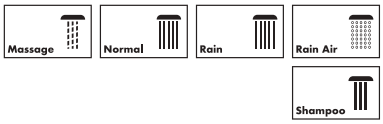

Certificates/declarations

Finish	Code no.
Chrome	27224000

Optional parts:	Finish	Code no.
Wall bar spacer for Croma 100 Showerpipe	Chrome	95239000

Measurements within scale drawings are in mm.
Technical specifications and units of measure are subject to change.

Crometta S Showerpipes 1jet with thermostat

Features of all variants

- consists of: overhead shower, hand shower, shower thermostat, shower hose, slider, shower bar
- overhead shower Crometta S 240
- shower head size overhead shower: 240 mm
- spray type overhead shower: Rain
- spray type hand shower: Rain, IntenseRain
- max. operating pressure: 10 bar
- ball-joint: overhead shower angle adjustable
- hand shower holder inclination angle can be adjusted by 45°
- height-adjustable hand shower holder
- shower arm length overhead shower: 350 mm
- thermostat Ecostat 1001 CL
- safety stop at 40°C
- adjustable hot water limitation
- outlets controlled via turning handle
- suitable for continuous flow water heaters
- mounting type: exposed installation
- connection dimension: DN15
- connection thread: G ½
- centre distance: 150 ± 12 mm
- pipe can be shortened in height
- intrinsically safe against backflow
- pipe length: 1201 mm
- shower bar diameter: 22 mm
- 2 functions

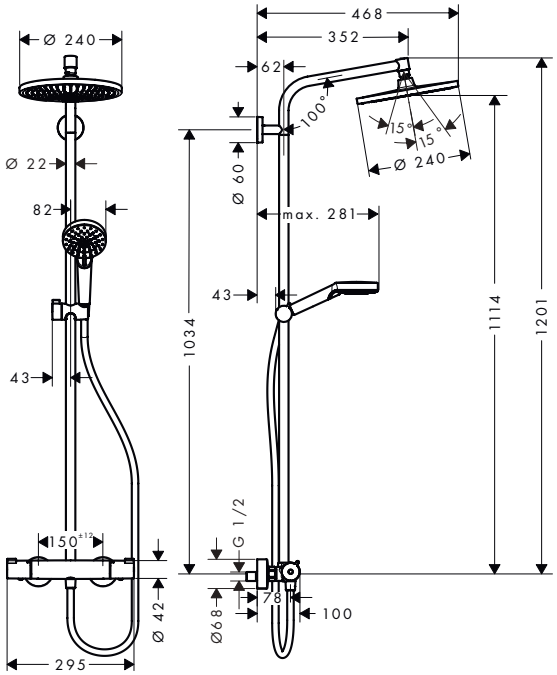

Sustainability

EcoSmart

Technologies

Quick Clean

XXL Performance

Spray types

Intense Rain

Rain

Certificates/declarations

EPD

Overview variants

Shower head size	Number of sprays	Spray types	Max. flow rate at 3 bar (l/min)	Min. flow pressure (bar)	Finish	Code no.
240	1	Rain	6.7	1	Chrome	27268000
240	1	Rain	16	1.2	Chrome	27267000

Optional parts:	Finish	Code no.
Wall bar spacer for Croma 100 Showerpipe	Chrome	95239000

Measurements within scale drawings are in mm.
Technical specifications and units of measure are subject to change.

Crometta S Showerpipe 240 1jet with bath thermostat

Features

- consists of: overhead shower, hand shower, bath thermostat, shower hose, slider, shower bar
- overhead shower Crometta S 240
- shower head size overhead shower: 240 mm
- spray type overhead shower: Rain
- spray disc surface: chrome
- flow rate Rain spray at 3 bar: 17 l/min
- spray type hand shower: Rain, IntenseRain
- flow rate of hand shower at 3 bar: 13,3 l/min
- maximum flow rate for Showerpipe at 3 bar: 20,5 l/min
- minimum flow pressure: 1 bar
- max. operating pressure: 10 bar
- ball-joint: overhead shower angle adjustable
- hand shower holder inclination angle can be adjusted by 45°
- height-adjustable hand shower holder
- shower arm length overhead shower: 350 mm
- thermostat Ecostat Comfort
- safety stop at 40°C
- adjustable hot water limitation
- outlets controlled via turning handle
- suitable for continuous flow water heaters
- mounting type: exposed installation
- connection dimension: DN15
- connection thread: G ½
- centre distance: 150 ± 12 mm
- pipe can be shortened in height
- intrinsically safe against backflow
- shower bar diameter: 22 mm
- 3 functions

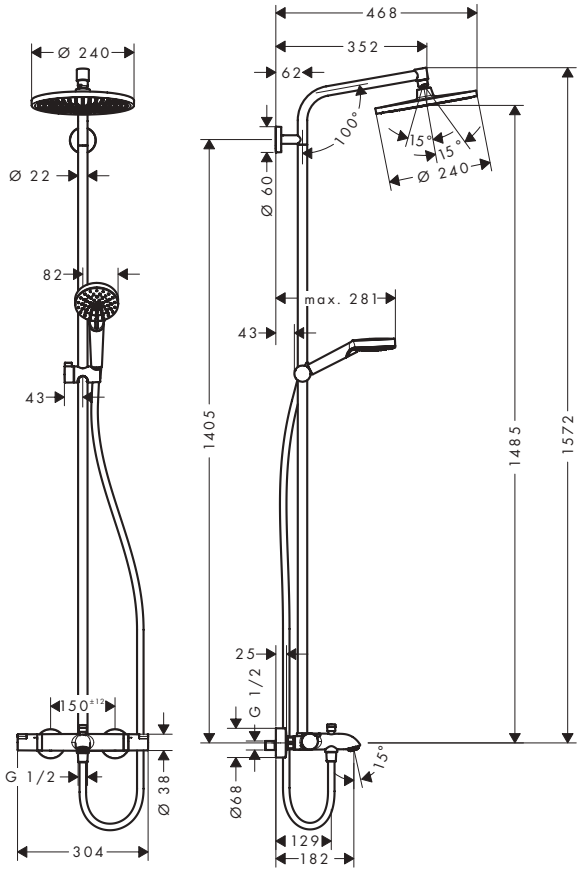

Technologies

Spray types

Certificates/declarations

Finish	Code no.
Chrome	27320000

Optional parts:	Finish	Code no.
Wall bar spacer for Croma 100 Showerpipe	Chrome	95239000

Measurements within scale drawings are in mm.
Technical specifications and units of measure are subject to change.

Crometta S Showerpipe 240 1jet with single lever mixer

Features

- consists of: overhead shower, hand shower, single lever shower mixer, shower hose, slider, shower bar
- overhead shower Crometta S 240
- shower head size overhead shower: 240 mm
- spray type overhead shower: Rain
- spray disc surface: chrome
- flow rate Rain spray at 3 bar: 15 l/min
- spray type hand shower: Rain, IntenseRain
- flow rate of hand shower at 3 bar: 13 l/min
- maximum flow rate for Showerpipe at 3 bar: 15 l/min
- minimum flow pressure: 1,8 bar
- max. operating pressure: 10 bar
- ball-joint: overhead shower angle adjustable
- hand shower holder inclination angle can be adjusted by 45°
- pipe can be shortened in height
- shower bar diameter: 22 mm
- height-adjustable hand shower holder
- shower arm length overhead shower: 350 mm
- suitable for continuous flow water heaters with an output of 18 kW
- mounting type: exposed installation
- connection dimension: DN15
- connection thread: G ½
- centre distance: 150 ± 12 mm
- ceramic cartridge
- temperature limitation not adjustable
- adjustable hot water limitation
- 2 functions

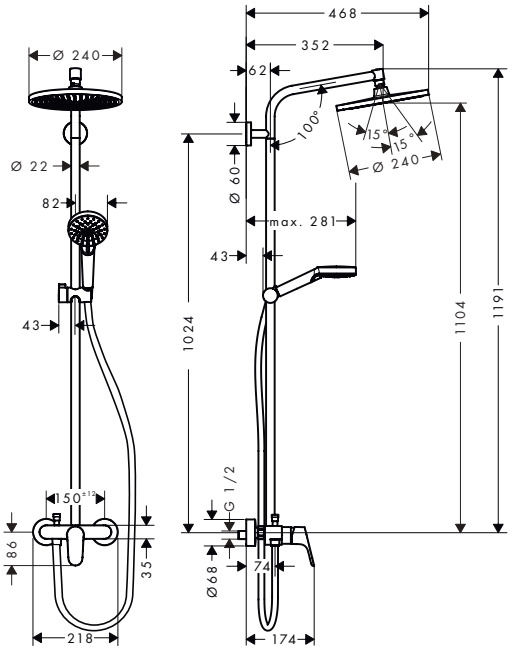

Technologies

Spray types

Certificates/declarations

Finish	Code no.
Chrome	27269000

Optional parts:	Finish	Code no.
Wall bar spacer for Croma 100 Showerpipe	Chrome	95239000

Measurements within scale drawings are in mm.
Technical specifications and units of measure are subject to change.

Crometta S Showerpipe 240 1jet EcoSmart Reno

Features

- consists of: overhead shower, hand shower, shower bar, slider, shower hose
- overhead shower Crometta S 240
- shower head size overhead shower: 240 mm
- spray type overhead shower: Rain
- spray disc surface: chrome
- flow rate Rain spray at 3 bar: 9 l/min
- spray type hand shower: Rain, IntenseRain
- flow rate of hand shower at 3 bar: 8,3 l/min
- maximum flow rate for Showerpipe at 3 bar: 9 l/min
- minimum flow pressure: 1 bar
- max. operating pressure: 10 bar
- ball-joint: overhead shower angle adjustable
- hand shower holder inclination angle can be adjusted by 45°
- mounting type: exposed installation
- pipe can be shortened in height
- shower bar diameter: 22 mm
- height-adjustable hand shower holder
- shower arm length: 350 mm
- water connection: Isiflex shower hose 80 cm
- connection dimension: DN15
- connection thread: G ½
- suitable for continuous flow water heaters

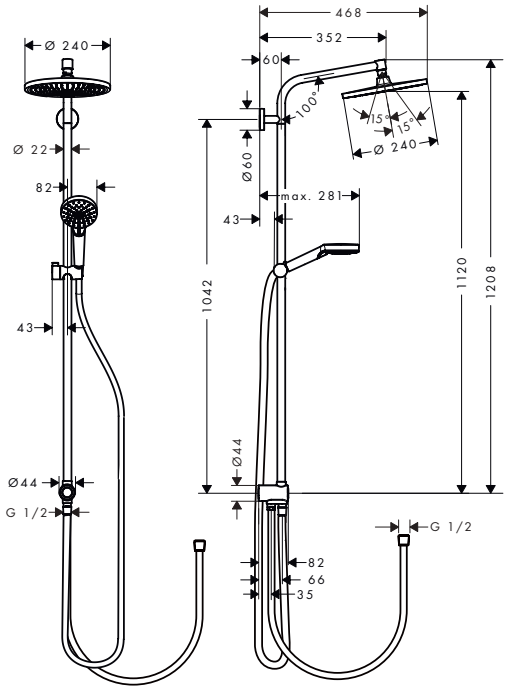

Sustainability

EcoSmart

Technologies

Quick Clean

XXL Performance

Spray types

Intense Rain

Rain

Certificates/declarations

EPD

Finish	Code no.
Chrome	27270000

Optional parts:	Finish	Code no.
Wall bar spacer for Croma 100 Showerpipe	Chrome	95239000

Measurements within scale drawings are in mm.
Technical specifications and units of measure are subject to change.

Crometta E Showerpipes 1jet with thermostat

Features of all variants

- consists of: overhead shower, hand shower, shower thermostat, shower hose, slider, shower bar
- overhead shower Crometta E 240
- shower head size overhead shower: 240 x 240 mm
- spray type overhead shower: Rain
- spray disc surface: chrome
- spray type hand shower: Rain, IntenseRain
- max. operating pressure: 10 bar
- ball-joint: overhead shower angle adjustable
- hand shower holder inclination angle can be adjusted by 45°
- height-adjustable hand shower holder
- shower arm length overhead shower: 350 mm
- thermostat Ecostat 1001 CL
- safety stop at 40°C
- adjustable hot water limitation
- outlets controlled via turning handle
- suitable for continuous flow water heaters
- mounting type: exposed installation
- connection dimension: DN15
- connection thread: G ½
- centre distance: 150 ± 12 mm
- pipe can be shortened in height
- intrinsically safe against backflow
- pipe length: 1201 mm
- shower bar diameter: 22 mm
- 2 functions

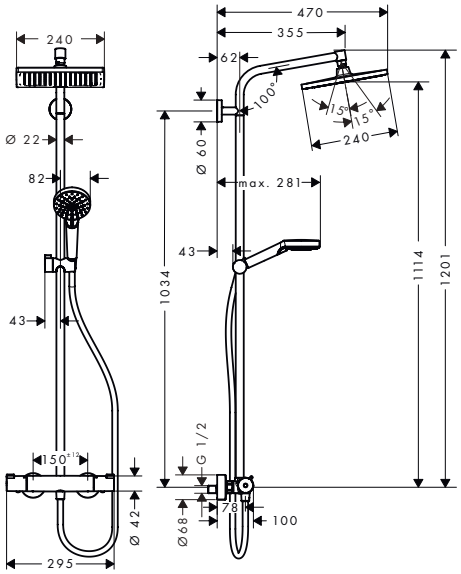

Technologies

Spray types

Certificates/declarations

Overview variants

Shower head size	Number of sprays	Spray types	Max. flow rate at 3 bar (l/min)	Min. flow pressure (bar)	Finish	Code no.
240	1	Rain	6.7	1	Chrome	27281000
240	1	Rain	15	1.2	Chrome	27271000

Optional parts:		Finish	Code no.
	Wall bar spacer for Croma 100 Showerpipe	Chrome	95239000

Measurements within scale drawings are in mm.
Technical specifications and units of measure are subject to change.

Crometta E Showerpipe 240 1jet with bath thermostat

Features

- consists of: overhead shower, hand shower, bath thermostat, shower hose, slider, shower bar
- overhead shower Crometta E 240
- shower head size overhead shower: 240 x 240 mm
- spray type overhead shower: Rain
- spray disc surface: chrome
- flow rate Rain spray at 3 bar: 17 l/min
- flow rate bath filler: 20 l/min
- spray type hand shower: Rain, IntenseRain
- flow rate of hand shower at 3 bar: 13,5 l/min
- maximum flow rate for Showerpipe at 3 bar: 19,5 l/min
- minimum flow pressure: 1 bar
- max. operating pressure: 10 bar
- ball-joint: overhead shower angle adjustable
- hand shower holder inclination angle can be adjusted by 45°
- height-adjustable hand shower holder
- shower arm length overhead shower: 350 mm
- thermostat Ecostat Comfort
- safety stop at 40°C
- adjustable hot water limitation
- outlets controlled via turning handle
- suitable for continuous flow water heaters
- mounting type: exposed installation
- connection dimension: DN15
- connection thread: G ½
- centre distance: 150 ± 12 mm
- pipe can be shortened in height
- intrinsically safe against backflow
- shower bar diameter: 22 mm
- 3 functions

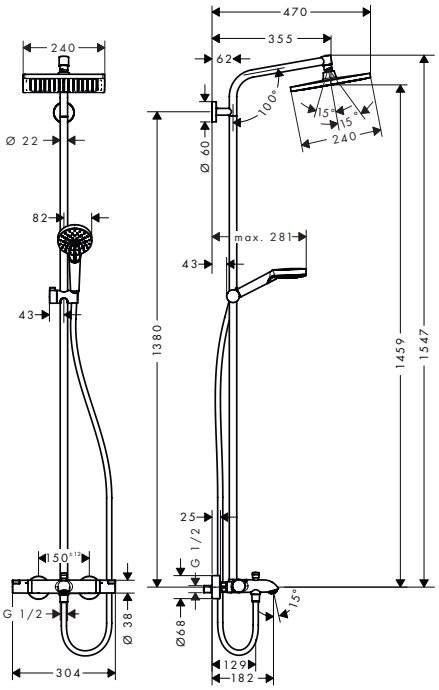

Technologies

Quick Clean
XXL Performance

Spray types

Intense Rain
Rain

Certificates/declarations

EPD

Finish	Code no.
Chrome	27298000

Optional parts:	Finish	Code no.
Wall bar spacer for Croma 100 Showerpipe	Chrome	95239000

Measurements within scale drawings are in mm.
Technical specifications and units of measure are subject to change.

Crometta E Showerpipe 240 1jet with single lever mixer

Features

- consists of: overhead shower, hand shower, single lever shower mixer, shower hose, slider, shower bar
- overhead shower Crometta E 240
- shower head size overhead shower: 240 x 240 mm
- spray type overhead shower: Rain
- spray disc surface: chrome
- flow rate Rain spray at 3 bar: 15 l/min
- spray type hand shower: Rain, IntenseRain
- flow rate of hand shower at 3 bar: 13 l/min
- maximum flow rate for Showerpipe at 3 bar: 15 l/min
- minimum flow pressure: 1,8 bar
- max. operating pressure: 10 bar
- ball-joint: overhead shower angle adjustable
- hand shower holder inclination angle can be adjusted by 45°
- pipe can be shortened in height
- shower bar diameter: 22 mm
- height-adjustable hand shower holder
- shower arm length overhead shower: 350 mm
- suitable for continuous flow water heaters with an output of 18 kW
- mounting type: exposed installation
- connection dimension: DN15
- connection thread: G ½
- centre distance: 150 ± 12 mm
- ceramic cartridge
- temperature limitation not adjustable
- adjustable hot water limitation
- 2 functions

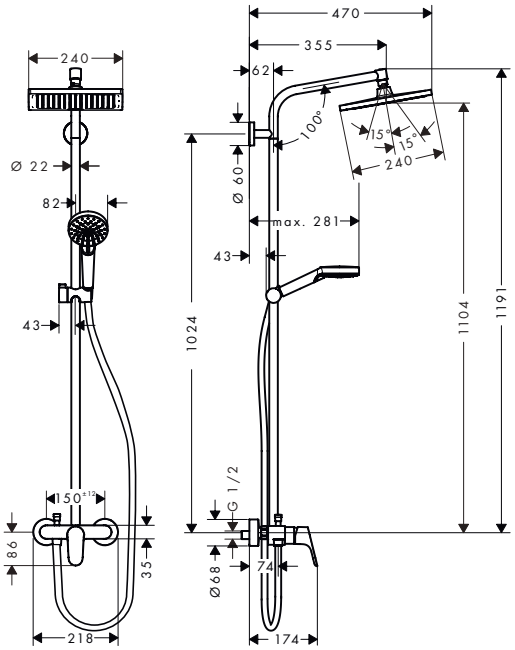

Technologies

Quick Clean
XXL Performance

Spray types

Intense Rain
Rain

Certificates/declarations

EPD

Finish	Code no.
Chrome	27284000

Optional parts:	Finish	Code no.
Wall bar spacer for Croma 100 Showerpipe	Chrome	95239000

Measurements within scale drawings are in mm.
Technical specifications and units of measure are subject to change.

Crometta E Showerpipe 240 1jet EcoSmart Reno

Features

- consists of: overhead shower, hand shower, shower bar, slider, shower hose
- overhead shower Crometta E 240
- shower head size overhead shower: 240 x 240 mm
- spray type overhead shower: Rain
- spray disc surface: chrome
- flow rate Rain spray at 3 bar: 9 l/min
- spray type hand shower: Rain, IntenseRain
- maximum flow rate for Showerpipe at 3 bar: 9 l/min
- minimum flow pressure: 1 bar
- max. operating pressure: 10 bar
- ball-joint: overhead shower angle adjustable
- hand shower holder inclination angle can be adjusted by 45°
- mounting type: exposed installation
- pipe can be shortened in height
- shower bar diameter: 22 mm
- height-adjustable hand shower holder
- shower arm length: 350 mm
- water connection: Isiflex shower hose 80 cm
- connection dimension: DN15
- connection thread: G ½
- suitable for continuous flow water heaters

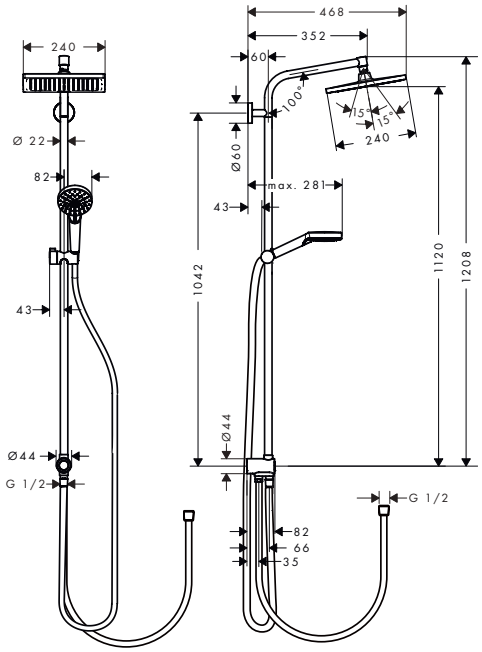

Sustainability

EcoSmart

Technologies

Quick Clean

XXL Performance

Spray types

Intense Rain

Rain

Certificates/declarations

EPD

Finish	Code no.
Chrome	27289000

Optional parts:	Finish	Code no.
Wall bar spacer for Croma 100 Showerpipe	Chrome	95239000

Measurements within scale drawings are in mm.
Technical specifications and units of measure are subject to change.

Vernis Blend Showerpipes 1jet with thermostat

Features of all variants

- spray type overhead shower: Rain
- spray type hand shower: Rain, IntenseRain
- minimum flow pressure: 1 bar
- max. operating pressure: 10 bar
- ball-joint: overhead shower angle adjustable
- height-adjustable slider with locking push-button slider
- shower arm length overhead shower: 426 mm
- thermostat Vernis
- safety stop at 40 °C
- adjustable hot water limitation
- outlets controlled via turning handle
- suitable for continuous flow water heaters
- mounting type: exposed installation
- connection dimension: DN15
- connection thread: G ½
- centre distance: 150 ± 12 mm
- intrinsically safe against backflow
- pipe length: 1124 mm
- shower bar diameter: 19 mm
- 2 functions

240

200

Sustainability

EcoSmart | Eco Smart+

Technologies

Quick Clean | XXL Performance

Spray types

Intense Rain | Rain

Certificates/declarations

EPD

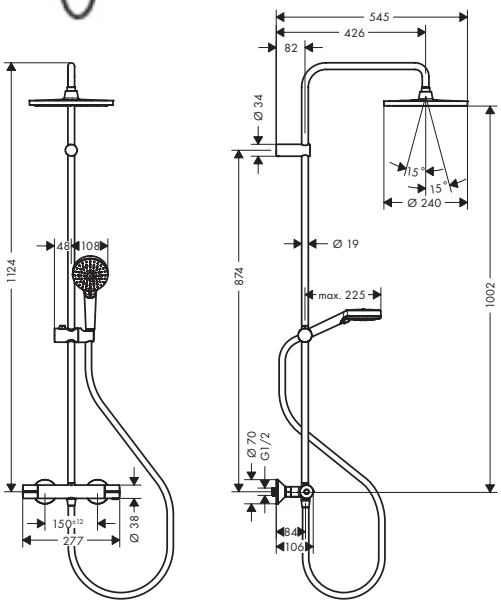

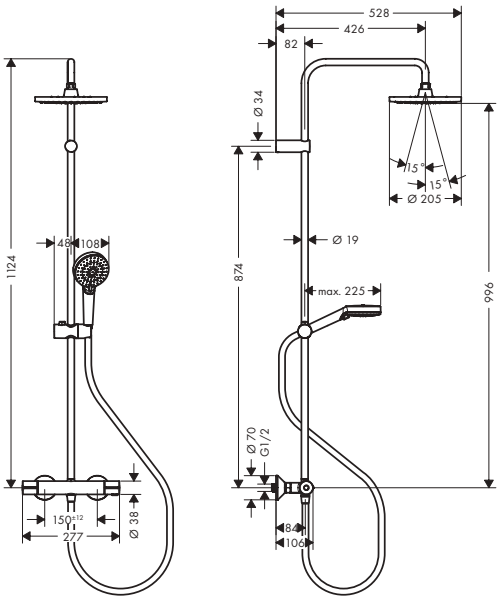

Overview variants

Shower head size	Number of sprays	Spray types	Max. flow rate at 3 bar (l/min)	Min. flow pressure (bar)	Finish	Code no.
240	1	Rain	6.9	1	Matt Black	26428670
240	1	Rain	15.8	1	Matt Black	26426670
200	1	Rain	5.7	1	Chrome	26318000
200	1	Rain	6.8	1	Chrome	26089000
					Matt Black	26089670
200	1	Rain	15.2	1	Chrome	26276000
					Matt Black	26276670

Measurements within scale drawings are in mm.
Technical specifications and units of measure are subject to change.

Vernis Blend Showerpipes 1jet with bath thermostat

Features of all variants

- consists of: overhead shower, hand shower, bath thermostat, shower hose, shower bar, slider
- spray type overhead shower: Rain
- flow rate bath filler: 20 l/min
- spray type hand shower: Rain, IntenseRain
- maximum flow rate for Showerpipe at 3 bar: 20 l/min
- minimum flow pressure: 1 bar
- max. operating pressure: 10 bar
- ball-joint: overhead shower angle adjustable
- height-adjustable slider with locking push-button slider
- shower arm length overhead shower: 426 mm
- thermostat Vernis
- safety stop at 40 °C
- adjustable hot water limitation
- outlets controlled via turning handle
- suitable for continuous flow water heaters
- mounting type: exposed installation
- connection dimension: DN15
- connection thread: G ½
- centre distance: 150 ± 12 mm
- intrinsically safe against backflow
- shower bar diameter: 19 mm
- 3 functions

240

200

Sustainability

EcoSmart

Technologies

Quick Clean

XXL Performance

Spray types

Intense Rain

Rain

Certificates/declarations

EPD

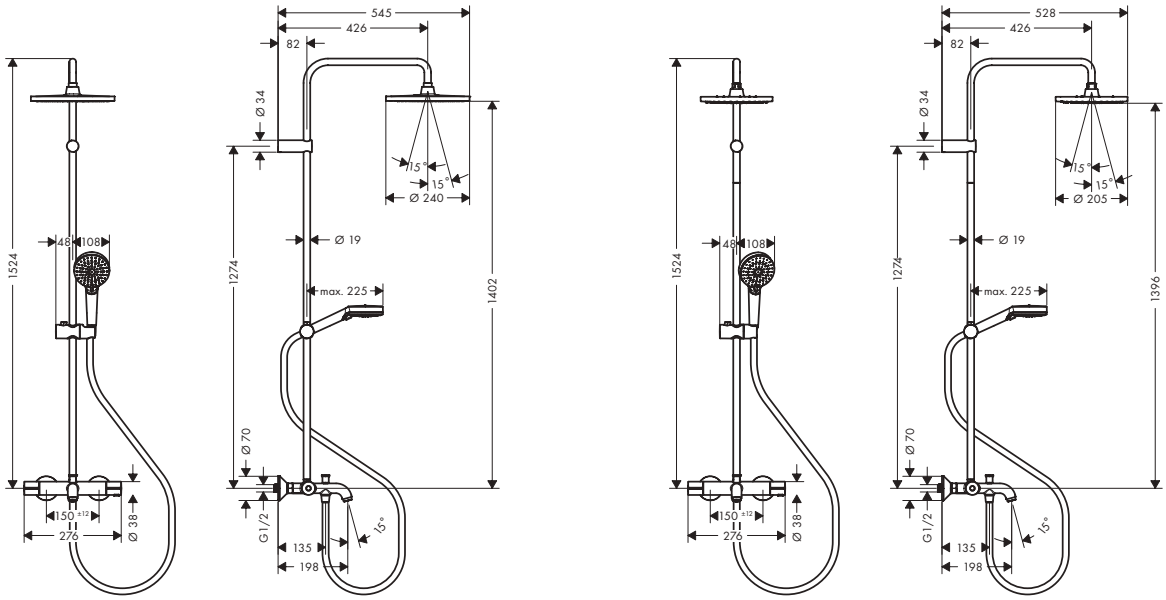

Overview variants

Shower head size	Number of sprays	Spray types	Min. flow pressure (bar)	flow rate of hand shower at 3 bar (l/min)	flow rate for overhead shower at 3 bar (l/min)	flow rate for bath spout at 3 bar (l/min)	Thermostat	Finish	Code no.
240	1	Rain	1	15.2	18.2	20	Vernis	Matt Black	26899670
200	1	Rain	1	6.9	9	20	Vernis	Chrome	26079000
200	1	Rain	1	15.2	12.4	20	Vernis	Chrome	26274000

Measurements within scale drawings are in mm.
Technical specifications and units of measure are subject to change.

Vernis Blend Showerpipes 1jet Reno

Features of all variants

- consists of: overhead shower, hand shower, shower hose, slider
- overhead shower Vernis Blend 200 1jet
- shower head size overhead shower: 205 mm
- spray type overhead shower: Rain
- spray type hand shower: Rain, IntenseRain
- max. operating pressure: 10 bar
- ball-joint: overhead shower angle adjustable
- mounting type: exposed installation
- shower bar diameter: 19 mm
- height-adjustable slider with locking push-button slider
- shower arm length: 400 mm
- water connection: Metaflex shower hose 80 cm and 160 cm
- connection dimension: DN15
- connection thread: G ½
- suitable for continuous flow water heaters

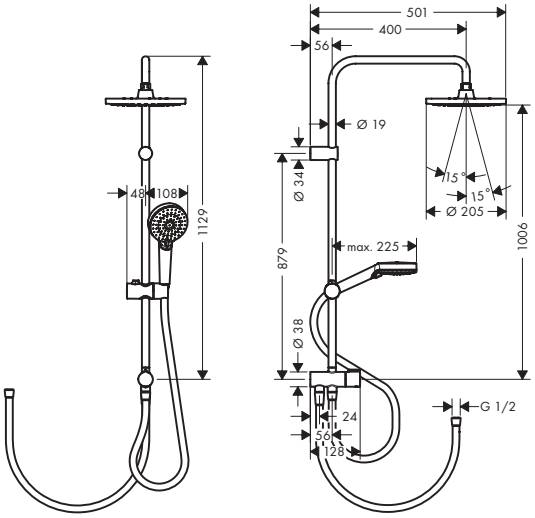

Sustainability

EcoSmart

Technologies

Quick clean

XXL Performance

Spray types

Intense Rain

Rain

Overview variants

Shower head size	Number of sprays	Spray types	Max. flow rate at 3 bar (l/min)	Min. flow pressure (bar)	Finish	Code no.
200	1	Rain	6.8	0.8	Chrome	26099000
					Matt Black	26099670
200	1	Rain	15.2	1	Chrome	26272000
					Matt Black	26272670

Measurements within scale drawings are in mm.
Technical specifications and units of measure are subject to change.

Vernis Shape Showerpipes 1jet with thermostat

Features of all variants

- spray type overhead shower: Rain
- spray type hand shower: Rain, IntenseRain
- max. operating pressure: 10 bar
- ball-joint: overhead shower angle adjustable
- height-adjustable slider with locking push-button slider
- shower arm length overhead shower: 426 mm
- thermostat Vernis
- safety stop at 40 °C
- adjustable hot water limitation
- outlets controlled via turning handle
- suitable for continuous flow water heaters
- mounting type: exposed installation
- connection dimension: DN15
- connection thread: G ½
- centre distance: 150 ± 12 mm
- intrinsically safe against backflow
- pipe length: 1124 mm
- shower bar diameter: 19 mm
- 2 functions

240/240

230/170

Sustainability

EcoSmart | Eco Smart+

Technologies

Quick Clean | XXL Performance

Spray types

Intense Rain | Rain

Certificates/declarations

EPD

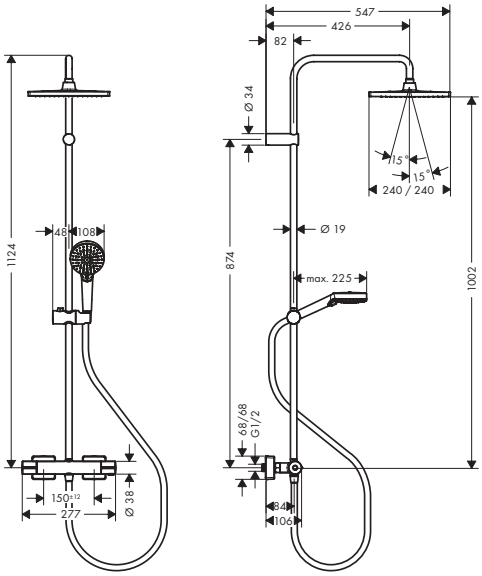

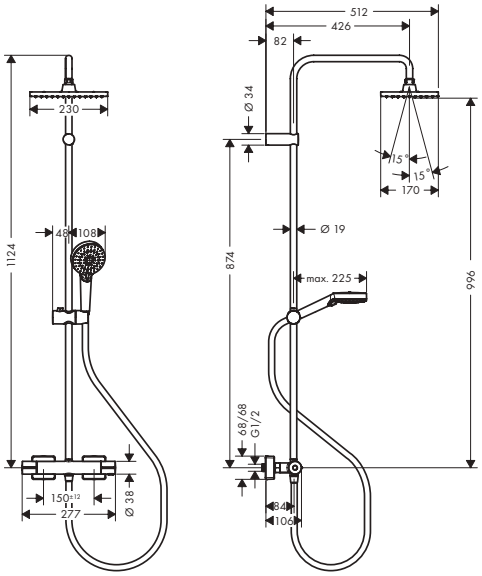

Overview variants

Shower head size	Number of sprays	Spray types	Max. flow rate at 3 bar (l/min)	Min. flow pressure (bar)	Finish	Code no.
240/240	1	Rain	6.9	1	Matt Black	26429670
240/240	1	Rain	15.8	1.3	Matt Black	26427670
230/170	1	Rain	5.7	1	Chrome	26319000
230	1	Rain	6.8	1	Chrome	26097000
					Matt Black	26097670
230/170	1	Rain	15.2	1	Chrome	26286000
					Matt Black	26286670

Measurements within scale drawings are in mm.
Technical specifications and units of measure are subject to change.

Vernis Shape Showerpipes 1jet with bath thermostat

Features of all variants

- consists of: overhead shower, hand shower, bath thermostat, shower hose, slider, shower bar
- spray type overhead shower: Rain
- spray type hand shower: Rain, IntenseRain
- maximum flow rate for Showerpipe at 3 bar: 20 l/min
- minimum flow pressure: 1 bar
- max. operating pressure: 10 bar
- ball-joint: overhead shower angle adjustable
- height-adjustable slider with locking push-button slider
- shower arm length overhead shower: 426 mm
- thermostat Vernis
- safety stop at 40 °C
- adjustable hot water limitation
- outlets controlled via turning handle
- suitable for continuous flow water heaters
- mounting type: exposed installation
- connection dimension: DN15
- connection thread: G ½
- centre distance: 150 ± 12 mm
- intrinsically safe against backflow
- shower bar diameter: 19 mm
- 3 functions

240/240

230/170

Sustainability

EcoSmart

Technologies

Quick Clean

XXL Performance

Spray types

Intense Rain

Rain

Certificates/declarations

EPD

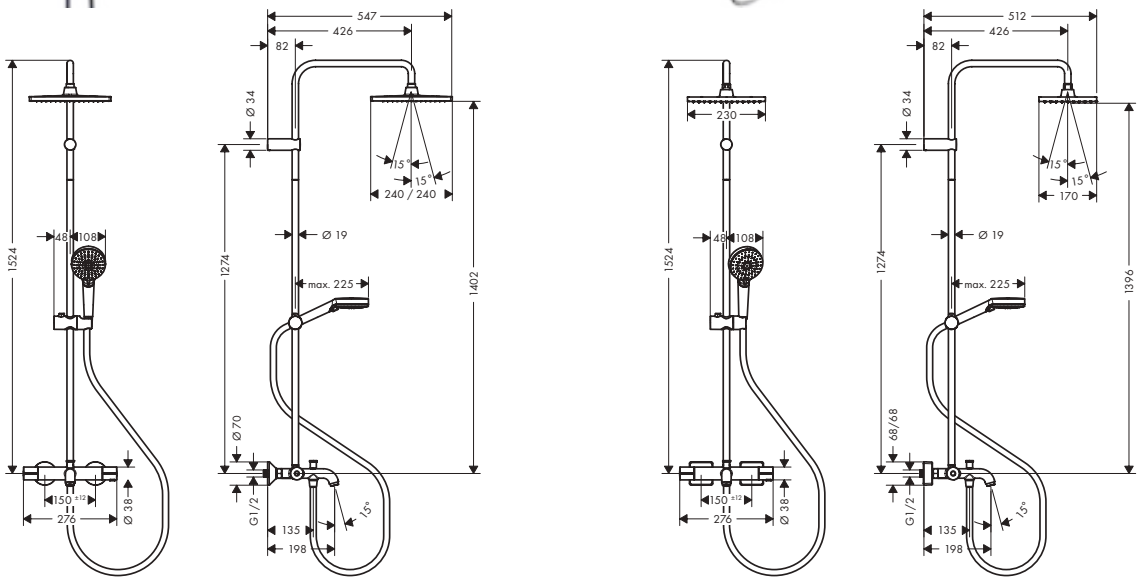

Overview variants

Shower head size	Number of sprays	Spray types	Min. flow pressure (bar)	flow rate of hand shower at 3 bar (l/min)	flow rate for overhead shower at 3 bar (l/min)	flow rate for bath spout at 3 bar (l/min)	Thermostat	Finish	Code no.
240/240	1	Rain	1	15.2	18.2	20	Vernis	Matt Black	26900670
230	1	Rain	1	6.9	9	20	Vernis	Chrome	26098000
230	1	Rain	1	15.2	12.4	20	Vernis	Chrome	26284000

Measurements within scale drawings are in mm.
Technical specifications and units of measure are subject to change.

Vernis Shape Showerpipes 1jet Reno

Features of all variants

- consists of: overhead shower, hand shower, shower hose, slider
- overhead shower Vernis Shape 230 1jet
- shower head size overhead shower: 230 x 170 mm
- spray type overhead shower: Rain
- spray type hand shower: Rain, IntenseRain
- max. operating pressure: 10 bar
- ball-joint: overhead shower angle adjustable
- mounting type: exposed installation
- shower bar diameter: 19 mm
- height-adjustable slider with locking push-button slider
- shower arm length: 400 mm
- water connection: Metaflex shower hose 80 cm and 160 cm
- connection dimension: DN15
- connection thread: G ½
- suitable for continuous flow water heaters

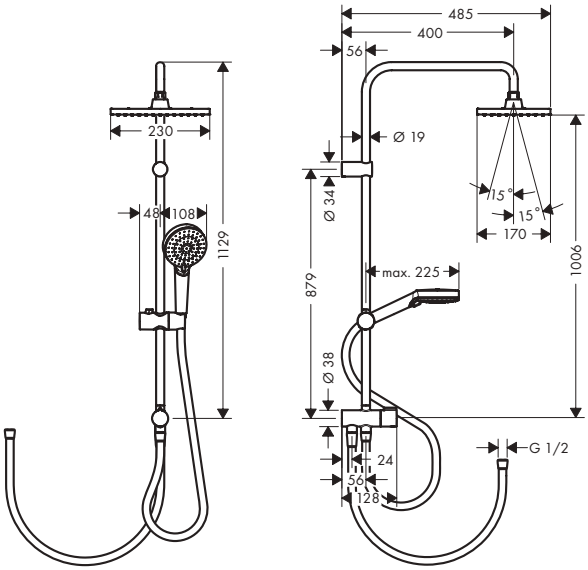

Sustainability

EcoSmart

Technologies

Quick Clean

XXL Performance

Spray types

Intense Rain

Rain

Overview variants

Shower head size	Number of sprays	Spray types	Max. flow rate at 3 bar (l/min)	Min. flow pressure (bar)	Finish	Code no.
230/170	1	Rain	6.8	0.8	Chrome	26289000
					Matt Black	26289670
230/170	1	Rain	15.2	1	Chrome	26282000
					Matt Black	26282670

Measurements within scale drawings are in mm.
Technical specifications and units of measure are subject to change.

Raindance Shower panel Lift 180 2jet for exposed installation

Features

- consists of: shower panel, overhead shower, baton hand shower, shower hose, shower holder
- overhead shower Raindance S 180 Air
- shower head size: 180 mm
- spray type overhead shower: RainAir, wide flood jet
- flow rate RainAir spray at 3 bar: 14 l/min
- flow rate RainFlow spray at 3 bar: 17 l/min
- spray type hand shower: RainAir
- maximum flow rate at 3 bar: 22 l/min
- shower arm length: 420 mm
- adjustable height: 200 mm
- minimum flow pressure: 2,2 bar
- scald protection at 40°
- adjustable hot water limitation
- isolated water conduction
- centre distance: 150 ± 12 mm
- connection thread: G ½
- site: wall
- mounting type: exposed installation
- suitable for continuous flow water heaters
- connection dimension: DN15
- max. operating pressure: 10 bar

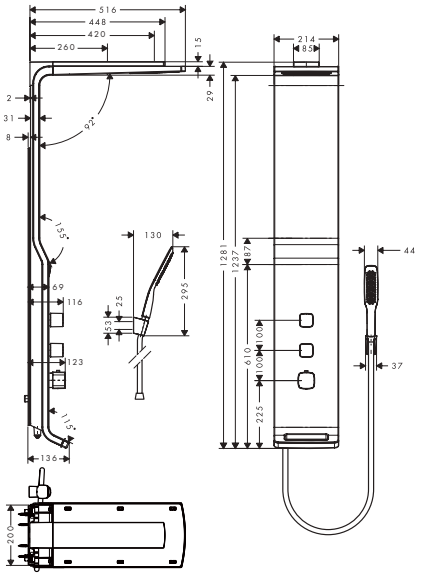

Technologies

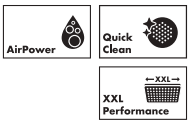

Spray types

Finish	Code no.
White/Chrome	27008400

Optional parts:		Code no.
	Raindance Corner fitting set for shower panel Lift 180 2jet for exposed installation	27999000

Measurements within scale drawings are in mm.
Technical specifications and units of measure are subject to change.

Drains

Drains

	RainDrain Flex		RainDrain Match	RainDrain Match Plus	RainDrain Rock
Finish					
Length (mm)	700 - 1600	700 - 1600	600 - 1200	800 - 1200	600 - 1200
Wall installation	–	■	■	–	–
Dryphon	■	■	■	■	■
QuickClean	–	–	–	–	–
Adjustable frame height	–	–	■	■	–
Resizeable cover length	■	■	–	–	■
from page	275	276	278	279	280

■ available depending on the model
– not available

	RainDrain Original	RainDrain Minimalistic
Finish		
Length (mm)	600 - 1200	700 - 1200
Wall installation	–	■
Dryphon	■	■
QuickClean	–	–
Adjustable frame height	–	–
Resizeable cover length	–	–
from page	282	283

	RainDrain Allround	RainDrain Compact			
Finish					
Length (mm)	700 - 1200	600 - 1200	600 - 1200	600 - 1200	600 - 1200
For standard installation	■	■	–	■	–
For flat installation	■	–	■	–	■
Dryphon	–	–	–	–	–
Easy to clean siphon	■	■	■	■	■
Adjustable frame height	–	–	–	–	–
Resizeable cover length	–	–	–	–	–
tileable on the rear	–	–	–	–	–
tileable	–	–	–	■	■
from page	284	285	286	287	287

■ available depending on the model
– not available

RainDrain Go

Finish	● ●
Length (mm)	500 - 1200
For standard installation	■
For flat installation	■
Dryphon	–
Easy to clean siphon	■
Adjustable frame height	–
Resizeable cover length	–
tileable on the rear	■
tileable	–
from page	288

	RainDrain Spot		RainDrain Spot Plus		RainDrain Brilliance
Finish	●	●	●	●	● ●
Length (mm)	150	150	150	150	100/150
tileable on the rear	–	■	–	■	■
Dryphon	–	–	–	–	–
Easy to clean siphon	■	■	■	■	■
Adjustable frame height	–	–	■	■	■
from page	289	289	290	290	291

■ available depending on the model
– not available

RainDrain Point

Finish		
Length (mm)	100/150	100/150
tileable on the rear	–	■
Dryphon	–	–
Easy to clean siphon	■	■
Adjustable frame height	–	–
from page	291	292

Technologies

Dryphon

The Dryphon system opens and closes with a flexible membrane. This membrane allows water to pass through with a high drainage capacity (60 l/min) when needed while blocking sewer gases when no water is flowing through.

Easy clean siphon

Modern odor trap with a high drainage capacity can be removed for cleaning, even after it has been securely installed in the flooring. Any remaining dirt or hair is easy to remove under running water.

High drainage capacity

Showering with a large overhead shower presents tough challenges for drainage. This high-performance siphon can reach high drainage capacity of up to 60 l/min to prevent flooding in the shower area and bathroom.

QuickClean

At some point, dirt and hair will build up in every shower drain. This high-quality linear drain is easy to clean: simply take off the cover using the tool provided and remove any residue in no time at all.

Installation

Resizeable cover length

Enhance your shower experience with our high-quality, adaptable shower drain. Crafted with a flexible design, that can be effortlessly adjusted to the right length on-site, ensuring a perfect fit for any shower area.

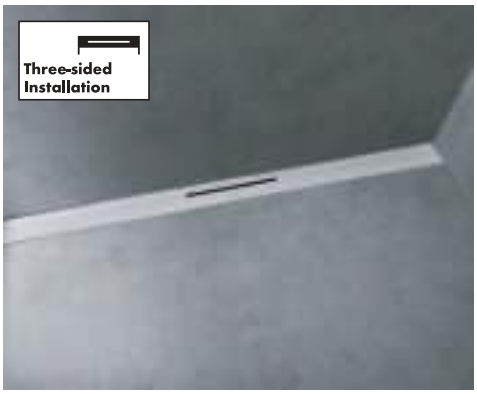

Three-sided installation

Installation against the wall and between the two side walls. This type of installation requires a one-sided slope and is at the same time the easiest to create while offering a high drainage capacity.

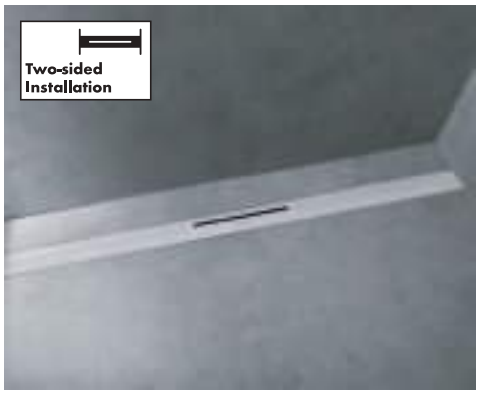

Two-sided installation

Installation between the walls, with floor tiles on either side of the shower drain. This type of installation requires a two-sided slope, which makes slope creation easy and effortless while offering high drainage performance.

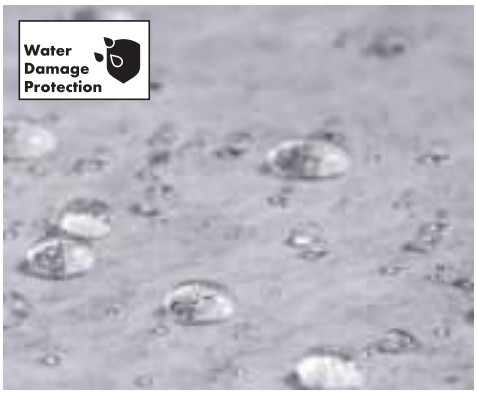

Water damage protection

Avoid water damage with a pre-assembled sealing membrane. It is 100% waterproof. This prevents any shower water from getting through the wall or floor for a reliable and safe showering experience.

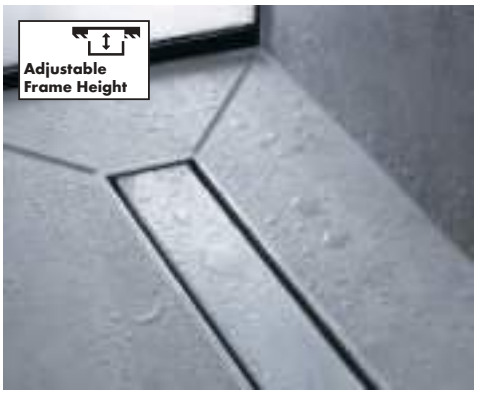

Adjustable frame height

The shower drain is installed flush with the tiles. The level of the grate can be adjusted to different heights by using the height adjustment frame (Tile thickness 7-18 mm) even after the screed has been poured.

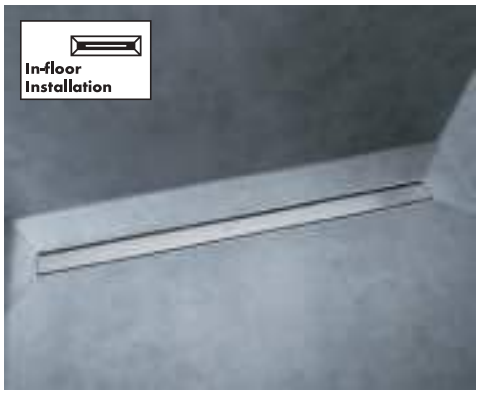

In-floor installation

This shower drain is a design highlight that can be placed free in the floor. This type of installation in the surface requires a four-sided slope and is placed at least 10 cm from all sides for perfect drainage.

Installation

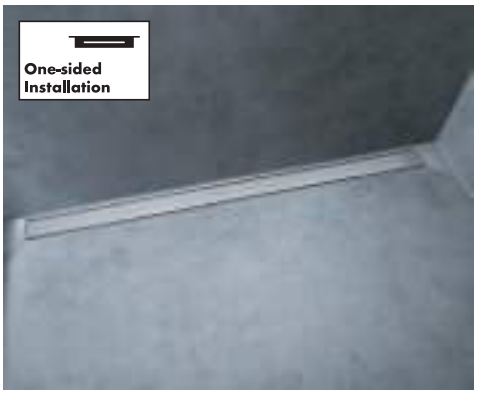

One-sided installation

Installation against the wall with tiles on the other three sides. This type of installation requires a three-sided slope with at least 10 cm from the left and right wall for perfect drainage of the water.

Finish

Black

-610

Brushed Black Chrome

-340

Brushed Bronze

-140

Brushed Stainless Steel

-800

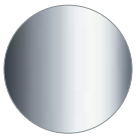

Chrome

-000

Matt Black

-670

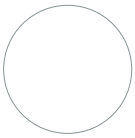

Matt White

-700

Polished Gold Optic

-990

RainDrain Flex Finish sets shower drains cuttable

Features of all variants

- consists of: design grate with removable cover, Dryphon
- mounting type: two-sided
- can be shortened on site
- easy to clean surface
- height adjustable by 10 mm
- up to 60 l/min drainage capacity
- where to use: new construction, renovation
- grate removal tool allows easy removal of the finish set
- with integrated slope
- type of odour seal: mechanical
- Dryphon enables waterless siphon system
- minimal installation height: 67 mm (flat uBox), 102 mm (standard uBox)
- grate material: Stainless Steel 304 (1.4301)
- suitable for primary drainage

700 - 1200

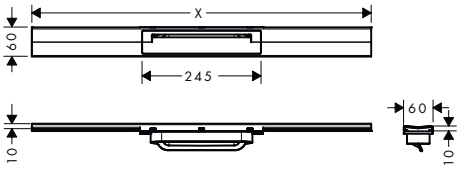

Technologies

Installation

Overview variants

Length (mm)	Finish	Code no.
700	Brushed Stainless Steel	56043800
	Matt Black	56043670
	Matt White	56043700
	Chrome	56043000
	Brushed Bronze	56043140
	Brushed Black Chrome	56043340
	Polished Gold Optic	56043990
800	Brushed Stainless Steel	56044800
	Matt Black	56044670
	Matt White	56044700
	Chrome	56044000
	Brushed Bronze	56044140
	Brushed Black Chrome	56044340
	Polished Gold Optic	56044990
900	Brushed Stainless Steel	56045800
	Matt Black	56045670
	Matt White	56045700
	Chrome	56045000
	Brushed Bronze	56045140
	Brushed Black Chrome	56045340
	Polished Gold Optic	56045990
1000	Brushed Stainless Steel	56046800
	Matt Black	56046670
	Matt White	56046700
	Chrome	56046000
	Brushed Bronze	56046140
	Brushed Black Chrome	56046340
	Polished Gold Optic	56046990

For more information about this product, please see the next page.

RainDrain Flex Finish sets shower drains cuttable

Overview variants

	Length (mm)	Finish	Code no.
	1200	Brushed Stainless Steel	56047800
		Matt Black	56047670
		Matt White	56047700
		Chrome	56047000
		Brushed Bronze	56047140
		Brushed Black Chrome	56047340
		Polished Gold Optic	56047990
	1600	Brushed Stainless Steel	56261800

Required parts (choose one):		Code no.
	uBox universal Base set for finish sets for standard installation	01001180
	uBox universal Base set for finish sets for flat installation	01000180
	uBox universal Base set for finish sets for vertical installation	01002180

Optional parts:		Code no.
	Soundproofing mat	94636000

RainDrain Flex Finish sets shower drains cuttable for wall mounting

Features of all variants

- consists of: design grate with removable cover, Dryphon, sealing membrane
- mounting type: wall-mounted
- can be shortened on site
- easy to clean surface
- height adjustable by 10 mm
- up to 60 l/min drainage capacity
- where to use: new construction, renovation
- grate removal tool allows easy removal of the finish set
- with integrated slope
- type of odour seal: mechanical
- Dryphon enables waterless siphon system
- minimal installation height: 67 mm (flat uBox), 102 mm (standard uBox)
- grate material: Stainless Steel 304 (1.4301)
- suitable for primary drainage

700 - 1200

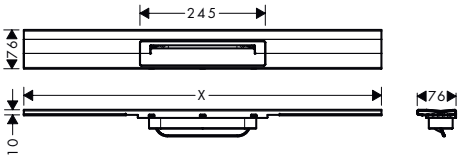

Technologies

Installation

Overview variants

	Length (mm)	Finish	Code no.
	700	Brushed Stainless Steel	56050800
		Matt Black	56050670
		Matt White	56050700
		Chrome	56050000
		Brushed Bronze	56050140
		Brushed Black Chrome	56050340
		Polished Gold Optic	56050990

Measurements within scale drawings are in mm.
Technical specifications and units of measure are subject to change.

RainDrain Flex Finish sets shower drains cuttable for wall mounting

Overview variants

Length (mm)	Finish	Code no.
800	Brushed Stainless Steel	56051800
	Matt Black	56051670
	Matt White	56051700
	Chrome	56051000
	Brushed Bronze	56051140
	Brushed Black Chrome	56051340
	Polished Gold Optic	56051990
900	Brushed Stainless Steel	56052800
	Matt Black	56052670
	Matt White	56052700
	Chrome	56052000
	Brushed Bronze	56052140
	Brushed Black Chrome	56052340
	Polished Gold Optic	56052990
1000	Brushed Stainless Steel	56053800
	Matt Black	56053670
	Matt White	56053700
	Chrome	56053000
	Brushed Bronze	56053140
	Brushed Black Chrome	56053340
	Polished Gold Optic	56053990
1200	Brushed Stainless Steel	56054800
	Matt Black	56054670
	Matt White	56054700
	Chrome	56054000
	Brushed Bronze	56054140
	Brushed Black Chrome	56054340
	Polished Gold Optic	56054990
1600	Brushed Stainless Steel	56262800

Required parts (choose one):		Code no.
	uBox universal Base set for finish sets for standard installation	01001180
	uBox universal Base set for finish sets for flat installation	01000180
	uBox universal Base set for finish sets for vertical installation	01002180

Optional parts:		Code no.
	Soundproofing mat	94636000

RainDrain Match Finish sets shower drains with height adjustable frame

Features of all variants

- consists of: design grate, height adjustable frame, wall installation flange, Dryphon
- mounting type: wall-mounted, free in the floor
- tileable on the back side
- easy to clean surface
- easy adjustment to tile thickness with height adjustable frame (7 – 18 mm)
- tile thickness: up to 18 mm
- suitable for any type of tile
- up to 60 l/min drainage capacity
- where to use: new construction, renovation
- grate removal tool allows easy removal of the finish set
- type of odour seal: mechanical
- Dryphon enables waterless siphon system
- minimal installation height: 84 mm (flat uBox), 102 mm (standard uBox)
- wall mounting possible
- tile inlay depth: 12 mm
- grate material: Stainless Steel 304 (1.4301)
- suitable for primary and secondary drainage
- frame width: 62 mm
- third party controlled acc. DIN EN 1253-3

600 - 1200

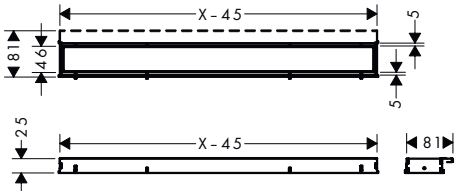

Technologies

Installation

Overview variants

	Length (mm)	Finish	Code no.
	600	Brushed Stainless Steel	56036800
		Matt Black	56036670
		Matt White	56036700
	700	Brushed Stainless Steel	56037800
		Matt Black	56037670
		Matt White	56037700
	800	Brushed Stainless Steel	56038800
		Matt Black	56038670
		Matt White	56038700
		Chrome	56038000
	900	Brushed Stainless Steel	56040800
		Matt Black	56040670
		Matt White	56040700
		Black	56040610
	1000	Brushed Stainless Steel	56041800
		Matt Black	56041670
		Matt White	56041700
	1200	Brushed Stainless Steel	56042800
		Matt Black	56042670
		Matt White	56042700

56040610 No tileable rear cover.

Required parts (choose one):	For	Code no.
uBox universal Complete set for standard installation - 600 for shower drains finish sets	56036XXX	56022180
uBox universal Complete set for flat installation - 600 for shower drains finish sets	56036XXX	56016180
uBox universal Complete set for standard installation - 700 for shower drains finish sets	56037XXX	56023180
uBox universal Complete set for flat installation - 700 for shower drains finish sets	56037XXX	56017180
uBox universal Complete set for standard installation - 800 for shower drains finish sets	56038XXX	56024180

Measurements within scale drawings are in mm.
Technical specifications and units of measure are subject to change.

RainDrain Match Finish sets shower drains with height adjustable frame

Required parts (choose one):	For	Code no.
uBox universal Complete set for flat installation - 800 for shower drains finish sets	56038XXX	56018180
uBox universal Complete set for standard installation - 900 for shower drains finish sets	56040XXX	56025180
uBox universal Complete set for flat installation - 900 for shower drains finish sets	56040XXX	56019180
uBox universal Complete set for standard installation - 1000 for shower drains finish sets	56041XXX	56026180
uBox universal Complete set for flat installation - 1000 for shower drains finish sets	56041XXX	56020180
uBox universal Complete set for standard installation - 1200 for shower drains finish sets	56042XXX	56027180
uBox universal Complete set for flat installation - 1200 for shower drains finish sets	56042XXX	56021180

Optional parts:	Code no.
Soundproofing mat	94636000

RainDrain Match Plus Finish sets shower drains with height adjustable frame

Features of all variants

- consists of: design grate, height adjustable frame, Dryphon
- mounting type: free in the floor
- easy to clean surface
- easy adjustment to tile thickness with height adjustable frame (7 – 18 mm)
- tile thickness: up to 18 mm
- suitable for any type of tile
- up to 60 l/min drainage capacity
- where to use: new construction, renovation
- grate removal tool allows easy removal of the finish set
- type of odour seal: mechanical
- Dryphon enables waterless siphon system
- minimal installation height: 84 mm (flat uBox), 102 mm (standard uBox)
- grate material: Stainless Steel 304 (1.4301)
- suitable for primary and secondary drainage
- frame width: 62 mm

800 - 1200

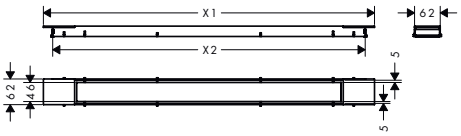

Technologies

Installation

Overview variants

	Length (mm)	Finish	Code no.
	800	Matt Black	56215670
		Matt White	56215700
		Brushed Stainless Steel	56215800
	900	Matt Black	56216670
		Matt White	56216700
		Brushed Stainless Steel	56216800
	1000	Matt Black	56217670
		Matt White	56217700
		Brushed Stainless Steel	56217800

For more information about this product, please see the next page.

Measurements within scale drawings are in mm.
Technical specifications and units of measure are subject to change.

RainDrain Match Plus Finish sets shower drains with height adjustable frame

Overview variants

Length (mm)	Finish	Code no.
1200	Matt Black	56218670
	Matt White	56218700
	Brushed Stainless Steel	56218800

Required parts (choose one):	For	Code no.
uBox universal Complete set for standard installation - 800 for shower drains finish sets	56215XXX	56024180
uBox universal Complete set for flat installation - 800 for shower drains finish sets	56215XXX	56018180
uBox universal Complete set for standard installation - 900 for shower drains finish sets	56216XXX	56025180
uBox universal Complete set for flat installation - 900 for shower drains finish sets	56216XXX	56019180
uBox universal Complete set for standard installation - 1000 for shower drains finish sets	56217XXX	56026180
uBox universal Complete set for flat installation - 1000 for shower drains finish sets	56217XXX	56020180
uBox universal Complete set for standard installation - 1200 for shower drains finish sets	56218XXX	56027180
uBox universal Complete set for flat installation - 1200 for shower drains finish sets	56218XXX	56021180

Optional parts:	Code no.
Soundproofing mat	94636000

RainDrain Rock Finish sets shower drains cuttable and tileable

Features of all variants

- consists of: tileable grate, grate removal tool, Dryphon
- mounting type: free in the floor, two-sided
- can be shortened on site
- frameless design
- height adjustable grate
- tile thickness: up to 40 mm
- suitable for every type of tile and tile thickness
- up to 60 l/min drainage capacity
- where to use: new construction, renovation
- grate removal tool allows easy removal of the finish set
- easy to clean
- type of odour seal: mechanical
- Dryphon enables waterless siphon system
- minimal installation height: 77 mm (flat uBox), 95 mm (standard installation)
- 50 mm excess length on both sides which can be shortened
- grate material: Stainless Steel 304 (1.4301)
- suitable for primary drainage
- third party controlled acc. DIN EN 1253-3

600

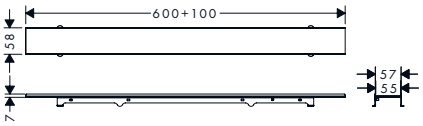

700

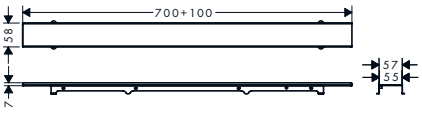

800

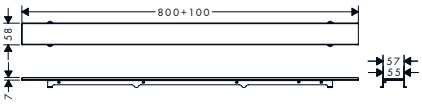

Technologies

Installation

Measurements within scale drawings are in mm.
Technical specifications and units of measure are subject to change.

RainDrain Rock Finish sets shower drains cuttable and tileable

Overview variants

	Length (mm)	Code no.
	600	56029000
	700	56030000
	800	56031000

Required parts (choose one):		For	Code no.
	uBox universal Complete set for standard installation - 600 for shower drains finish sets	56029XXX	56022180
	uBox universal Complete set for flat installation - 600 for shower drains finish sets	56029XXX	56016180
	uBox universal Complete set for standard installation - 700 for shower drains finish sets	56030XXX	56023180
	uBox universal Complete set for flat installation - 700 for shower drains finish sets	56030XXX	56017180
	uBox universal Complete set for standard installation - 800 for shower drains finish sets	56031XXX	56024180
	uBox universal Complete set for flat installation - 800 for shower drains finish sets	56031XXX	56018180

Optional parts:		Code no.
	Soundproofing mat	94636000

RainDrain Rock Finish sets shower drains cuttable and tileable

Features of all variants

- consists of: tileable grate, grate removal tool, Dryphon
- mounting type: free in the floor, two-sided
- can be shortened on site
- frameless design
- height adjustable grate
- tile thickness: up to 40 mm
- suitable for every type of tile and tile thickness
- up to 60 l/min drainage capacity
- where to use: new construction, renovation
- grate removal tool allows easy removal of the finish set
- easy to clean
- type of odour seal: mechanical
- Dryphon enables waterless siphon system
- minimal installation height: 77 mm (flat uBox), 95 mm (standard installation)
- 50 mm excess length on both sides which can be shortened
- grate material: Stainless Steel 304 (1.4301)
- suitable for primary drainage
- third party controlled acc. DIN EN 1253-3

900

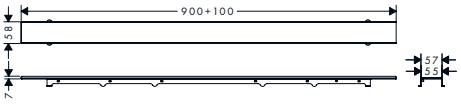

1000

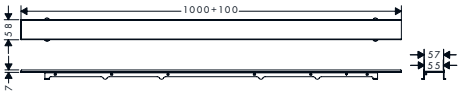

1200

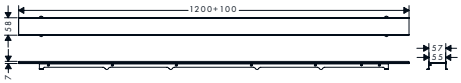

Technologies

Installation

Overview variants

	Length (mm)	Code no.
	900	56032000
	1000	56033000
	1200	56034000

For more information about this product, please see the next page.

RainDrain Rock Finish sets shower drains cuttable and tileable

Required parts (choose one):	For	Code no.
uBox universal Complete set for standard installation - 900 for shower drains finish sets	56032XXX	56025180
uBox universal Complete set for flat installation - 900 for shower drains finish sets	56032XXX	56019180
uBox universal Complete set for standard installation - 1000 for shower drains finish sets	56033XXX	56026180
uBox universal Complete set for flat installation - 1000 for shower drains finish sets	56033XXX	56020180
uBox universal Complete set for standard installation - 1200 for shower drains finish sets	56034XXX	56027180
uBox universal Complete set for flat installation - 1200 for shower drains finish sets	56034XXX	56021180

Optional parts:	Code no.
Soundproofing mat	94636000

RainDrain Original Finish sets shower drains

Features of all variants

- consists of: finish set shower drain, installation set, Dryphon, sealing membrane, grate removal tool
- mounting type: free in the floor
- frameless design
- easy to clean surface
- height adjustable by 10 mm
- tile thickness: up to 18 mm
- up to 49 l/min drainage capacity
- where to use: renovation, new construction
- grate removal tool allows easy removal of the finish set
- type of odour seal: mechanical
- Dryphon enables waterless siphon system
- installation on the screed
- grate material: Stainless Steel 304 (1.4301)

600 - 1200

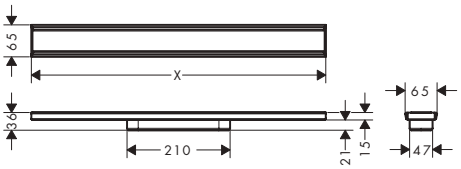

Technologies

Dryphon

Quick Clean

Installation

In-floor Installation

Overview variants

Length (mm)	Finish	Code no.
600	Brushed Stainless Steel	56196800
700	Brushed Stainless Steel	56197800
800	Brushed Stainless Steel	56198800
900	Brushed Stainless Steel	56199800
1000	Brushed Stainless Steel	56200800
1200	Brushed Stainless Steel	56201800

Required parts (choose one):	Code no.
uBox universal Base set for finish sets for standard installation	01001180
uBox universal Base set for finish sets for flat installation	01000180
uBox universal Base set for finish sets for vertical installation	01002180

Measurements within scale drawings are in mm.
Technical specifications and units of measure are subject to change.

RainDrain Original Finish sets shower drains

Optional parts:	Code no.
Soundproofing mat	94636000

RainDrain Minimalistic Finish sets shower drains

Features of all variants

- consists of: tileable grate, Dryphon, sealing membrane, grate removal tool
- mounting type: wall-mounted
- easy to clean surface
- height adjustable by 10 mm
- tile thickness: 11 - 21 mm
- where to use: new construction, renovation
- grate removal tool allows easy removal of the finish set
- easy to clean
- type of odour seal: mechanical
- Dryphon enables waterless siphon system
- minimal installation height: 72 mm (flat uBox), 90 mm (standard uBox)
- tile inlay depth: 12 mm
- grate material: Stainless Steel 304 (1.4301)
- suitable for primary drainage

700 - 1200

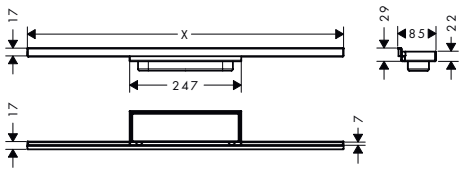

Technologies

Installation

Overview variants

Length (mm)	Code no.
700	56219000
800	56220000
900	56221000
1000	56222000
1200	56223000

Required parts (choose one):	Code no.
uBox universal Base set for finish sets for standard installation	01001180
uBox universal Base set for finish sets for flat installation	01000180
uBox universal Base set for finish sets for vertical installation	01002180

Optional parts:	Code no.
Soundproofing mat	94636000

Measurements within scale drawings are in mm.
Technical specifications and units of measure are subject to change.

RainDrain Allround Complete sets shower drains

Features of all variants

- consists of: finish set shower drain, installation set, pre-assembled sealing membrane, grate removal tool, Siphons
- grate material: Stainless Steel 304 (1.4301)
- sealing membrane in 1300 x 1500 mm for complete sealing of the whole wet area
- connection diameter: DN40, DN50
- direction of outlet: horizontal
- easy to clean surface
- height adjustable installation set
- drainage capacity flat installation: up to 32 l/min
- drainage capacity standard installation: up to 33 l/min
- where to use: new construction, renovation
- tile thickness: up to 18 mm
- rotatable and adjustable siphon body
- easy to clean siphon
- grate removal tool allows easy removal of the finish set
- with removable hair strainer
- type of odour seal: fluid
- mounting type: free in the floor
- choice of two different siphons, for standard or flat installation
- suitable for primary drainage
- minimal installation height: 66 mm (flat installation), 95 mm (standard installation)
- third party controlled acc. DIN EN 1253-3

700 - 1200

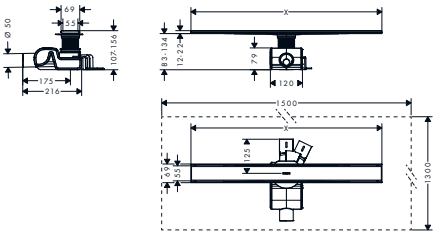

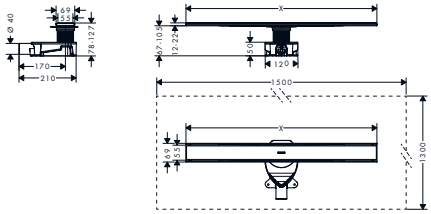

Technologies

Installation

Overview variants

	Length (mm)	Finish	Code no.
	700	Brushed Stainless Steel	56186800
	800	Brushed Stainless Steel	56187800
	900	Brushed Stainless Steel	56188800
	1000	Brushed Stainless Steel	56189800
	1200	Brushed Stainless Steel	56190800

Optional parts:		Code no.
	Soundproofing mat	94636000

Measurements within scale drawings are in mm.
Technical specifications and units of measure are subject to change.

RainDrain Compact Complete sets shower drains for standard installation

Features of all variants

- consists of: finish set shower drain, installation set, trap, grate removal tool, pre-assembled sealing membrane
- grate material: Stainless Steel 304 (1.4301)
- material installation set: Stainless Steel 304 (1.4301)
- pre-assembled sealing membrane
- water seal: 50 mm
- connection diameter: DN50
- direction of outlet: horizontal
- easy to clean surface
- height adjustable installation set
- where to use: renovation, new construction
- tile thickness: up to 18 mm
- removable water seal
- easy to clean siphon
- grate removal tool allows easy removal of the finish set
- type of odour seal: fluid
- material siphon: ABS
- mounting type: free in the floor
- suitable for primary drainage
- minimal installation height: 63 mm

600 - 1200

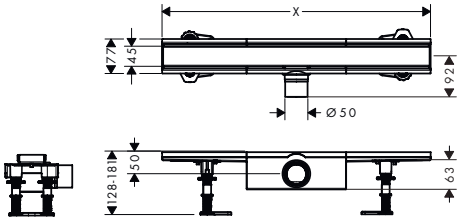

Technologies

Installation

Overview variants

	Length (mm)	Finish	Code no.
	600	Brushed Stainless Steel	56174800
	700	Brushed Stainless Steel	56176800
	800	Brushed Stainless Steel	56178800
	900	Brushed Stainless Steel	56180800
	1000	Brushed Stainless Steel	56182800
	1200	Brushed Stainless Steel	56184800

Optional parts:		Code no.
	Soundproofing mat	94636000

Measurements within scale drawings are in mm.
Technical specifications and units of measure are subject to change.

RainDrain Compact Complete sets shower drains for flat installation

Features of all variants

- consists of: finish set shower drain, installation set, trap, grate removal tool, pre-assembled sealing membrane
- grate material: Stainless Steel 304 (1.4301)
- material installation set: Stainless Steel 304 (1.4301)
- pre-assembled sealing membrane
- water seal: 30 mm
- connection diameter: DN40
- direction of outlet: horizontal
- easy to clean surface
- height adjustable installation set
- up to 27 l/min drainage capacity
- where to use: renovation, new construction
- tile thickness: up to 18 mm
- removable water seal
- easy to clean siphon
- grate removal tool allows easy removal of the finish set
- type of odour seal: fluid
- minimal construction height 43 mm
- material siphon: ABS
- mounting type: free in the floor
- suitable for primary drainage
- minimal installation height: 63 mm

600 - 1200

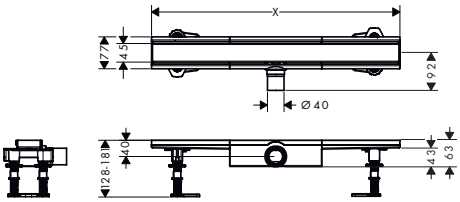

Technologies

Installation

Overview variants

	Length (mm)	Finish	Code no.
	600	Brushed Stainless Steel	56162800
	700	Brushed Stainless Steel	56164800
	800	Brushed Stainless Steel	56166800
	900	Brushed Stainless Steel	56168800
	1000	Brushed Stainless Steel	56170800
	1200	Brushed Stainless Steel	56172800

Optional parts:		Code no.
	Soundproofing mat	94636000

Measurements within scale drawings are in mm.
Technical specifications and units of measure are subject to change.

RainDrain Compact Complete sets shower drains tileable for standard installation

Features of all variants

- consists of: tileable grate, installation set, trap, grate removal tool, pre-assembled sealing membrane
- grate material: Stainless Steel 304 (1.4301)
- material installation set: Stainless Steel 304 (1.4301)
- pre-assembled sealing membrane
- water seal: 50 mm
- connection diameter: DN50
- direction of outlet: horizontal
- easy to clean surface
- height adjustable installation set
- up to 37 l/min drainage capacity
- where to use: renovation, new construction
- tile thickness: up to 18 mm
- removable water seal
- easy to clean siphon
- grate removal tool allows easy removal of the finish set
- type of odour seal: fluid
- material siphon: ABS
- mounting type: free in the floor
- tileable
- suitable for primary drainage
- minimal installation height: 63 mm

600 - 1200

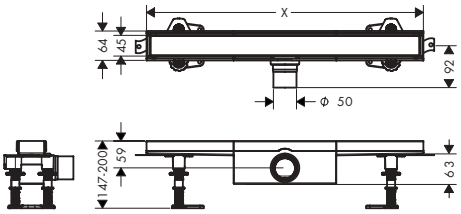

Technologies

Installation

Overview variants

	Length (mm)	Code no.
	600	56175000
	700	56177000
	800	56179000
	900	56181000
	1000	56183000
	1200	56185000

Optional parts:		Code no.
	Soundproofing mat	94636000

RainDrain Compact Complete sets shower drains tileable for flat installation

Features of all variants

- consists of: tileable grate, installation set, trap, grate removal tool, pre-assembled sealing membrane
- grate material: Stainless Steel 304 (1.4301)
- material installation set: Stainless Steel 304 (1.4301)
- pre-assembled sealing membrane
- water seal: 30 mm
- connection diameter: DN40
- direction of outlet: horizontal
- easy to clean surface
- height adjustable installation set
- up to 27 l/min drainage capacity
- where to use: renovation, new construction
- tile thickness: up to 18 mm
- removable water seal
- easy to clean siphon
- grate removal tool allows easy removal of the finish set
- type of odour seal: fluid
- minimal construction height 43 mm
- material siphon: ABS
- mounting type: free in the floor
- tileable
- tile inlay depth: 12 mm
- suitable for primary drainage
- minimal installation height: 63 mm

600 - 1200

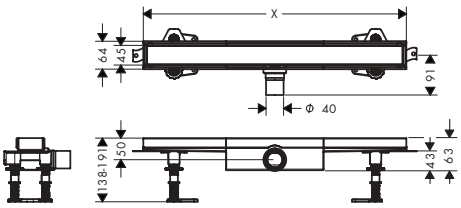

Technologies

Installation

For more information about this product, please see the next page.

RainDrain Compact Complete sets shower drains tileable for flat installation

Overview variants

Length (mm)	Code no.
600	56163000
700	56165000
800	56167000
900	56169000
1000	56171000
1200	56173000

Optional parts:		Code no.
	Soundproofing mat	94636000

RainDrain Go Complete sets shower drains

Features of all variants

- consists of: finish set shower drain, Siphons, installation set, pre-assembled sealing membrane, grate removal tool, hair catcher
- grate material: Stainless Steel 304 (1.4301)
- material installation set: Stainless Steel 304 (1.4301)
- pre-assembled sealing membrane
- water seal: 30 mm, 50 mm
- connection diameter: DN40, DN50
- direction of outlet: horizontal
- easy to clean surface
- height adjustable by 10 mm
- drainage capacity flat installation: up to 31 l/min
- drainage capacity standard installation: up to 39 l/min
- where to use: new construction, renovation
- tile thickness: up to 11 mm
- rotatable and adjustable siphon body
- easy to clean siphon
- grate removal tool allows easy removal of the finish set
- material siphon: ABS
- mounting type: free in the floor
- tileable on the back side
- tile inlay depth: 12 mm
- choice of two different siphons, for standard or flat installation
- suitable for primary and secondary drainage

500 - 1200

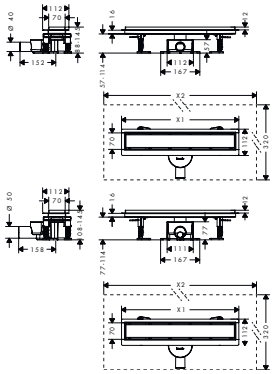

Technologies

Installation

Overview variants

Length (mm)	Finish	Code no.
500	Matt Black	56270670
	Brushed Stainless Steel	56270800
600	Matt Black	56271670
	Brushed Stainless Steel	56271800
700	Matt Black	56272670
	Brushed Stainless Steel	56272800
800	Matt Black	56273670
	Brushed Stainless Steel	56273800
900	Matt Black	56274670
	Brushed Stainless Steel	56274800
1000	Matt Black	56275670
	Brushed Stainless Steel	56275800
1200	Matt Black	56276670
	Brushed Stainless Steel	56276800

Measurements within scale drawings are in mm.
Technical specifications and units of measure are subject to change.

RainDrain Spot Complete set point drain 150/150

Features

- consists of: design grate, basic set, trap, pre-assembled sealing membrane, screed protection cover
- grate material: Stainless Steel 304 (1.4301)
- pre-assembled sealing membrane
- water seal: 50 mm
- connection diameter: DN50
- direction of outlet: pre-assembled horizontally, can be used vertically
- easy to clean surface
- height adjustable by 10 mm
- up to 35 l/min drainage capacity
- where to use: new construction, renovation
- removable water seal
- rotatable and adjustable siphon body
- easy to clean siphon
- type of odour seal: fluid
- minimal construction height 80 mm
- material siphon: ABS
- mounting type: free in the floor

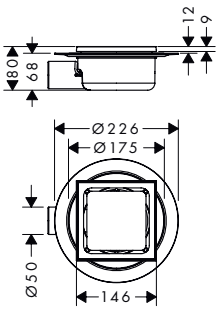

Technologies

Finish	Code no.
Brushed Stainless Steel	56055800

Optional parts:		Code no.
	RainDrain Spot Height compensation piece	56056000
	Fire protection adapter (HT PP socket DN 50)	94343000
	Soundproofing mat	94636000

RainDrain Spot Complete set point drain 150/150 tileable rear cover

Features

- consists of: design grate, basic set, trap, pre-assembled sealing membrane, screed protection cover
- grate material: Stainless Steel 304 (1.4301)
- pre-assembled sealing membrane
- water seal: 50 mm
- connection diameter: DN40
- direction of outlet: pre-assembled horizontally, can be used vertically
- easy to clean surface
- height adjustable by 10 mm
- up to 35 l/min drainage capacity
- where to use: new construction, renovation
- removable water seal
- rotatable and adjustable siphon body
- easy to clean siphon
- type of odour seal: fluid
- minimal construction height 95 mm
- material siphon: ABS
- mounting type: free in the floor
- tileable on the back side
- tile inlay depth: 12 mm

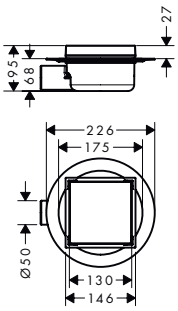

Technologies

Installation

Finish	Code no.
Brushed Stainless Steel	56112800

Optional parts:		Code no.
	RainDrain Spot Height compensation piece	56056000
	Fire protection adapter (HT PP socket DN 50)	94343000
	Soundproofing mat	94636000

Measurements within scale drawings are in mm.
Technical specifications and units of measure are subject to change.

RainDrain Spot Height compensation piece

Features

- material: plastic
- suitable for all RainDrain Spot point drains
- diameter of connection to RainDrain Spot pipework set: 128 mm
- diameter of connection to RainDrain Spot finish set: 146 mm
- for height compensation up to 75 mm

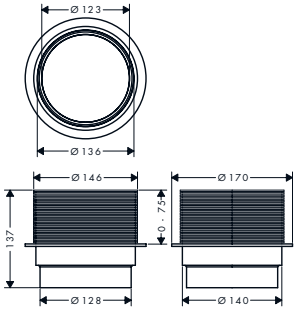

Code no.
56056000

RainDrain Spot Plus Complete set point drain 150/150 with height adjustable frame

Features

- consists of: design grate, basic set, trap, pre-assembled sealing membrane, screed protection cover
- grate material: Stainless Steel 304 (1.4301)
- pre-assembled sealing membrane
- water seal: 50 mm
- connection diameter: DN40
- direction of outlet: pre-assembled horizontally, can be used vertically
- easy to clean surface
- height adjustable by 10 mm
- up to 35 l/min drainage capacity
- where to use: new construction, renovation
- removable water seal
- rotatable and adjustable siphon body
- easy to clean siphon
- type of odour seal: fluid
- minimal construction height 80 mm
- material siphon: ABS
- mounting type: free in the floor

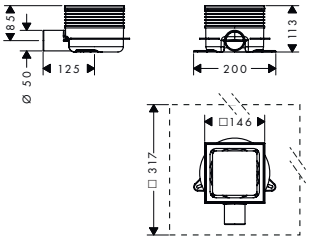

Technologies

Easy Clean Siphon
Quick Clean

Installation

Adjustable Frame Height

Finish	Code no.
Brushed Stainless Steel	56225800

RainDrain Spot Plus Complete set point drain 150/150 with height adjustable frame and tileable rear cover

Features

- consists of: design grate, basic set, trap, pre-assembled sealing membrane, screed protection cover
- grate material: Stainless Steel 304 (1.4301)
- pre-assembled sealing membrane
- water seal: 50 mm
- connection diameter: DN40
- direction of outlet: pre-assembled horizontally, can be used vertically
- easy to clean surface
- height adjustable by 10 mm
- up to 35 l/min drainage capacity
- where to use: new construction, renovation
- removable water seal
- rotatable and adjustable siphon body
- easy to clean siphon
- type of odour seal: fluid
- minimal construction height 95 mm
- material siphon: ABS
- mounting type: free in the floor
- tileable on the back side
- tile inlay depth: 12 mm

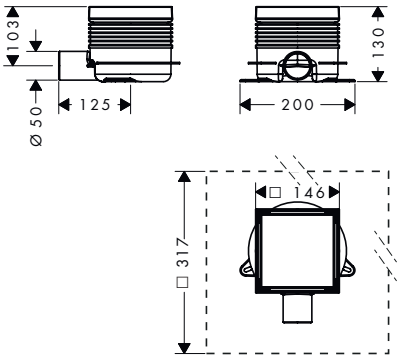

Technologies

Easy Clean Siphon
Quick Clean

Installation

Adjustable Frame Height
In-floor Installation

Finish	Code no.
Brushed Stainless Steel	56226800

Measurements within scale drawings are in mm.
Technical specifications and units of measure are subject to change.

RainDrain Brilliance Complete sets point drain

Features of all variants

- consists of: point drain, installation set, basic set, pre-assembled sealing membrane, grate removal tool, trap, screed protection cover
- grate material: Stainless Steel 304 (1.4301)
- pre-assembled sealing membrane
- water seal: up to max. 50 mm
- connection diameter: DN40
- direction of outlet: horizontal
- easy to clean surface
- easy adjustment to tile thickness with height adjustable frame (7 – 18 mm)
- where to use: new construction, renovation
- removable water seal
- rotatable and adjustable siphon body
- easy to clean siphon
- grate removal tool allows easy removal of the finish set
- with removable hair strainer
- type of odour seal: fluid
- minimal construction height 76 mm
- material siphon: ABS
- mounting type: free in the floor
- tileable on the back side
- simplified installation due to the cutable siphon
- tile inlay depth: 12 mm
- suitable for primary and secondary drainage
- third party controlled acc. DIN EN 1253-3

100/100

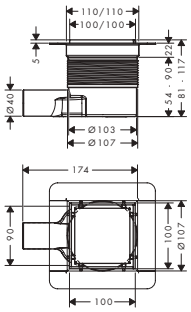

150/150

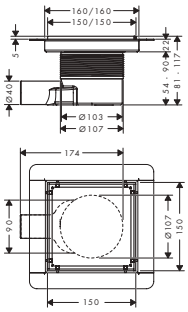

Technologies

Installation

Overview variants

drainage capacity	Product dimensions (mm)	Finish	Code no.
35	100/100	Matt Black	56250670
		Brushed Stainless Steel	56250800
up to 41 l/min	150/150	Matt Black	56251670
		Brushed Stainless Steel	56251800

Optional parts:	Code no.
Soundproofing mat	94636000

RainDrain Point Complete sets point drain

Features of all variants

- consists of: point drain, installation set, pre-assembled sealing membrane, basic set, trap, screed protection cover
- grate material: Stainless Steel 304 (1.4301)
- pre-assembled sealing membrane
- water seal: up to max. 50 mm
- connection diameter: DN40
- direction of outlet: horizontal
- easy to clean surface
- height adjustable by 10 mm
- where to use: new construction, renovation
- tile thickness: up to 18 mm
- removable water seal
- rotatable and adjustable siphon body
- easy to clean siphon
- grate removal tool allows easy removal of the finish set
- with removable hair strainer
- type of odour seal: fluid
- minimal construction height 54 mm
- material siphon: ABS
- mounting type: free in the floor
- simplified installation due to the cutable siphon
- suitable for primary drainage
- third party controlled acc. DIN EN 1253-3

100/100

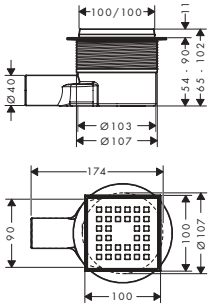

150/150

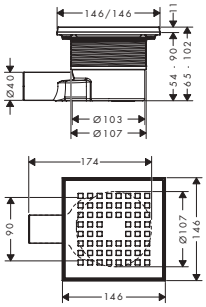

Technologies

Installation

Overview variants

drainage capacity	Product dimensions (mm)	Finish	Code no.
up to 41 l/min	100/100	Brushed Stainless Steel	56246800

For more information about this product, please see the next page.

Measurements within scale drawings are in mm.
Technical specifications and units of measure are subject to change.

RainDrain Point Complete sets point drain

Overview variants

drainage capacity	Product dimensions (mm)	Finish	Code no.
up to 45 l/min	150/150	Brushed Stainless Steel	56248800

Optional parts:	Code no.
Soundproofing mat	94636000

RainDrain Point Complete sets point drain

Features of all variants

- consists of: point drain, installation set, pre-assembled sealing membrane, basic set, trap, screed protection cover
- grate material: Stainless Steel 304 (1.4301)
- pre-assembled sealing membrane
- connection diameter: DN40
- direction of outlet: horizontal
- easy to clean surface
- height adjustable by 10 mm
- where to use: new construction, renovation
- tile thickness: up to 18 mm
- removable water seal
- rotatable and adjustable siphon body
- easy to clean siphon
- grate removal tool allows easy removal of the finish set
- with removable hair strainer
- type of odour seal: fluid
- material siphon: ABS
- mounting type: free in the floor
- tileable on the back side
- simplified installation due to the cutable siphon
- tile inlay depth: 12 mm
- suitable for primary drainage
- third party controlled acc. DIN EN 1253-3

100/100

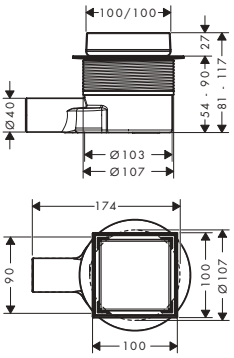

150/150

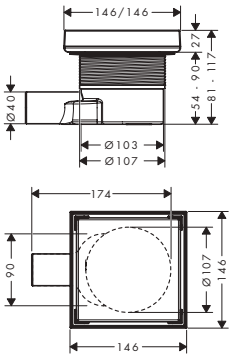

Technologies

Easy Clean Siphon

Quick Clean

Installation

In-floor Installation

Overview variants

drainage capacity	Product dimensions (mm)	Finish	Code no.
up to 41 l/min	100/100	Brushed Stainless Steel	56247800
		Matt Black	56247670
up to 45 l/min	150/150	Brushed Stainless Steel	56249800
		Matt Black	56249670

Optional parts:	Code no.
Soundproofing mat	94636000

Measurements within scale drawings are in mm.
Technical specifications and units of measure are subject to change.

RainDrain Board Tileable shower element 1000/1000 with installation set

Features

- consists of: slope board, substructure element, pre-assembled sealing membrane
- material bottom layer: hard foam
- material top layer: hard foam
- where to use: new construction, renovation
- with integrated slope (1,2%)
- cuttable to the designed length and width
- slope: 12 mm
- pre-assembled sealing membrane
- ready to tile
- suitable for finish sets RainDrain Flex (floor mounted) up to 1000 mm and RainDrain Original 900 mm

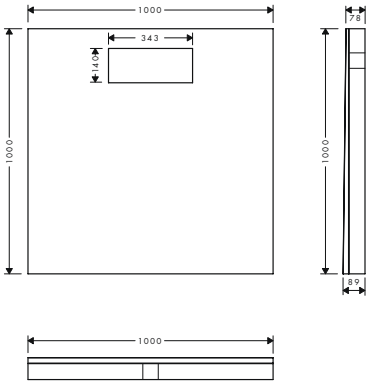

Code no.
56256000

Required parts:

	Code no.
uBox universal Base set for finish sets for standard installation	01001180

RainTurn Slope profile with left or right side connection, adjustable

Features

- version: left, right
- material: Stainless Steel 304 (1.4301)
- height: 34.0 mm
- installation: free in the floor
- length: 1200 mm
- makes slope adjustment in floor-level showers easier, profile for 2% slope, can be placed on any substrate

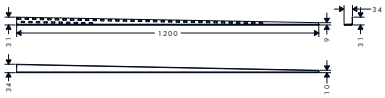

Finish	Code no.
	56158000
Matt Black	56158670

RainTurn Wall profile adjustable

Features

- version: left, right
- material: Stainless Steel 304 (1.4301)
- height: 34.0 mm
- installation: wall
- length: 1200 mm

Finish	Code no.
	56161000
Matt Black	56161670

uBox universal Base set for finish sets for standard installation

Features

- consists of: basic set, trap, pre-assembled sealing membrane, height adjustment boards, screed protection cover
- suitable for RainDrain Match, Flex, Rock and Original finish sets
- where to use: new construction, renovation
- water seal: 50 mm
- minimum construction height: 75 mm
- drainage capacity with siphon: up to 42 l/min
- drainage capacity with Dryphon: up to 60 l/min
- connection diameter: DN50
- direction of outlet: horizontal
- connection: 3-sided
- easy fixation to the floor with mounting bracket
- height adjustable with the foam boards
- mounting type: wall-mounted, free in the floor
- easy to clean siphon
- removable siphon
- suitable for soundproof mounting
- third party controlled acc. DIN EN 1253-3

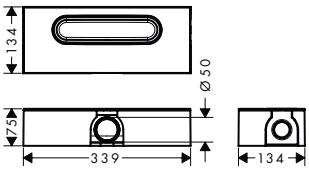

Technologies

Easy Clean Siphon
High Drainage Capacity 60 L/min

Installation

Water Damage Protection

	Code no.
	01001180

Optional parts:	Code no.
Wall mounting set	94345000

uBox universal Base set for finish sets for flat installation

Features

- consists of: basic set, trap, pre-assembled sealing membrane, height adjustment boards, screed protection cover
- suitable for RainDrain Match, Flex, Rock and Original finish sets
- where to use: new construction, renovation
- water seal: 30 mm
- minimum construction height: 57 mm
- drainage capacity with siphon: up to 33 l/min
- drainage capacity with Dryphon: up to 55 l/min
- connection diameter: DN40
- direction of outlet: horizontal
- connection: 3-sided
- easy fixation to the floor with mounting bracket
- height adjustable with the foam boards
- mounting type: wall-mounted, free in the floor
- easy to clean siphon
- removable siphon
- suitable for soundproof mounting

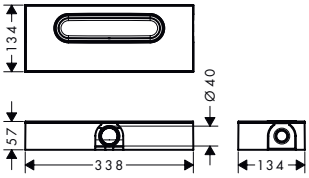

Technologies

Easy Clean Siphon

Installation

Water Damage Protection

	Code no.
	01000180

Optional parts:	Code no.
Wall mounting set	94345000

Measurements within scale drawings are in mm.
Technical specifications and units of measure are subject to change.

uBox universal Base set for finish sets for vertical installation

Features

- consists of: basic set, trap, pre-assembled sealing membrane, screed protection cover
- suitable for RainDrain Match, Flex, Rock and Original finish sets
- where to use: new construction, renovation
- water seal: 50 mm
- minimum construction height: 75 mm
- drainage capacity with siphon: up to 42 l/min
- drainage capacity with Dryphon: up to 60 l/min
- connection diameter: DN50
- direction of outlet: vertical
- connection: 1-sided
- mounting type: wall-mounted, free in the floor
- easy to clean siphon
- removable siphon
- third party controlled acc. DIN EN 1253-3

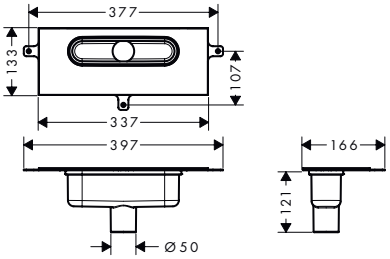

Technologies

Installation

	Code no.
	01002180

Optional parts:		Code no.
	Fire protection adapter (HT PP socket DN 50)	94343000
	Wall mounting set	94345000

RainDrain Installation sets

Features of all variants

- consists of: installation set, pre-assembled sealing membrane, height adjustment feet, tiling aid
- suitable for all RainDrain Rock and RainDrain Match finish sets
- where to use: new construction, renovation
- incl. height adjustment feet and tiling aid for installation
- with integrated slope
- material installation set: Stainless Steel 304 (1.4301)
- third party controlled acc. DIN EN 1253-3

600 - 1200

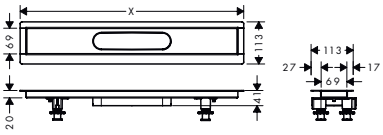

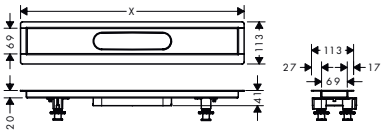

Overview variants

	Length (mm)	Code no.
	600	56010180
	700	56011180
	800	56012180
	900	56013180
	1000	56014180
	1200	56015180

Required parts (choose one):		Code no.
	uBox universal Base set for finish sets for flat installation	01000180
	uBox universal Base set for finish sets for vertical installation	01002180

Measurements within scale drawings are in mm.
Technical specifications and units of measure are subject to change.

uBox universal Complete sets for standard installation

Features of all variants

- consists of: installation set, basic set, pre-assembled sealing membrane, trap, height adjustment boards
- suitable for all RainDrain Rock and RainDrain Match finish sets
- where to use: new construction, renovation
- water seal: 50 mm
- drainage capacity with siphon: up to 42 l/min
- drainage capacity with Dryphon: up to 60 l/min
- connection diameter: DN50
- direction of outlet: horizontal
- connection: 3-sided
- incl. height adjustment feet and tiling aid for installation
- easy fixation to the floor with mounting bracket
- height adjustable with the foam boards
- with integrated slope
- mounting type: wall-mounted, free in the floor
- easy to clean siphon
- removable siphon
- material installation set: Stainless Steel 304 (1.4301)

600 - 1200

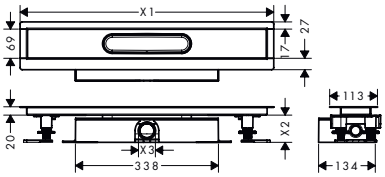

Technologies

Installation

Overview variants

Length (mm)	Code no.
600	56022180
700	56023180
800	56024180
900	56025180
1000	56026180
1200	56027180

uBox universal Complete sets for flat installation

Features of all variants

- consists of: installation set, basic set, pre-assembled sealing membrane, trap, height adjustment boards
- where to use: new construction, renovation
- water seal: 30 mm
- drainage capacity with siphon: up to 33 l/min
- drainage capacity with Dryphon: up to 55 l/min
- connection diameter: DN40
- direction of outlet: horizontal
- connection: 3-sided
- incl. height adjustment feet and tiling aid for installation
- easy fixation to the floor with mounting bracket
- height adjustable with the foam boards
- with integrated slope
- mounting type: wall-mounted, free in the floor
- easy to clean siphon
- removable siphon
- material installation set: Stainless Steel 304 (1.4301)

600 - 1200

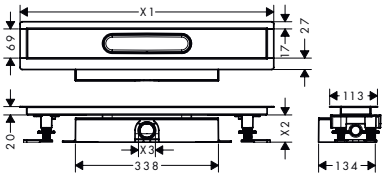

Technologies

Installation

Overview variants

Length (mm)	Code no.
600	56016180
700	56017180
800	56018180
900	56019180
1000	56020180
1200	56021180

Measurements within scale drawings are in mm.
Technical specifications and units of measure are subject to change.

Raindrain Complete set waste set 90 XXL

Features

- consists of: basic set, finish set
- drainage capacity 51 l/min at 15 mm water level
- odour trap - backwater height is 50 mm
- suitable for shower trays with Ø 90 mm waste outlet
- material siphon: plastic
- material of drain plug: stainless steel
- opening for cleaning
- waste pipe Ø 50 mm

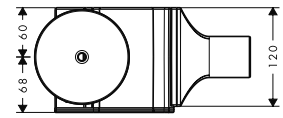

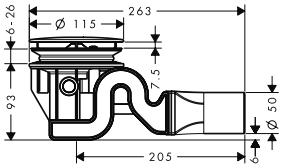

Finish	Code no.
Chrome	60067000

Staro Complete set waste set 90

Features

- consists of: basic set, finish set
- drainage capacity 29 l/min at 15 mm water level
- odour trap - backwater height is 50 mm
- suitable for shower trays with Ø 90 mm waste outlet
- material siphon: plastic
- material of drain plug: stainless steel
- self-cleaning
- PE screw connection G 1½ x 40/ 50 mm
- waste pipe Ø 50 mm
- third party controlled acc. DIN EN 274-3

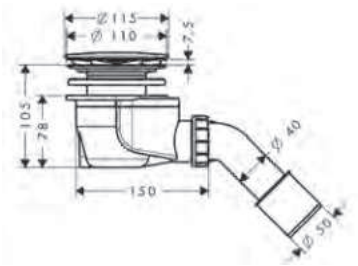

Finish	Code no.
Chrome	60056000

Measurements within scale drawings are in mm.
Technical specifications and units of measure are subject to change.

Wastes and overflows

Spray types

RainFlow

Powerful water stream that bathes the entire body and feels like a waterfall for wonderful relaxation. The stylish spray feels natural as it is poured over the neck and shoulders. It pampers and is like a waterfall in the bathroom.

Finish

Brushed Black Chrome	Brushed Bronze	Chrome	Matt Black	Matt White	Polished Gold Optic
-340	-140	-000	-670	-700	-990

Flexaplus Finish set waste and overflow set

Features

- consists of: turning handle, security plug
- suitable for standard and special bath tubs
- TÜV certified

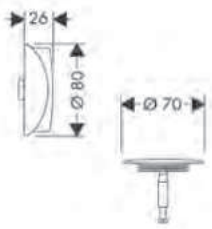

Finish	Code no.
Chrome	58185000
Brushed Bronze	58185140
Brushed Black Chrome	58185340
Matt Black	58185670
Matt White	58185700
Polished Gold Optic	58185990

Required parts:	Code no.
Flexaplus Basic set waste and overflow set for standard bath tubs	58140180
Flexaplus Basic set waste and overflow set for special bath tubs	58141180

Flexaplus S Finish set waste and overflow set

Features

- consists of: turning handle, security plug
- suitable for standard and special bath tubs
- third party controlled acc. DIN EN 274-3

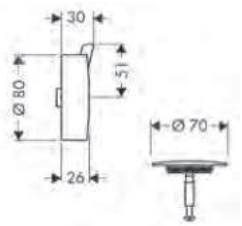

Finish	Code no.
Chrome	58186000

Required parts:	Code no.
Flexaplus Basic set waste and overflow set for special bath tubs	58141180
Flexaplus Basic set waste and overflow set for standard bath tubs	58140180

Waste set push-open for bath tubs

Features

- diameter of drain plug: G 1 1/2"

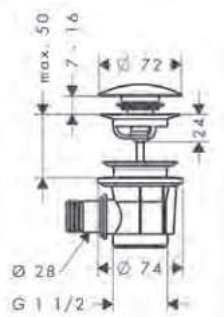

Finish	Code no.
Chrome	50107000

Required parts:	Finish	Code no.
Exafill Finish set bath filler	Chrome	58112000

Optional parts:	Code no.
Bath tub trap	56373000

Measurements within scale drawings are in mm.
Technical specifications and units of measure are subject to change.

Flexaplus Basic set waste and overflow set for standard bath tubs

Features

- suitable for standard bath tubs
- odour trap - backwater height is 50 mm
- flexible overflow hose
- bowden cable length 520 mm
- PE screw connection G 1½ x 40/ 50 mm
- third party controlled acc.: DIN EN 274-3

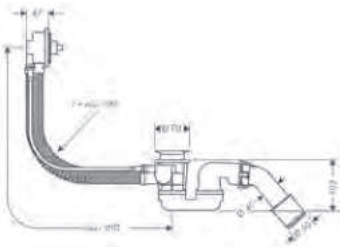

Code no.
58140180

Required parts:		Finish	Code no.
	Flexaplus Finish set waste and overflow set	Chrome	58185000
		Brushed Bronze	58185140
		Brushed Black Chrome	58185340
		Matt Black	58185670
		Matt White	58185700
		Polished Gold Optic	58185990
	Flexaplus S Finish set waste and overflow set	Chrome	58186000

Flexaplus Basic set waste and overflow set for standard bath tubs and shower trays

Features

- suitable for standard bath tubs
- odour trap - backwater height is 50 mm
- flexible overflow hose
- bowden cable length 520 mm
- PE screw connection G 1½ x 40/ 50 mm
- third party controlled acc.: DIN EN 274-3

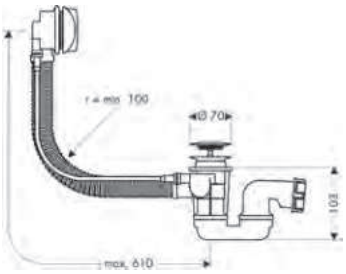

Finish	Code no.
Chrome	58142000

Flexaplus Basic set waste and overflow set for special bath tubs

Features

- suitable for special bath tubs
- odour trap - backwater height is 50 mm
- flexible overflow hose
- bowden cable length 780 mm
- PE screw connection G 1½ x 40/ 50 mm
- third party controlled acc.: DIN EN 274-3

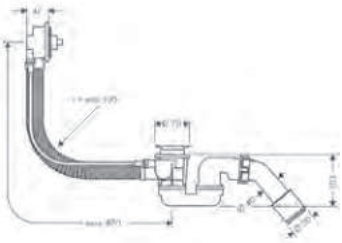

Code no.
58141180

Measurements within scale drawings are in mm.
Technical specifications and units of measure are subject to change.

Flexaplus Basic set waste and overflow set for special bath tubs

Required parts:	Finish	Code no.
Flexaplus Finish set waste and overflow set	Chrome	58185000
	Brushed Bronze	58185140
	Brushed Black Chrome	58185340
	Matt Black	58185670
	Matt White	58185700
	Polished Gold Optic	58185990
Flexaplus S Finish set waste and overflow set	Chrome	58186000

Flexaplus Complete set waste and overflow set for standard bath tubs

Features

- consists of: basic set, finish set
- suitable for standard bath tubs
- odour trap - backwater height is 50 mm
- flexible overflow hose
- bowden cable length 520 mm
- PE screw connection G 1½ x 40/ 50 mm
- TÜV certified
- third party controlled acc.: DIN EN 274-3

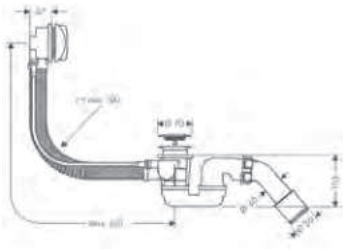

Finish	Code no.
Chrome	58143000

Flexaplus S Complete set waste and overflow set for standard bath tubs

Features

- consists of: basic set, finish set
- suitable for standard bath tubs
- odour trap - backwater height is 50 mm
- flexible overflow hose
- bowden cable length 520 mm
- PE screw connection G 1½ x 40/ 50 mm
- TÜV certified
- third party controlled acc.: DIN EN 274-3

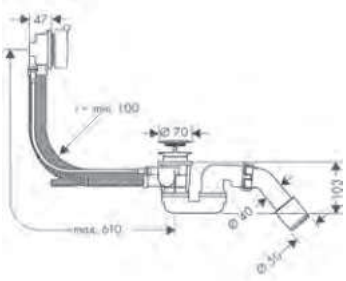

Finish	Code no.
Chrome	58150000

Bath tub trap

Features

- odour trap - backwater height is 50 mm
- PE screw connection G 1½ x 40/ 50 mm

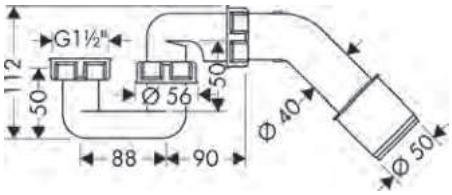

Code no.
56373000

Measurements within scale drawings are in mm.
Technical specifications and units of measure are subject to change.

Exafill Finish set bath filler, waste and overflow set

Features

- consists of: cover, security plug
- suitable for standard and special bath tubs
- triple aerator
- jet former can be adjusted by 20°
- maximum flow rate at 3 bar: 23 l/min
- TÜV certified
- third party controlled acc. DIN EN 274-3

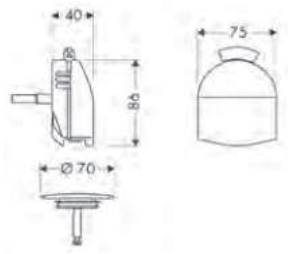

Finish	Code no.
Chrome	58127000

Required parts:	Code no.
Exafill Basic set bath filler, waste and overflow set for standard bath tubs	58125180
Exafill Basic set bath filler, waste and overflow set for special bath tubs	58126180

Optional parts:	Code no.
Flexible connection tube 80 cm	58192000

Exafill Finish set bath filler, waste and overflow set plus

Features

- consists of: cover, security plug
- suitable for standard and special bath tubs, bath tubs with recessed overflow opening
- triple aerator
- jet former can be adjusted by 20°
- maximum flow rate at 3 bar: 23 l/min
- TÜV certified
- third party controlled acc. DIN EN 274-3

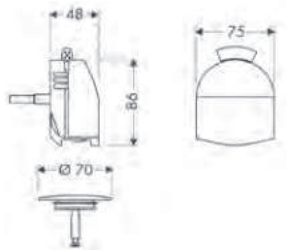

Finish	Code no.
Chrome	58128000

Required parts:	Code no.
Exafill Basic set bath filler, waste and overflow set for standard bath tubs	58125180
Exafill Basic set bath filler, waste and overflow set for special bath tubs	58126180

Optional parts:	Code no.
Flexible connection tube 80 cm	58192000

Exafill S Finish set bath filler, waste and overflow set

Features

- consists of: cover, security plug
- suitable for standard and special bath tubs
- wide flood jet
- jet former can be adjusted by 30°
- maximum flow rate at 3 bar: 19 l/min
- TÜV certified

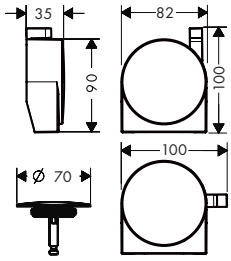

Spray types

Finish	Code no.
Chrome	58117000
Brushed Bronze	58117140
Brushed Black Chrome	58117340
Matt Black	58117670
Matt White	58117700
Polished Gold Optic	58117990

Required parts:		Code no.
	Exafill S Basic set bath filler, waste and overflow set for standard bath tubs	58115180
	Exafill S Basic set bath filler, waste and overflow set for special bath tubs	58116180

Optional parts:		Code no.
	Flexible connection tube 80 cm	58192000

Exafill Finish set bath filler

Features

- maximum flow rate at 3 bar: 26 l/min
- overflow height adjustable by 25 mm

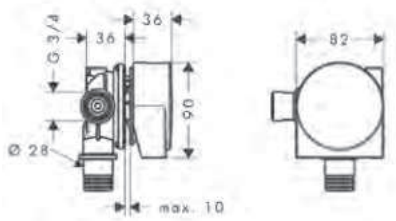

Finish	Code no.
Chrome	58112000

Required parts:		Finish	Code no.
	Waste set push-open for bath tubs	Chrome	50107000

Optional parts:		Code no.
	Bath tub trap	56373000

Measurements within scale drawings are in mm.
Technical specifications and units of measure are subject to change.

Exafill Basic set bath filler, waste and overflow set for standard bath tubs

Features

- consists of: basic set, bath tub trap
- suitable for standard bath tubs
- odour trap - backwater height is 50 mm
- supply hose water connection left and right DN20
- bowden cable length 520 mm
- third party controlled acc.: DIN EN 274-3

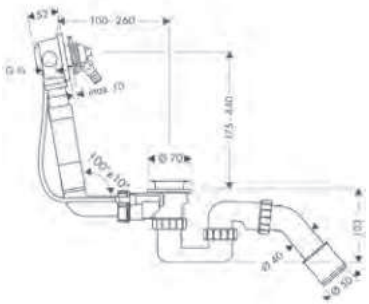

Code no.
58125180

Required parts:		Finish	Code no.
	Exafill Finish set bath filler, waste and overflow set plus	Chrome	58128000
	Exafill Finish set bath filler, waste and overflow set	Chrome	58127000

Optional parts:		Code no.
	Flexible connection tube 80 cm	58192000

Exafill Basic set bath filler, waste and overflow set for special bath tubs

Features

- consists of: basic set, bath tub trap
- suitable for special bath tubs, with bellows for bath tubs with slanted bath rim
- odour trap - backwater height is 50 mm
- supply hose water connection left and right DN20
- bowden cable length 780 mm
- third party controlled acc.: DIN EN 274-3

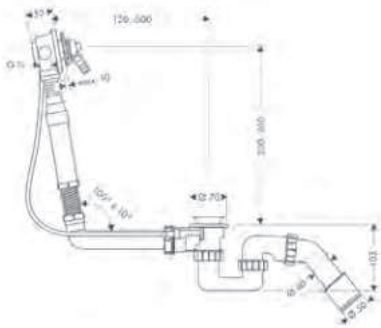

Code no.
58126180

Required parts:		Finish	Code no.
	Exafill Finish set bath filler, waste and overflow set plus	Chrome	58128000
	Exafill Finish set bath filler, waste and overflow set	Chrome	58127000

Optional parts:		Code no.
	Flexible connection tube 80 cm	58192000

Measurements within scale drawings are in mm.
Technical specifications and units of measure are subject to change.

Exafill Complete set bath filler, waste and overflow set for standard bath tubs

Features

- consists of: bath tub trap, basic set, finish set
- suitable for standard bath tubs
- odour trap - backwater height is 50 mm
- supply hose water connection left and right DN20
- bowden cable length 520 mm
- material: plastic
- TÜV certified
- third party controlled acc.: DIN EN 274-3

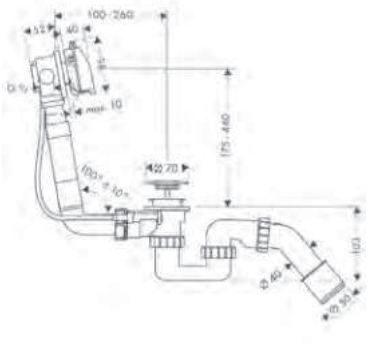

Finish	Code no.
Chrome	58123000

Optional parts:	Code no.
Flexible connection tube 80 cm	58192000

Exafill S Basic set bath filler, waste and overflow set for standard bath tubs

Features

- consists of: basic set, bath tub trap
- suitable for standard bath tubs, with bellows for bath tubs with slanted bath rim
- odour trap - backwater height is 50 mm
- supply hose water connection left DN20
- bowden cable length 520 mm
- third party controlled acc.: DIN EN 274-3

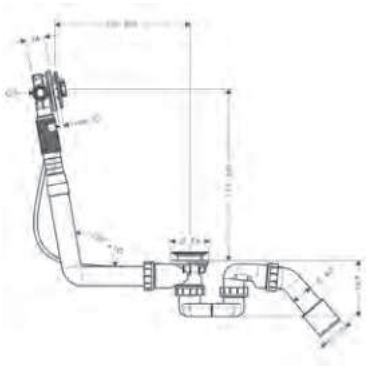

	Code no.
	58115180

Required parts:	Finish	Code no.
Exafill S Finish set bath filler, waste and overflow set	Chrome	58117000
	Brushed Bronze	58117140
	Brushed Black Chrome	58117340
	Matt Black	58117670
	Matt White	58117700
	Polished Gold Optic	58117990

Optional parts:	Code no.
Flexible connection tube 80 cm	58192000

Measurements within scale drawings are in mm.
Technical specifications and units of measure are subject to change.

Exafill S Basic set bath filler, waste and overflow set for special bath tubs

Features

- consists of: basic set, bath tub trap
- suitable for special bath tubs, with bellows for bath tubs with slanted bath rim
- odour trap - backwater height is 50 mm
- supply hose water connection left DN20
- bowden cable length 780 mm
- third party controlled acc.: DIN EN 274-3

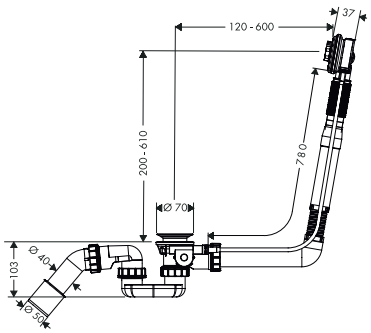

	Code no.
	58116180

Required parts:	Finish	Code no.
Exafill S Finish set bath filler, waste and overflow set	Chrome	58117000
	Brushed Bronze	58117140
	Brushed Black Chrome	58117340
	Matt Black	58117670
	Matt White	58117700
	Polished Gold Optic	58117990

Optional parts:	Code no.
Flexible connection tube 80 cm	58192000

Exafill S Complete set bath filler, waste and overflow set for standard bath tubs

Features

- consists of: bath tub trap, basic set, finish set
- suitable for standard bath tubs, with bellows for bath tubs with slanted bath rim
- odour trap - backwater height is 50 mm
- supply hose water connection left DN20
- bowden cable length 520 mm
- TÜV certified
- third party controlled acc.: DIN EN 274-3

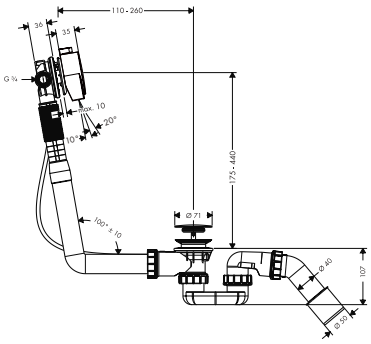

Finish	Code no.
Chrome	58113000

Optional parts:	Code no.
Flexible connection tube 80 cm	58192000

Flexible connection tube 80 cm

Features

- length 800 mm
- version: 90° angle

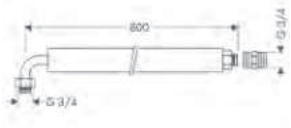

Code no.
58192000

Measurements within scale drawings are in mm.
Technical specifications and units of measure are subject to change.

Waste set pop-up for basin and bidet mixers

Features

- operation via pull-rod
- for basins with overflow hole
- drain plug material brass
- connection dimension: G 1¼
- with overflow

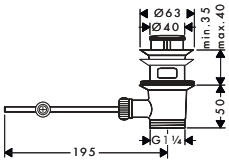

Finish	Code no.
Chrome	94139000
Brushed Bronze	94139140
Brushed Black Chrome	94139340
Matt Black	94139670
Matt White	94139700
Polished Gold Optic	94139990

Waste set push-open for basin and bidet mixers

Features

- operation with pressure plug
- for basins with overflow hole
- drain plug material brass
- connection dimension: G 1¼
- with overflow

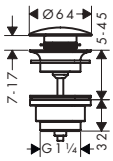

Finish	Code no.
Chrome	50100000
Brushed Bronze	50100140
Brushed Black Chrome	50100340
Matt Black	50100670
Matt White	50100700
Polished Gold Optic	50100990

Waste set push-open for basin and bidet

Features

- operation with pressure plug
- for basins with overflow hole
- drain plug material synthetic
- connection dimension: G 1¼
- with overflow
- third party controlled acc. DIN EN 274-3

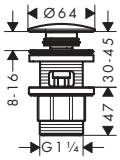

Finish	Code no.
Chrome	50105000

Waste set non-closing for wash basins

Features

- non-closing valve
- for washbasins without overflow
- drain plug material stainless steel
- connection dimension: G 1¼

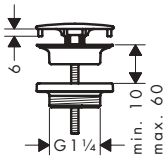

Finish	Code no.
Chrome	50001000
Brushed Bronze	50001140
Brushed Black Chrome	50001340
Matt Black	50001670
Matt White	50001700
Polished Gold Optic	50001990

Measurements within scale drawings are in mm.
Technical specifications and units of measure are subject to change.

Angle valve with cover outlet G 3/8

Features

- consists of: angle valve, cover
- connection dimension entry: G ½
- connection dimension outlet: G ⅜
- packaging unit: 1 piece

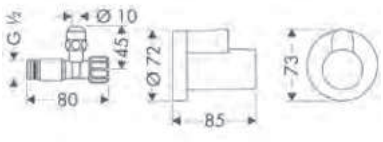

Finish	Code no.
Chrome	13954000

Angle valve with microfilter outlet G 3/8

Features

- for protection of mixers against dirt inlet, e.g. for electronic basin mixers
- filter element can be removed and cleaned
- connection dimension entry: G ½
- connection dimension outlet: G ⅜
- packaging unit: 1 piece

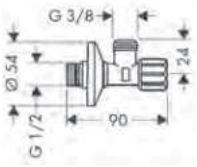

Finish	Code no.
Chrome	13904000

Optional parts:	Finish	Code no.
Cover	Chrome	13950000

Angle valve E outlet G 3/8

Features

- connection dimension entry: G ½
- connection dimension outlet: G ⅜
- packaging unit: 1 piece
- noise class: I
- flow rate class: A

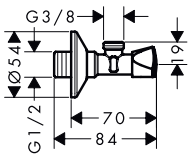

Finish	Code no.
Chrome	13902000

Measurements within scale drawings are in mm.
Technical specifications and units of measure are subject to change.

Angle valve E outlet G 1/2

Features

- connection dimension entry: G ½
- connection dimension outlet: G ½
- packaging unit: 1 piece
- noise class: I
- flow rate class: A

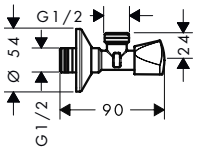

Finish	Code no.
Chrome	13903000

Angle valve S outlet G 3/8

Features

- connection dimension entry: G ½
- connection dimension outlet: G ⅜
- packaging unit: 1 piece
- noise class: I
- flow rate class: A

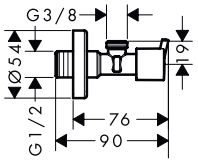

Finish	Code no.
Chrome	13901000

Cover

Features

- for the facing of an angle valve

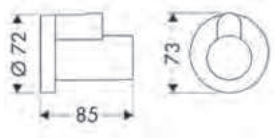

Finish	Code no.
Chrome	13950000
Brushed Bronze	13950140
Brushed Black Chrome	13950340
Matt Black	13950670
Matt White	13950700
Polished Gold Optic	13950990

Design trap Flowstar

Features

- adjustment distance 65 - 165 mm
- distance to wall 330 mm
- odour trap - backwater height is 70 mm
- connection dimension entry: G 1¼
- third party controlled acc. DIN EN 274-3

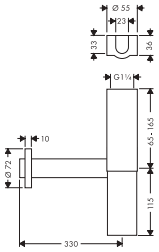

Finish	Code no.
Chrome	52100000

Design trap Flowstar set

Features

- consists of: design trap, 2 angle valves, 2 covers
- adjustment distance 65 - 165 mm
- distance to wall 330 mm
- odour trap - backwater height is 75 mm
- connection dimension entry: G 1¼

Finish	Code no.
Chrome	52120000

Design trap Flowstar S

Features

- adjustment distance 60 - 165 mm
- distance to wall 330 mm
- odour trap - backwater height is 75 mm
- connection dimension entry: G 1¼
- connection dimension outlet: DN32
- third party controlled acc. DIN EN 274-3

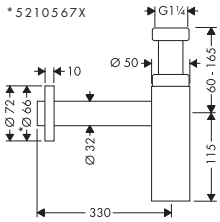

Finish	Code no.
Chrome	52105000
Brushed Bronze	52105140
Brushed Black Chrome	52105340
Matt Black	52105670
Matt White	52105700
Polished Gold Optic	52105990

Measurements within scale drawings are in mm.
Technical specifications and units of measure are subject to change.

Cup-shaped trap standard model

Features

- main material: brass
- adjustment distance 35 - 95 mm
- distance to wall 225 mm
- odour trap - backwater height is 50 mm
- connection dimension entry: G 1¼
- connection dimension outlet: DN32

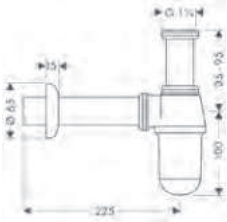

Finish	Code no.
Chrome	52053000

Cup-shaped trap easy to install

Features

- adjustment distance 35 - 140 mm
- distance to wall 285 mm
- odour trap - backwater height is 50 mm
- connection dimension entry: G 1¼

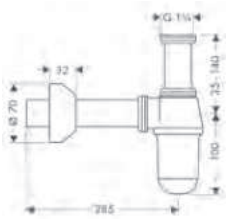

Finish	Code no.
Chrome	52010000

Cup-shaped trap standard model for bidet

Features

- adjustment distance 35 - 95 mm
- distance to wall 220 mm
- odour trap - backwater height is 30 mm
- connection dimension entry: G 1¼

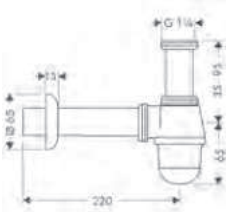

Finish	Code no.
Chrome	55213000

Pipe trap standard model

Features

- adjustment distance 35 - 85 mm
- distance to wall 250 mm
- odour trap - backwater height is 50 mm
- connection dimension entry: G 1¼
- third party controlled acc. DIN EN 274-3

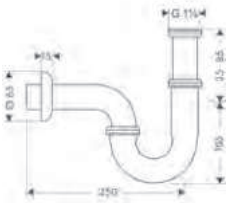

Finish	Code no.
Chrome	53002000

Measurements within scale drawings are in mm.
Technical specifications and units of measure are subject to change.

Pipe trap easy to install

Features

- adjustment distance 30 - 120 mm
- distance to wall 300 mm
- odour trap - backwater height is 50 mm
- connection dimension entry: G 1¼

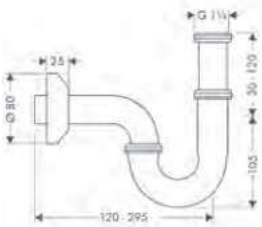

Finish	Code no.
Chrome	53010000

Pipe trap standard model for bidet

Features

- adjustment distance 30 - 55 mm
- distance to wall 275 mm
- odour trap - backwater height is 50 mm
- connection dimension entry: G 1¼

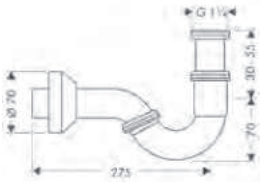

Finish	Code no.
Chrome	55237000

Curved pipe 30 cm

Features

- length 300 mm
- with edge
- material: brass
- connection dimension: G 1¼

Finish	Code no.
Chrome	53555000

Straight pipe 50 cm

Features

- length 500 mm
- material: brass
- connection dimension: G 1¼

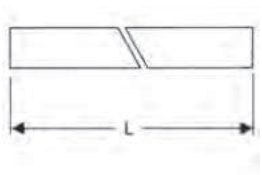

Finish	Code no.
Chrome	53493000
Matt Black	53493670
Matt White	53493700

Measurements within scale drawings are in mm.
Technical specifications and units of measure are subject to change.

Straight pipe 30 cm with rim

Features

- length 300 mm
- with edge
- material: brass
- connection dimension: G 1¼

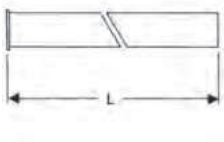

Finish	Code no.
Chrome	53428000
Matt Black	53428670
Matt White	53428700

Angle pipe 90°

Features

- material: brass
- connection dimension: G 1¼

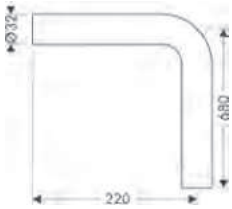

Finish	Code no.
Chrome	53646000

Extension pipe 12.5 cm

Features

- length 125 mm
- material: brass
- connection dimension: G 1¼

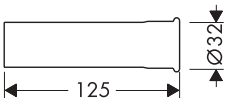

Finish	Code no.
Chrome	53990000

Wall flange

Features

- material: brass
- connection dimension: DN15
- packaging unit: 100 pieces
- Price refers to 1 piece

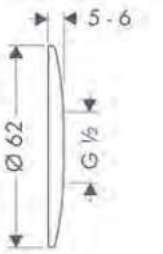

Finish	Code no.
Chrome	06010000

Measurements within scale drawings are in mm.
Technical specifications and units of measure are subject to change.

Thermostats exposed installation

Thermostats exposed installation

	ShowerTablet Select				Ecostat Select
Finish					
Select	■	■	■	■	–
CoolContact	■	■	■	■	■
Safety lock at 40 degrees	■	■	■	■	■
Temperature limitation adjustable	■	■	■	■	■
Water Flow Control	–	–	■	■	■
Bath spout	–	■	–	■	–
from page	326	327	328	329	330

	Ecostat Comfort		Ecostat Element		Ecostat Fine
Finish					
Select	–	–	–	–	–
CoolContact	–	–	–	–	–
Safety lock at 40 degrees	■	■	■	■	■
Temperature limitation adjustable	■	■	■	■	■
Water Flow Control	■	■	■	■	■
Bath spout	–	■	–	■	–
from page	333	334	334	335	335

■ available depending on the model
– not available

	Ecostat Select	Ecostat E		Ecostat Comfort	
Finish					
Select	–	–	–	–	–
CoolContact	■	■	■	–	–
Safety lock at 40 degrees	■	■	■	■	■
Temperature limitation adjustable	■	■	■	■	■
Water Flow Control	■	■	■	■	■
Bath spout	■	–	■	–	■
from page	331	331	332	332	333

	Ecostat Fine		Ecostat 1001 CL		Ecostat universal
Finish					
Select	–	–	–	–	–
CoolContact	–	–	–	–	–
Safety lock at 40 degrees	■	–	■	■	■
Temperature limitation adjustable	■	■	■	■	■
Water Flow Control	■	■	■	■	■
Bath spout	–	–	–	■	–
from page	336	336	337	337	338

Thermostats exposed installation

	Ecostat universal	Ecostat
Finish		
Select	–	–
CoolContact	–	–
Safety lock at 40 degrees	■	–
Temperature limitation adjustable	■	■
Water Flow Control	■	–
Bath spout	■	–
from page	338	339

■ available depending on the model
– not available

Sustainability

EcoStop

Consciously save valuable resources thanks to the EcoStop function. The water consumption of your thermostat is regulated to a maximum of 10 l/ min. If more water is needed, a higher water flow can be released by simply pressing the EcoStop button.

EcoStop+

Consciously save valuable resources thanks to the EcoStop+ function. The water consumption of your thermostat is regulated to a maximum of 6 l/ min. If more water is needed, a higher water flow can be released by simply pressing the EcoStop+ button.

Water flow control

The amount of water can be precisely adjusted via a control dial on the water-saving thermostat control, enabling you to use less water every day. Ideal also for children, who usually prefer gentle flow of water anyway.

Technologies

Thermostat

Safe and reliable: The thermostat with integrated temperature control continuously monitors the water temperature while showering or bathing. It reacts quickly to changes in pressure and keeps the temperature comfortably at a constant level. For pleasant water enjoyment at all times.

SafetyStop

A temperature limitation that ensures safe showering pleasure at all times. The function prevents too hot water from coming out of the shower. The scald protection is a big safety plus, especially for children or people with restricted mobility.

CoolContact

This thermostatic mixer is fitted with innovative cooling technology to prevent it from getting too hot, keeping it nice and cool to the touch. For care-free showering with no need to keep a safe distance or fear scalding.

Technologies

Select

The Select push button simplifies daily bathroom routines, as one simple push is all it takes for water to flow or stop. When showering, the user-friendly button can change the spray type or switch from the overhead to the hand shower.

QuickClean

Who actually likes cleaning? Limescale deposits and dirt disappear in an instant with this technology. Simply rub the flexible silicone discs or nozzles with a finger. It's fast and keeps cleaning to a minimum.

AirPower

Mixes generous quantities of air into the water. The enriched droplets are luxurious, light and soothing on the skin and cause less splash in the wash basin. For a more efficient use of the precious resource that is water.

Rotatable Bath Spout

For lovers of minimalist and safe bathroom solutions: The water inlet on the thermostatic bath mixer can be swivelled by 90° to keep it out of sight under the tap. For a clean look and more elbow room when enjoying a bath or shower.

Finish

Brushed Black Chrome

-340

Brushed Bronze

-140

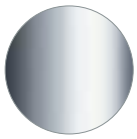

Chrome

-000

Matt Black

-670

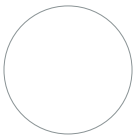

Matt White

-700

Polished Gold Optic

-990

White/ Chrome

-400

ShowerTablet Select Shower thermostat 300 for exposed installation

Features

- 1 function
- Select push-button on/off control for 1 outlet
- CoolContact thermostat: Prevents the housing from heating up, making showering even safer
- thermostat cartridge, Start/stop valve to operate the functions
- maximum flow rate at 3 bar: 14 l/min
- min. operating pressure: 1 bar
- max. operating pressure: 10 bar
- in case of installation on existing G ¾ connections, adaptor no.02026000 must be used
- Safety stop at 40 °C
- temperature limitation adjustable
- with isolated water conduction
- non-return valve
- with silencer
- shelf made of safety glass
- surface shelf: mirror glass
- material handles: metal
- centre distance: 150 ± 12 mm
- connection dimension: DN15
- connection type: adjustable connection, G ½
- dirt filter included
- thermostat is delivered with button hand shower

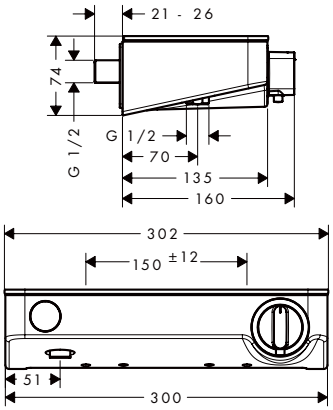

Technologies

Certificates/declarations

Finish	Code no.
Chrome	13171000
White/Chrome	13171400

13171400 Surface shelf: white glass.

Optional parts:		Finish	Code no.
	S-connections adapter G ¾ for renovation	Chrome	02026000

Measurements within scale drawings are in mm.
Technical specifications and units of measure are subject to change.

ShowerTablet Select Bath thermostat 300 for exposed installation

Features

- projection 192 mm
- 2 functions
- simultaneous utilization of 2 functions
- Select push-button on/off control for 2 outlets
- CoolContact thermostat: Prevents the housing from heating up, making showering even safer
- thermostat cartridge, Start/stop valve to operate the functions
- maximum flow rate at 3 bar: 20 l/min
- flow rate for bath spout at 3 bar: 20 l/min
- flow rate of hand shower at 3 bar: 16 l/min
- min. operating pressure: 1 bar
- max. operating pressure: 10 bar
- Safety stop at 40 °C
- temperature limitation adjustable
- with isolated water conduction
- non-return valve
- protected against backflow, according to DIN EN 1717
- with silencer
- material handles: metal
- shelf made of safety glass
- surface shelf: mirror glass
- in case of installation on existing G ¾ connections, adaptor no.02026000 must be used
- connection dimension: DN15
- connection type: G ½
- centre distance: 150 ± 12 mm
- dirt filter included
- thermostat is delivered with buttons hand shower and bath tub

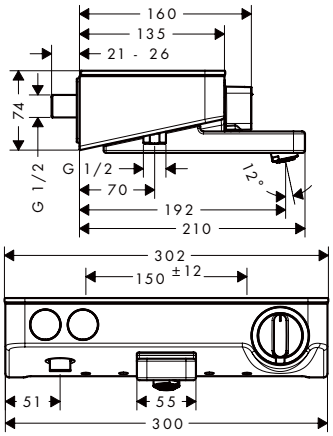

Technologies

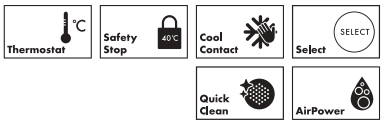

Certificates/declarations

EPD

Finish	Code no.
Chrome	13151000
White/Chrome	13151400

13151400 Surface shelf: white glass.

Optional parts:		Finish	Code no.
	S-connections adapter G ¾ for renovation	Chrome	02026000

ShowerTablet Select Shower thermostat 400 for exposed installation

Features

- 1 function
- temperature and water flow control
- Select push-button on/off control for 1 outlet
- hand shower holder integrated in the shelf
- water flow control with stop function
- CoolContact thermostat: Prevents the housing from heating up, making showering even safer
- maximum flow rate at 3 bar: 16,3 l/min
- min. operating pressure: 1 bar
- max. operating pressure: 10 bar
- Safety stop at 40 °C
- temperature limitation adjustable
- with isolated water conduction
- non-return valve
- with silencer
- suitable for continous flow water heaters
- shelf made of plastic
- surface shelf: graphite
- material handles: plastic
- centre distance: 150 ± 12 mm
- connection dimension: DN15
- connection type: S-connections, G ½
- dirt filter included
- thermostat is delivered with button hand shower

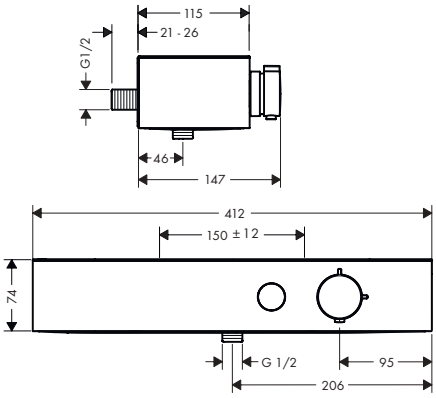

Sustainability

Technologies

Finish	Code no.
Chrome	24360000
Brushed Bronze	24360140
Matt Black	24360670
Matt White	24360700

Optional parts:		Finish	Code no.
	S-connections adapter G ¾ for renovation	Chrome	02026000

Measurements within scale drawings are in mm.
Technical specifications and units of measure are subject to change.

ShowerTablet Select Bath thermostat 400 for exposed installation

Features

- rotatable bath spout
- 2 functions
- simultaneous utilization of 2 functions
- temperature and water flow control
- Select push-button on/off control for 2 outlets
- water flow control with stop function
- CoolContact thermostat: Prevents the housing from heating up, making showering even safer
- maximum flow rate at 3 bar: 20,9 l/min
- flow rate for bath spout at 3 bar: 20,9 l/min
- flow rate of hand shower at 3 bar: 15,8 l/min
- min. operating pressure: 1 bar
- max. operating pressure: 10 bar
- Safety stop at 40 °C
- temperature limitation adjustable
- with isolated water conduction
- non-return valve
- protected against backflow, according to DIN EN 1717
- with silencer
- suitable for continous flow water heaters
- material handles: plastic
- shelf made of plastic
- surface shelf: graphite
- connection dimension: DN15
- connection type: G ½
- centre distance: 150 ± 12 mm
- dirt filter included
- thermostat is delivered with buttons hand shower and bath tub

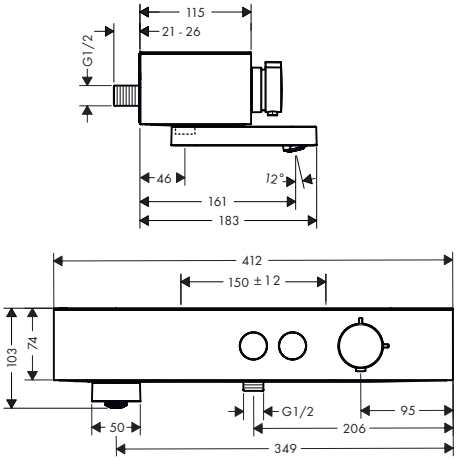

Sustainability

Water Flow Control

Technologies

Thermostat | Safety Stop | Cool Contact | Select | Rotatable Bath Spout

Finish	Code no.
Chrome	24340000
Brushed Bronze	24340140
Matt Black	24340670
Matt White	24340700

Optional parts:	Finish	Code no.
S-connections adapter G ¾ for renovation	Chrome	02026000

Measurements within scale drawings are in mm.
Technical specifications and units of measure are subject to change.

Ecostat Select Shower thermostats for exposed installation

Features of all variants

- 1 function
- volume control for 1 function
- EcoStop button limits the water consumption to 10 l/min
- CoolContact thermostat: Prevents the housing from heating up, making showering even safer
- thermostat cartridge, ceramic valve 180°
- min. operating pressure: 1 bar
- max. operating pressure: 10 bar
- Safety stop at 40 °C
- temperature limitation adjustable
- with isolated water conduction
- non-return valve
- with silencer
- shelf made of safety glass
- surface shelf: mirror glass
- material handles: metal
- centre distance: 150 ± 12 mm
- connection dimension: DN15
- connection type: S-connections, G ½
- dirt filter included

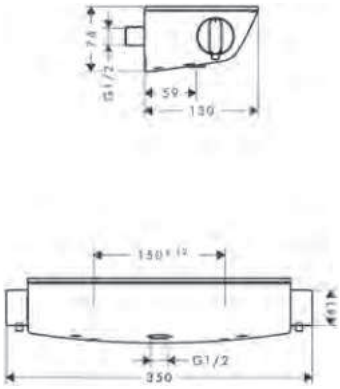

Sustainability

EcoStop | Water Flow Control

Technologies

Thermostat | Safety Stop | Cool Contact

Certificates/declarations

EPD

Overview variants

	Renovation	Finish	Code no.
	–	Chrome	13161000
		White/Chrome	13161400
	■	Chrome	13111000
		White/Chrome	13111400

13161400
13111400 — Surface shelf: white glass.

Optional parts:		For	Finish	Code no.
	S-connections adapter G ¾ for renovation	13161XXX	Chrome	02026000

Measurements within scale drawings are in mm.
Technical specifications and units of measure are subject to change.

Ecostat Select Bath thermostat for exposed installation

Features

- projection 193 mm
- 2 functions
- CoolContact thermostat: Prevents the housing from heating up, making showering even safer
- thermostat cartridge, ceramic valve 180°
- maximum flow rate at 3 bar: 20 l/min
- flow rate for bath spout at 3 bar: 20 l/min
- flow rate of hand shower at 3 bar: 12 l/min
- min. operating pressure: 1 bar
- max. operating pressure: 10 bar
- Safety stop at 40 °C
- temperature limitation adjustable
- with isolated water conduction
- non-return valve
- protected against backflow, according to DIN EN 1717
- with silencer
- material handles: metal
- shelf made of safety glass
- surface shelf: mirror glass
- in case of installation on existing G ¾ connections, adaptor no.02026000 must be used
- connection dimension: DN15
- connection type: G ½
- centre distance: 150 ± 12 mm
- dirt filter included

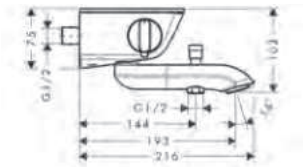

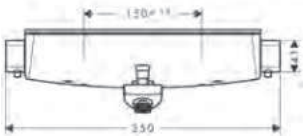

Sustainability

Water Flow Control

Technologies

Thermostat | Safety Stop | Cool Contact | Quick Clean | AirPower

Certificates/declarations

EPD

Finish	Code no.
Chrome	13141000
White/Chrome	13141400

13141400	Surface shelf: white glass.

Optional parts:		Finish	Code no.
	S-connections adapter G ¾ for renovation	Chrome	02026000

Ecostat E Shower thermostat for exposed installation

Features

- 1 function
- EcoStop button limits the water consumption to 10 l/min
- CoolContact thermostat: Prevents the housing from heating up, making showering even safer
- thermostat cartridge
- maximum flow rate at 3 bar: 28,6 l/min
- min. operating pressure: 1 bar
- max. operating pressure: 10 bar
- Safety stop at 40 °C
- temperature limitation adjustable
- with isolated water conduction
- non-return valve
- with silencer
- suitable for continous flow water heaters
- material handles: metal
- centre distance: 150 ± 12 mm
- connection dimension: DN15
- connection type: S-connections, G ½
- dirt filter included

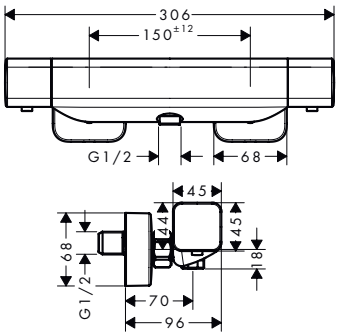

Sustainability

EcoStop | Water Flow Control

Technologies

Thermostat | Safety Stop | Cool Contact

Certificates/declarations

EPD

Finish	Code no.
Chrome	15773000

Measurements within scale drawings are in mm.
Technical specifications and units of measure are subject to change.

Ecostat E Bath thermostat for exposed installation

Features

- projection 183 mm
- 2 functions
- CoolContact thermostat: Prevents the housing from heating up, making showering even safer
- thermostat cartridge
- maximum flow rate at 3 bar: 18,6 l/min
- flow rate for bath spout at 3 bar: 18,6 l/min
- flow rate of hand shower at 3 bar: 15,4 l/min
- min. operating pressure: 1 bar
- max. operating pressure: 10 bar
- Safety stop at 40 °C
- temperature limitation adjustable
- non-return valve
- protected against backflow, according to DIN EN 1717
- with silencer
- material handles: metal
- connection dimension: DN15
- connection type: G ½
- centre distance: 150 ± 12 mm
- dirt filter included

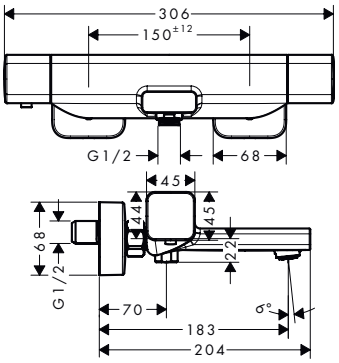

Sustainability

Water Flow Control

Technologies

Thermostat | Safety Stop | Cool Contact | Quick Clean

Certificates/declarations

EPD

Finish	Code no.
Chrome	15774000

Ecostat Comfort Shower thermostat for exposed installation

Features

- 1 function
- EcoStop button limits the water consumption to 10 l/min
- thermostat cartridge, ceramic valve 180°
- maximum flow rate at 3 bar: 17 l/min
- min. operating pressure: 1 bar
- max. operating pressure: 10 bar
- Safety stop at 40 °C
- temperature limitation adjustable
- non-return valve
- with silencer
- suitable for continous flow water heaters
- material handles: metal
- centre distance: 150 ± 12 mm
- connection dimension: DN15
- connection type: S-connections, G ½
- dirt filter included

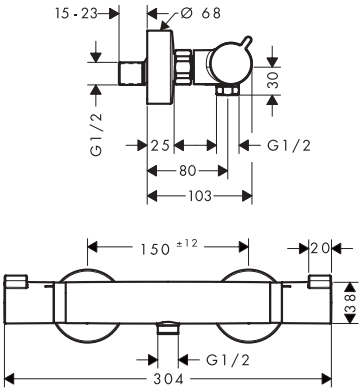

Sustainability

EcoStop | Water Flow Control

Technologies

Thermostat | Safety Stop

Certificates/declarations

EPD

Finish	Code no.
Chrome	13116000
Brushed Bronze	13116140
Brushed Black Chrome	13116340
Matt Black	13116670
Matt White	13116700
Polished Gold Optic	13116990

Measurements within scale drawings are in mm.
Technical specifications and units of measure are subject to change.

Ecostat Comfort Bath thermostat for exposed installation

Features

- projection 177 mm
- 2 functions
- thermostat cartridge, shut-off/ diverter valve
- spray type spout: normal spray
- maximum flow rate at 3 bar: 20 l/min
- flow rate for bath spout at 3 bar: 20 l/min
- flow rate of hand shower at 3 bar: 16 l/min
- min. operating pressure: 1 bar
- max. operating pressure: 10 bar
- Safety stop at 40 °C
- temperature limitation adjustable
- non-return valve
- with silencer
- suitable for continous flow water heaters
- material handles: metal
- connection dimension: DN15
- connection type: G ½
- centre distance: 150 ± 12 mm
- dirt filter included

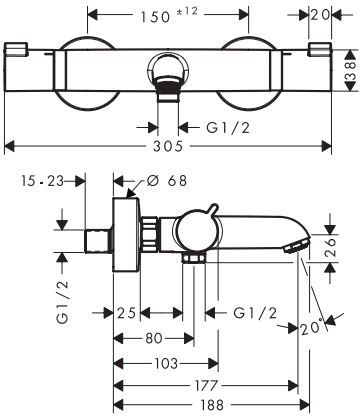

Sustainability

Water Flow Control

Technologies

Thermostat | Safety Stop | Quick Clean | AirPower

Certificates/declarations

EPD

Finish	Code no.
Chrome	13114000
Brushed Bronze	13114140
Brushed Black Chrome	13114340
Matt Black	13114670
Matt White	13114700
Polished Gold Optic	13114990

Ecostat Comfort Shower thermostat Care for exposed installation with extra long handles

Features

- larger print for greater clarity
- with extra long barrier-free handles
- 1 function
- thermostat cartridge, ceramic valve 180°
- maximum flow rate at 3 bar: 17 l/min
- min. operating pressure: 1 bar
- max. operating pressure: 10 bar
- Safety stop at 40 °C
- temperature limitation adjustable
- non-return valve
- with silencer
- material handles: metal
- centre distance: 150 ± 12 mm
- connection dimension: DN15
- connection type: S-connections, G ½
- dirt filter included

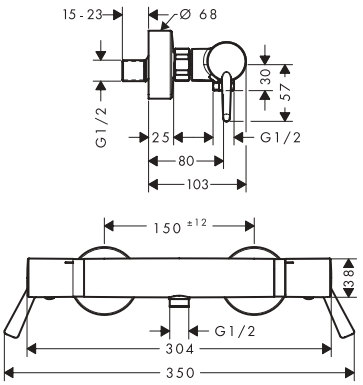

Sustainability

EcoStop | Water Flow Control

Technologies

Thermostat | Safety Stop

Certificates/declarations

EPD

Finish	Code no.
Chrome	13117000

Measurements within scale drawings are in mm.
Technical specifications and units of measure are subject to change.

Ecostat Comfort Bath thermostat Care for exposed installation with extra long handles

Features

- larger print for greater clarity
- with extra long barrier-free handles
- projection 172 - 177 mm
- 2 functions
- thermostat cartridge, shut-off/ diverter valve
- maximum flow rate at 3 bar: 20 l/min
- flow rate for bath spout at 3 bar: 20 l/min
- flow rate of hand shower at 3 bar: 16 l/min
- min. operating pressure: 1 bar
- max. operating pressure: 10 bar
- Safety stop at 40 °C
- temperature limitation adjustable
- non-return valve
- with silencer
- material handles: metal
- connection dimension: DN15
- connection type: G ½
- centre distance: 150 ± 12 mm
- dirt filter included

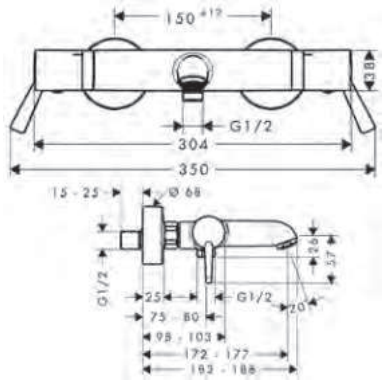

Sustainability

Water Flow Control

Technologies

Thermostat | Safety Stop 40°C | Quick Clean

Finish	Code no.
Chrome	13115000

Ecostat Element Shower thermostat for exposed installation

Features

- 1 function
- temperature and water flow control
- EcoStop+ button limits the water consumption to 6 l/min
- thermostat cartridge
- maximum flow rate at 3 bar: 17 l/min
- min. operating pressure: 1 bar
- max. operating pressure: 10 bar
- Safety stop at 40 °C
- temperature limitation adjustable
- non-return valve
- with silencer
- material handles: metal
- centre distance: 150 ± 12 mm
- connection dimension: DN15
- connection type: S-connections, G ½
- dirt filter included

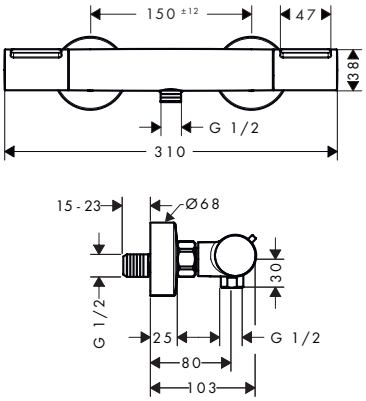

Sustainability

Water Flow Control

Technologies

Thermostat | Safety Stop 40°C

Finish	Code no.
Chrome	13346000
Matt Black	13346670

Measurements within scale drawings are in mm.
Technical specifications and units of measure are subject to change.

Ecostat Element Bath thermostat for exposed installation

Features

- projection 177 mm
- 2 functions
- temperature and water flow control
- thermostat cartridge, shut-off/ diverter valve
- spray type spout: normal spray
- maximum flow rate at 3 bar: 20 l/min
- flow rate for bath spout at 3 bar: 20 l/min
- flow rate of hand shower at 3 bar: 16 l/min
- min. operating pressure: 1 bar
- max. operating pressure: 10 bar
- Safety stop at 40 °C
- temperature limitation adjustable
- non-return valve
- protected against backflow, according to DIN EN 1717
- with silencer
- material handles: metal
- connection dimension: DN15
- connection type: G ½
- centre distance: 150 ± 12 mm
- dirt filter included

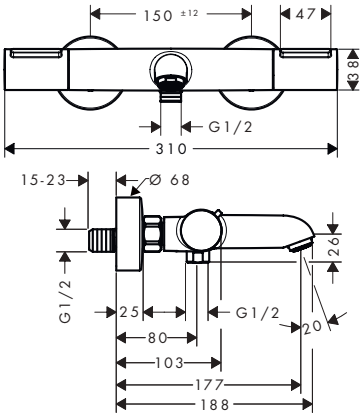

Sustainability

Technologies

Finish	Code no.
Chrome	13347000
Matt Black	13347670

Ecostat Fine Shower thermostat for exposed installation

Features

- 1 function
- temperature and water flow control
- EcoStop+ button limits the water consumption to 6 l/min
- thermostat cartridge
- maximum flow rate at 3 bar: 17 l/min
- min. operating pressure: 1 bar
- max. operating pressure: 10 bar
- Safety stop at 40 °C
- temperature limitation adjustable
- non-return valve
- with silencer
- material handles: metal
- centre distance: 150 ± 12 mm
- connection dimension: DN15
- connection type: S-connections, G ½
- dirt filter included

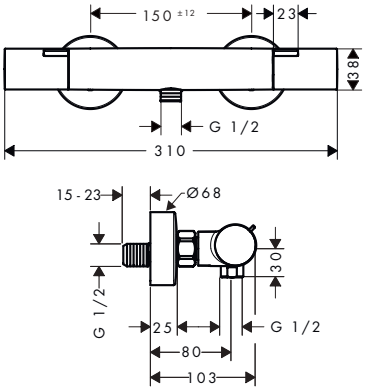

Sustainability

Technologies

Finish	Code no.
Chrome	13324000
Matt Black	13324670

Measurements within scale drawings are in mm.
Technical specifications and units of measure are subject to change.

Ecostat Fine Shower thermostat for exposed installation with temperature limiter

Features

- 1 function
- temperature and water flow control
- thermal disinfection with easy tooling
- EcoStop+ button limits the water consumption to 6 l/min
- thermostat cartridge
- Safety Stop locked at 40 °C
- temperature limitation adjustable
- the thermostat offers the possibility for thermal disinfection
- non-return valve
- with silencer
- material handles: metal
- centre distance: 150 ± 12 mm
- connection dimension: DN15
- connection type: S-connections, G ½
- dirt filter included

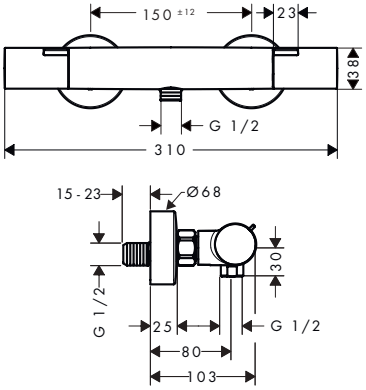

Sustainability

Technologies

Finish	Code no.
Chrome	13323000

Ecostat Fine Bath thermostat for exposed installation

Features

- projection 177 mm
- 2 functions
- temperature and water flow control
- thermostat cartridge, shut-off/ diverter valve
- spray type spout: normal spray
- maximum flow rate at 3 bar: 20 l/min
- flow rate for bath spout at 3 bar: 20 l/min
- flow rate of hand shower at 3 bar: 16 l/min
- min. operating pressure: 1 bar
- max. operating pressure: 10 bar
- Safety stop at 40 °C
- temperature limitation adjustable
- non-return valve
- protected against backflow, according to DIN EN 1717
- with silencer
- material handles: metal
- connection dimension: DN15
- connection type: G ½
- centre distance: 150 ± 12 mm
- dirt filter included

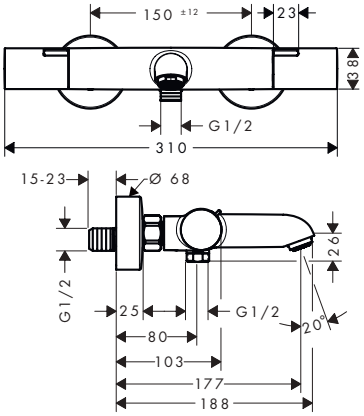

Sustainability

Technologies

Finish	Code no.
Chrome	13325000
Matt Black	13325670

Measurements within scale drawings are in mm.
Technical specifications and units of measure are subject to change.

Ecostat 1001 CL Shower thermostat for exposed installation

Features

- 1 function
- EcoStop button limits the water consumption to 10 l/min
- thermostat cartridge, ceramic valve 180°
- maximum flow rate at 3 bar: 16 l/min
- min. operating pressure: 1 bar
- max. operating pressure: 10 bar
- Safety stop at 40 °C
- temperature limitation adjustable
- the thermostat offers the possibility for thermal disinfection
- non-return valve
- with silencer
- suitable for continous flow water heaters
- material handles: metal
- centre distance: 150 ± 12 mm
- connection dimension: DN15
- connection type: S-connections, G ½
- dirt filter included

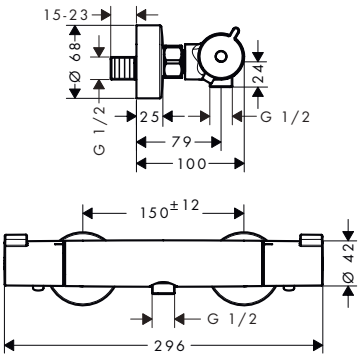

Sustainability

Technologies

Certificates/declarations

Finish	Code no.
Chrome	13211000

Ecostat 1001 CL Bath thermostat for exposed installation

Features

- projection 182 mm
- 2 functions
- thermostat cartridge, shut-off valve
- spray type spout: normal spray
- maximum flow rate at 3 bar: 20 l/min
- flow rate for bath spout at 3 bar: 20 l/min
- flow rate of hand shower at 3 bar: 16 l/min
- min. operating pressure: 1 bar
- max. operating pressure: 10 bar
- Safety stop at 40 °C
- temperature limitation adjustable
- with isolated water conduction
- non-return valve
- with automatic resetting
- with silencer
- material handles: metal
- connection dimension: DN15
- connection type: G ½
- centre distance: 150 ± 12 mm
- dirt filter included

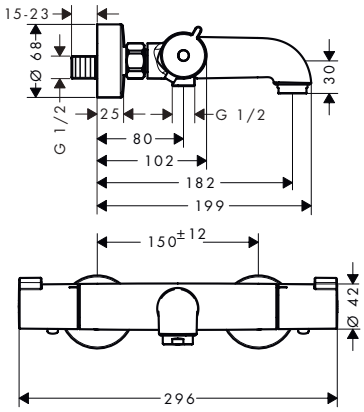

Sustainability

Technologies

Certificates/declarations

Finish	Code no.
Chrome	13201000

Ecostat universal Shower thermostat for exposed installation

Features

- 1 function
- EcoStop button limits the water consumption to 10 l/min
- thermostat cartridge, ceramic valve 180°
- maximum flow rate at 3 bar: 17 l/min
- min. operating pressure: 1 bar
- max. operating pressure: 10 bar
- Safety stop at 40 °C
- temperature limitation adjustable
- non-return valve
- with silencer
- material handles: plastic
- centre distance: 150 ± 12 mm
- connection dimension: DN15
- connection type: S-connections, G ½
- dirt filter included

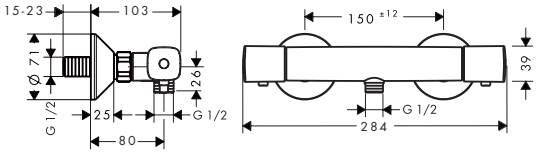

Sustainability

EcoStop | Water Flow Control

Technologies

Thermostat | Safety Stop

Certificates/declarations

EPD

Finish	Code no.
Chrome	13122000

Ecostat universal Bath thermostat for exposed installation

Features

- projection 194 mm
- 2 functions
- thermostat cartridge, shut-off/ diverter valve
- maximum flow rate at 3 bar: 20 l/min
- flow rate for bath spout at 3 bar: 20 l/min
- flow rate of hand shower at 3 bar: 16 l/min
- min. operating pressure: 1 bar
- max. operating pressure: 10 bar
- Safety stop at 40 °C
- temperature limitation adjustable
- non-return valve
- with silencer
- material handles: plastic
- connection dimension: DN15
- connection type: G ½
- centre distance: 150 ± 12 mm
- dirt filter included

Sustainability

Water Flow Control

Technologies

Thermostat | Safety Stop | Quick Clean | AirPower

Certificates/declarations

EPD

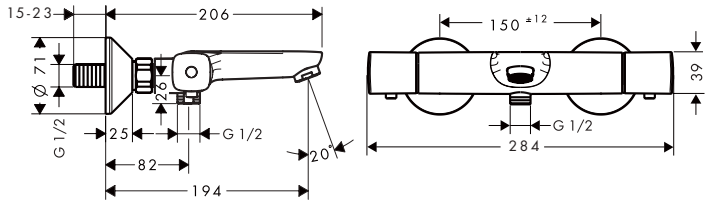

Finish	Code no.
Chrome	13123000

Measurements within scale drawings are in mm.
Technical specifications and units of measure are subject to change.

Ecostat Under-basin thermostat for exposed installation

Features

- 1 function
- min. operating pressure: 1 bar
- max. operating pressure: 5 bar
- temperature limitation adjustable
- the thermostat offers the possibility for thermal disinfection
- non-return valve
- connection dimension: G ⅜

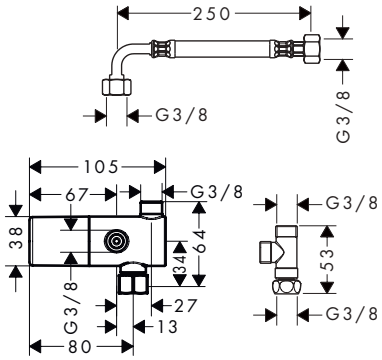

Technologies

Finish	Code no.
Chrome	15346000

Thermostats concealed installation

Thermostats concealed installation

	RainSelect		ShowerSelect Comfort S		
Finish					
Select	■	■	■	–	■
Safety lock at 40 degrees	■	■	■	■	■
Temperature limitation adjustable	■	■	■	■	■
Thermostat	■	■	■	■	■
Number of functions	2 - 5	2 - 5	1/2	1	1
from page	348	350	352	353	354

	ShowerSelect Comfort Q				ShowerSelect Glass
Finish					
Select	■	–	■	■	■
Safety lock at 40 degrees	■	■	■	–	■
Temperature limitation adjustable	■	■	■	–	■
Thermostat	■	■	■	–	■
Number of functions	1/2	1	1	3	1/2
from page	360	361	362	363	364

■ available depending on the model
– not available

	ShowerSelect Comfort S	ShowerSelect Comfort E			
Finish					
Select	■	■	■	■	■
Safety lock at 40 degrees	–	■	■	■	–
Temperature limitation adjustable	–	■	■	■	–
Thermostat	–	■	■	■	–
Number of functions	3	1/2	1	1	3
from page	355	356	357	358	359

	ShowerSelect Glass			ShowerSelect	
Finish					
Select	–	■	■	■	–
Safety lock at 40 degrees	■	■	–	■	■
Temperature limitation adjustable	■	■	–	■	■
Thermostat	■	■	–	■	■
Number of functions	1	1	3	1/2	1
from page	364	365	366	368	370

Thermostats concealed installation

	ShowerSelect			ShowerSelect S	
Finish					
Select	■	■	■	■	–
Safety lock at 40 degrees	■	–	–	■	■
Temperature limitation adjustable	■	–	■	■	■
Thermostat	■	–	–	■	■
Number of functions	1	3	1/2	1/2	1
from page	371	372	373	373	374

	Ecostat Square	Ecostat E		DuoTurn S	DuoTurn E
Finish					
Select	–	–	–	–	–
Safety lock at 40 degrees	■	■	■	–	–
Temperature limitation adjustable	■	■	■	–	–
Thermostat	■	■	■	–	–
Number of functions	1/2	1/2	1	1/2	1/2
from page	383	384	384	386	388

■ available depending on the model
– not available

	ShowerSelect S			Ecostat S	
Finish					
Select	■	■	■	–	–
Safety lock at 40 degrees	■	–	–	■	■
Temperature limitation adjustable	■	–	■	■	■
Thermostat	■	–	–	■	■
Number of functions	1	3	1/2	1/2	1
from page	375	375	376	379	380

	DuoTurn Q
Finish	
Select	–
Safety lock at 40 degrees	–
Temperature limitation adjustable	–
Thermostat	–
Number of functions	1/2
from page	389

Sustainability

Water flow control

The amount of water can be precisely adjusted via a control dial on the water-saving thermostat control, enabling you to use less water every day. Ideal also for children, who usually prefer gentle flow of water anyway.

Water flow control

This water volume can be precisely regulated, so you can use less of this precious resource. Individually adjustable for all those who usually find a gentle water flow more pleasant.

Technologies

Thermostat

Safe and reliable: The thermostat with integrated temperature control continuously monitors the water temperature while showering or bathing. It reacts quickly to changes in pressure and keeps the temperature comfortably at a constant level. For pleasant water enjoyment at all times.

SafetyStop

A temperature limitation that ensures safe showering pleasure at all times. The function prevents too hot water from coming out of the shower. The scald protection is a big safety plus, especially for children or people with restricted mobility.

Select

The Select push button simplifies daily bathroom routines, as one simple push is all it takes for water to flow or stop. When showering, the user-friendly button can change the spray type or switch from the overhead to the hand shower.

Finish

Black/
Chrome

-600

Brushed
Black
Chrome

-340

Brushed
Bronze

-140

Chrome

-000

Matt Black

-670

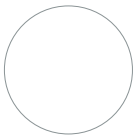

Matt White

-700

Polished Gold
Optic

-990

White/
Chrome

-400

RainSelect Thermostats for concealed installation

Features of all variants

- simultaneous use of several outlets
- depending on volume flow and installation situation approx. 50% flow rate reduction and integrated shut off function
- thermostat cartridge, Start/stop valve to operate the functions
- flow rate per outlet: 26 l/min
- flow rate by simultaneous use of all outlets: 38 l/min
- maximum flow rate at 3 bar: 38 l/min
- min. operating pressure: 1 bar
- max. operating pressure: 10 bar
- Safety stop at 40 °C
- temperature limitation adjustable
- non-return valve
- connection type: basic set

2 functions

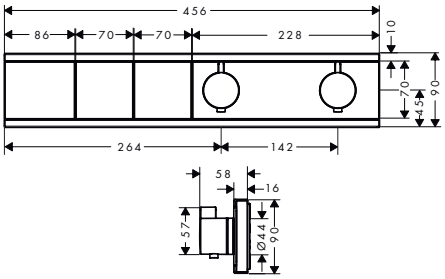

3 functions

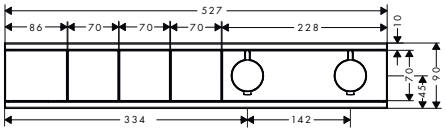

Sustainability

Water Flow Control

Technologies

Thermostat | Safety Stop 40°C | Select

Certificates/declarations

EPD

Overview variants

Number of functions	Max. flow rate at 3 bar (l/min)	Flow rate per user	Finish	Code no.
2 functions	38	26	Chrome	15380000
			Brushed Bronze	15380140
			Brushed Black Chrome	15380340
			Matt Black	15380670
			Matt White	15380700
			Polished Gold Optic	15380990
3 functions	38	26	Chrome	15381000
			Brushed Bronze	15381140
			Brushed Black Chrome	15381340
			Matt Black	15381670
			Matt White	15381700
			Polished Gold Optic	15381990

Required parts:	For	Code no.
RainSelect Basic set for 2 functions	15380XXX	15310180
RainSelect Basic set for 3 functions	15381XXX	15311180

Measurements within scale drawings are in mm.
Technical specifications and units of measure are subject to change.

RainSelect Thermostats for concealed installation

Features of all variants

- simultaneous use of several outlets
- depending on volume flow and installation situation approx. 50% flow rate reduction and integrated shut off function
- thermostat cartridge, Start/stop valve to operate the functions
- flow rate by simultaneous use of all outlets: 38 l/min
- maximum flow rate at 3 bar: 38 l/min
- min. operating pressure: 1 bar
- max. operating pressure: 10 bar
- Safety stop at 40 °C
- temperature limitation adjustable
- non-return valve
- connection type: basic set

4 functions

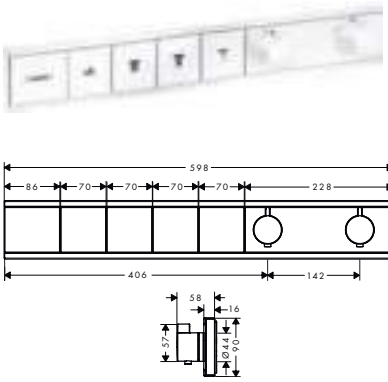

5 functions

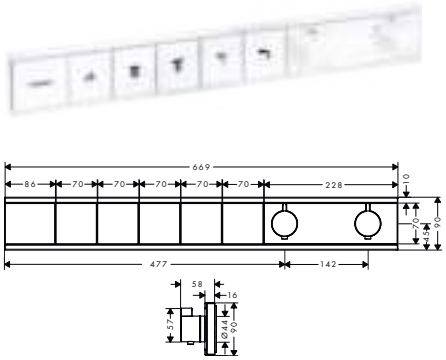

Sustainability

Water Flow Control

Technologies

Thermostat | Safety Stop 40°C | Select

Certificates/declarations

EPD

Overview variants

Number of functions	Max. flow rate at 3 bar (l/min)	Flow rate per user	Finish	Code no.
4 functions	38	26	Chrome	15382000
			Brushed Bronze	15382140
			Brushed Black Chrome	15382340
			Matt Black	15382670
			Matt White	15382700
			Polished Gold Optic	15382990
5 functions	38		Chrome	15384000
			Brushed Bronze	15384140
			Brushed Black Chrome	15384340
			Matt Black	15384670
			Matt White	15384700
			Polished Gold Optic	15384990

Required parts:	For	Code no.
RainSelect Basic set for 4 functions	15382XXX	15312180
RainSelect Basic set for 5 functions	15384XXX	15313180

Measurements within scale drawings are in mm.
Technical specifications and units of measure are subject to change.

RainSelect Thermostats for concealed installation

Features of all variants

- consists of: Thermostat, shower holder
- simultaneous use of several outlets
- depending on volume flow and installation situation approx. 50% flow rate reduction and integrated shut off function
- thermostat cartridge, Start/stop valve to operate the functions
- flow rate per outlet: 26 l/min
- flow rate by simultaneous use of all outlets: 38 l/min
- maximum flow rate at 3 bar: 38 l/min
- min. operating pressure: 1 bar
- max. operating pressure: 10 bar
- Safety stop at 40 °C
- temperature limitation adjustable
- non-return valve
- connection of shower hoses with conical and cylindrical nuts possible
- connection type: basic set

2 functions

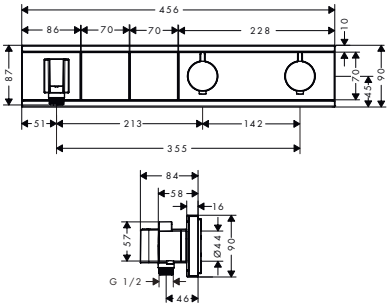

3 functions

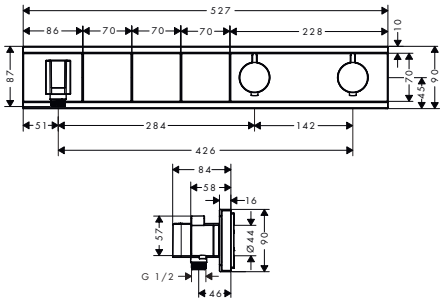

Sustainability

Water Flow Control

Technologies

Thermostat | Safety Stop 40°C | Select

Certificates/declarations

EPD

Overview variants

Number of functions	Max. flow rate at 3 bar (l/min)	Flow rate per user	Finish	Code no.
2 functions	38	26	Chrome	15355000
			White/Chrome	15355400
			Black/Chrome	15355600
3 functions	38	26	Chrome	15356000
			White/Chrome	15356400
			Black/Chrome	15356600

Required parts:	For	Code no.
RainSelect Basic set for 2 functions	15355XXX	15310180
RainSelect Basic set for 3 functions	15356XXX	15311180

Measurements within scale drawings are in mm.
Technical specifications and units of measure are subject to change.

RainSelect Thermostats for concealed installation

Features of all variants

- consists of: Thermostat, shower holder
- simultaneous use of several outlets
- depending on volume flow and installation situation approx. 50% flow rate reduction and integrated shut off function
- thermostat cartridge, Start/stop valve to operate the functions
- flow rate per outlet: 26 l/min
- flow rate by simultaneous use of all outlets: 38 l/min
- maximum flow rate at 3 bar: 38 l/min
- min. operating pressure: 1 bar
- max. operating pressure: 10 bar
- Safety stop at 40 °C
- temperature limitation adjustable
- non-return valve
- connection of shower hoses with conical and cylindrical nuts possible
- connection type: basic set

4 functions

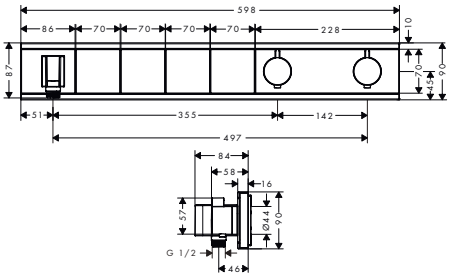

5 functions

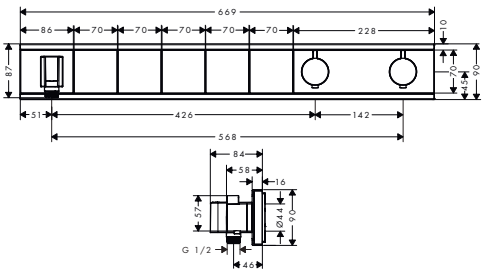

Sustainability

Water Flow Control

Technologies

Thermostat | Safety Stop 40°C | Select

Certificates/declarations

EPD

Overview variants

Number of functions	Max. flow rate at 3 bar (l/min)	Flow rate per user	Finish	Code no.
4 functions	38	26	Chrome	15357000
			White/Chrome	15357400
			Black/Chrome	15357600
5 functions	38	26	Chrome	15358000
			White/Chrome	15358400
			Black/Chrome	15358600

Required parts:	For	Code no.
RainSelect Basic set for 4 functions	15357XXX	15312180
RainSelect Basic set for 5 functions	15358XXX	15313180

Measurements within scale drawings are in mm.
Technical specifications and units of measure are subject to change.

ShowerSelect Comfort S Thermostat for concealed installation for 1 function

Features

- 1 function
- comfortable turning on / off of one outlet with large Select-paddle
- water flow control with stop function
- thermostat cartridge, Start/stop valve to operate the functions
- maximum flow rate at 3 bar: 20,3 l/min
- min. operating pressure: 1 bar
- max. operating pressure: 10 bar
- flat escutcheon for more space in the shower
- escutcheon can be aligned by +/- 3°
- easy installation due to pre-assembled function block, handles always at the same height regardless of the installation depth of the basic set
- Safety stop at 40 °C
- temperature limitation adjustable
- material button: metal
- material handles: metal
- connection type: basic set iBox universal 2 (# 01500180)
- thermostat is delivered with button On/Off

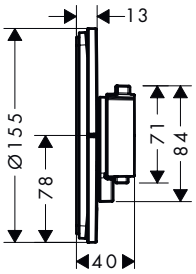

Sustainability

Technologies

Finish	Code no.
Chrome	15553000
Brushed Bronze	15553140
Brushed Black Chrome	15553340
Matt Black	15553670
Matt White	15553700

Required parts:	Code no.
iBox universal 2 Basic set	01500180

ShowerSelect Comfort S Thermostats for concealed installation for 2 functions

Features of all variants

- 2 functions
- simultaneous use of several outlets
- comfortable turning on / off of outlets with large Select-paddle
- water flow control with stop function
- min. operating pressure: 1 bar
- max. operating pressure: 10 bar
- escutcheon can be aligned by +/- 3°
- easy installation due to pre-assembled function block, handles always at the same height regardless of the installation depth of the basic set
- Safety stop at 40 °C
- temperature limitation adjustable
- the thermostat offers the possibility for thermal disinfection
- material button: metal
- material handles: metal
- connection type: basic set iBox universal 2 (# 01500180)
- thermostat is delivered with buttons Rain small, Rain large, hand sower, Waterfall, bath tub

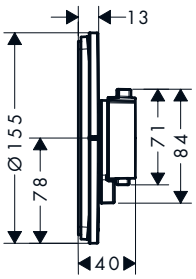

Sustainability

Technologies

Measurements within scale drawings are in mm.
Technical specifications and units of measure are subject to change.

ShowerSelect Comfort S Thermostats for concealed installation for 2 functions

Overview variants

Security combination EN 1717	Max. flow rate at 3 bar (l/min)	Finish	Code no.
–	22.1	Chrome	15554000
		Brushed Bronze	15554140
		Brushed Black Chrome	15554340
		Matt Black	15554670
		Matt White	15554700
■	26	Chrome	15556000
		Brushed Bronze	15556140
		Brushed Black Chrome	15556340
		Matt Black	15556670
		Matt White	15556700

Required parts:	Code no.
iBox universal 2 Basic set	01500180

ShowerSelect Comfort S Thermostat for concealed installation

Features

- 1 function
- temperature and water flow control
- water flow control with stop function
- thermostat cartridge
- flow rate upper outlet: 32 l/min
- flow rate lower outlet: 32 l/min
- flow rate by simultaneous use of all outlets: 34,8 l/min
- maximum flow rate at 3 bar: 34,8 l/min
- min. operating pressure: 1 bar
- max. operating pressure: 10 bar
- escutcheon can be aligned by +/- 3°
- easy installation due to pre-assembled function block, handles always at the same height regardless of the installation depth of the basic set
- Safety stop at 40 °C
- temperature limitation adjustable
- the thermostat offers the possibility for thermal disinfection
- material handles: metal
- connection type: basic set iBox universal 2 (# 01500180)

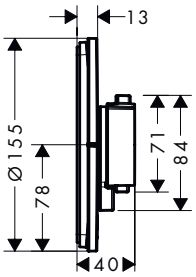

Sustainability

Technologies

Finish	Code no.
Chrome	15559000
Brushed Bronze	15559140
Brushed Black Chrome	15559340
Matt Black	15559670
Matt White	15559700

Required parts:	Code no.
iBox universal 2 Basic set	01500180

For more information about this product, please see the next page.

Measurements within scale drawings are in mm.
Technical specifications and units of measure are subject to change.

ShowerSelect Comfort S Thermostat for concealed installation

Optional parts:		Finish	Code no.
	ShowerSelect Comfort S Valve for concealed installation for 3 functions	Chrome	15558000
		Brushed Bronze	15558140
		Brushed Black Chrome	15558340
		Matt Black	15558670
		Matt White	15558700

ShowerSelect Comfort S Thermostat for concealed installation for 1 function and additional outlet

Features

- 1 function and 1 additional outlet
- comfortable turning on / off of one outlet with large Select-paddle
- water flow control with stop function
- thermostat cartridge, Start/stop valve to operate the functions
- flow rate upper outlet: 23 l/min
- flow rate lower outlet: 23 l/min
- maximum flow rate at 3 bar: 32,8 l/min
- min. operating pressure: 1 bar
- max. operating pressure: 10 bar
- flat escutcheon for more space in the shower
- escutcheon can be aligned by +/- 3 °
- easy installation due to pre-assembled function block, handles always at the same height regardless of the installation depth of the basic set
- Safety stop at 40 °C
- temperature limitation adjustable
- the thermostat offers the possibility for thermal disinfection
- material button: metal
- material handles: metal
- connection type: basic set iBox universal 2 (# 01500180)
- thermostat is delivered with buttons Rain small, Rain large, hand sower, Waterfall, bath tub

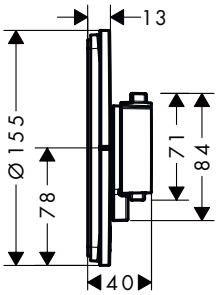

Sustainability

Technologies

Finish	Code no.
Chrome	15562000
Brushed Bronze	15562140
Brushed Black Chrome	15562340
Matt Black	15562670
Matt White	15562700

Required parts:		Code no.
	iBox universal 2 Basic set	01500180

Optional parts:		Finish	Code no.
	ShowerSelect Comfort S Valve for concealed installation for 3 functions	Chrome	15558000
		Brushed Bronze	15558140
		Brushed Black Chrome	15558340
		Matt Black	15558670
		Matt White	15558700

Measurements within scale drawings are in mm.
Technical specifications and units of measure are subject to change.

ShowerSelect Comfort S Valve for concealed installation for 3 functions

Features

- 3 functions
- use of outlets: simultaneous use of several outlets
- comfortable turning on / off of outlets with large Select-paddle
- Start/stop valve to operate the functions
- mounting type: wall-mounted
- flow rate upper outlet: 26 l/min
- Flow rate left and right: 26 l/min
- maximum flow rate at 3 bar: 32 l/min
- min. operating pressure: 1 bar
- max. operating pressure: 10 bar
- installation orientation: escutcheon can be aligned by +/- 3°
- installation instructions: easy installation due to pre-assembled function block
- Button: valve is delivered with buttons Rain small, Rain large, hand sower, Waterfall, bath tub

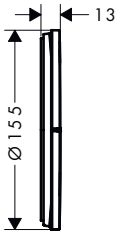

Finish	Code no.
Chrome	15558000
Brushed Bronze	15558140
Brushed Black Chrome	15558340
Matt Black	15558670
Matt White	15558700

Required parts:		Code no.
	iBox universal 2 Basic set	01500180

Optional parts:		Finish	Code no.
	ShowerSelect Comfort S Thermostat for concealed installation	Chrome	15559000
		Brushed Bronze	15559140
		Brushed Black Chrome	15559340
		Matt Black	15559670
		Matt White	15559700
	ShowerSelect Comfort S Thermostat for concealed installation for 1 function and additional outlet	Chrome	15562000
		Brushed Bronze	15562140
		Brushed Black Chrome	15562340
		Matt Black	15562670
		Matt White	15562700

ShowerSelect Comfort E Thermostat for concealed installation for 1 function

Features

- 1 function
- comfortable turning on / off of one outlet with large Select-paddle, precise temperature control thanks to vertical handle structure and haptic feedback from the thermostat handle
- water flow control with stop function
- thermostat cartridge, Start/stop valve to operate the functions
- maximum flow rate at 3 bar: 20,3 l/min
- min. operating pressure: 1 bar
- max. operating pressure: 10 bar
- flat escutcheon for more space in the shower
- escutcheon can be aligned by +/- 3 °
- easy installation due to pre-assembled function block, handles always at the same height regardless of the installation depth of the basic set
- Safety stop at 40 °C
- temperature limitation adjustable
- the thermostat offers the possibility for thermal disinfection
- material button: metal
- material handles: metal
- connection type: basic set iBox universal 2 (# 01500180)
- thermostat is delivered with button On/Off

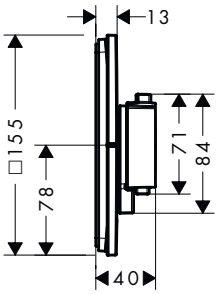

Sustainability

Water Flow Control

Technologies

Thermostat | Safety Stop 40°C | Select

Finish	Code no.
Chrome	15571000
Brushed Bronze	15571140
Brushed Black Chrome	15571340
Matt Black	15571670
Matt White	15571700

Required parts:	Code no.
iBox universal 2 Basic set	01500180

ShowerSelect Comfort E Thermostats for concealed installation for 2 functions

Features of all variants

- simultaneous use of several outlets
- water flow control with stop function
- thermostat cartridge, Start/stop valve to operate the functions
- min. operating pressure: 1 bar
- max. operating pressure: 10 bar
- escutcheon can be aligned by +/- 3 °
- easy installation due to pre-assembled function block, handles always at the same height regardless of the installation depth of the basic set
- Safety stop at 40 °C
- temperature limitation adjustable
- the thermostat offers the possibility for thermal disinfection
- material button: metal
- material handles: metal
- connection type: basic set iBox universal 2 (# 01500180)
- thermostat is delivered with buttons Rain small, Rain large, hand sower, Waterfall, bath tub

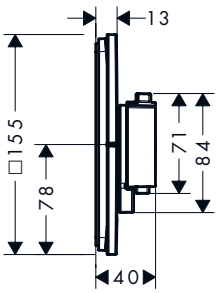

Sustainability

Water Flow Control

Technologies

Thermostat | Safety Stop 40°C | Select

Measurements within scale drawings are in mm.
Technical specifications and units of measure are subject to change.

ShowerSelect Comfort E Thermostats for concealed installation for 2 functions

Overview variants

Security combination EN 1717	Max. flow rate at 3 bar (l/min)	Finish	Code no.
–	22.1	Chrome	15572000
		Brushed Bronze	15572140
		Brushed Black Chrome	15572340
		Matt Black	15572670
		Matt White	15572700
■	26	Chrome	15578000
		Brushed Bronze	15578140
		Brushed Black Chrome	15578340
		Matt Black	15578670
		Matt White	15578700

Required parts:	Code no.
iBox universal 2 Basic set	01500180

ShowerSelect Comfort E Thermostat for concealed installation

Features

- 1 function
- temperature and water flow control
- water flow control with stop function
- thermostat cartridge
- flow rate upper outlet: 32 l/min
- flow rate lower outlet: 32 l/min
- flow rate by simultaneous use of all outlets: 34,8 l/min
- maximum flow rate at 3 bar: 34,8 l/min
- min. operating pressure: 1 bar
- max. operating pressure: 10 bar
- escutcheon can be aligned by +/- 3°
- easy installation due to pre-assembled function block, handles always at the same height regardless of the installation depth of the basic set
- Safety stop at 40 °C
- temperature limitation adjustable
- the thermostat offers the possibility for thermal disinfection
- material handles: metal
- connection type: basic set iBox universal 2 (# 01500180)

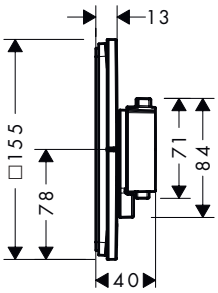

Sustainability

Water Flow Control

Technologies

Thermostat | Safety Stop | Select

Finish	Code no.
Chrome	15574000
Brushed Bronze	15574140
Brushed Black Chrome	15574340
Matt Black	15574670
Matt White	15574700

Required parts:	Code no.
iBox universal 2 Basic set	01500180

For more information about this product, please see the next page.

ShowerSelect Comfort E Thermostat for concealed installation

Optional parts:		Finish	Code no.
	ShowerSelect Comfort E Valve for concealed installation for 3 functions	Chrome	15573000
		Brushed Bronze	15573140
		Brushed Black Chrome	15573340
		Matt Black	15573670
		Matt White	15573700

ShowerSelect Comfort E Thermostat for concealed installation for 1 function and additional outlet

Features

- 1 function and 1 additional outlet
- comfortable turning on / off of one outlet with large Select-paddle
- water flow control with stop function
- thermostat cartridge, Start/stop valve to operate the functions
- flow rate upper outlet: 23 l/min
- flow rate lower outlet: 23 l/min
- maximum flow rate at 3 bar: 32,8 l/min
- min. operating pressure: 1 bar
- max. operating pressure: 10 bar
- escutcheon can be aligned by +/- 3°
- easy installation due to pre-assembled function block, handles always at the same height regardless of the installation depth of the basic set
- Safety stop at 40 °C
- temperature limitation adjustable
- the thermostat offers the possibility for thermal disinfection
- material button: metal
- material handles: metal
- connection type: basic set iBox universal 2 (# 01500180)
- thermostat is delivered with buttons Rain small, Rain large, hand sower, Waterfall, bath tub

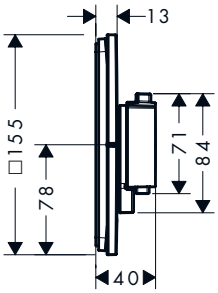

Sustainability

Technologies

Finish	Code no.
Chrome	15575000
Brushed Bronze	15575140
Brushed Black Chrome	15575340
Matt Black	15575670
Matt White	15575700

Required parts:		Code no.
	iBox universal 2 Basic set	01500180

Optional parts:		Finish	Code no.
	ShowerSelect Comfort E Valve for concealed installation for 3 functions	Chrome	15573000
		Brushed Bronze	15573140
		Brushed Black Chrome	15573340
		Matt Black	15573670
		Matt White	15573700

Measurements within scale drawings are in mm.
Technical specifications and units of measure are subject to change.

ShowerSelect Comfort E Valve for concealed installation for 3 functions

Features

- 3 functions
- use of outlets: simultaneous use of several outlets
- comfortable turning on / off of outlets with large Select-paddle
- Start/stop valve to operate the functions
- mounting type: wall-mounted
- flow rate upper outlet: 26 l/min
- Flow rate left and right: 26 l/min
- maximum flow rate at 3 bar: 32 l/min
- min. operating pressure: 1 bar
- max. operating pressure: 10 bar
- installation orientation: escutcheon can be aligned by +/- 3°
- installation instructions: easy installation due to pre-assembled function block
- Button: valve is delivered with buttons Rain small, Rain large, hand sower, Waterfall, bath tub
- material button: metal
- additional comment: flat escutcheon for more space in the shower

Finish	Code no.
Chrome	15573000
Brushed Bronze	15573140
Brushed Black Chrome	15573340
Matt Black	15573670
Matt White	15573700

Required parts:		Code no.
	iBox universal 2 Basic set	01500180

Optional parts:		Finish	Code no.
	ShowerSelect Comfort E Thermostat for concealed installation	Chrome	15574000
		Brushed Bronze	15574140
		Brushed Black Chrome	15574340
		Matt Black	15574670
		Matt White	15574700
	ShowerSelect Comfort E Thermostat for concealed installation for 1 function and additional outlet	Brushed Bronze	15575140
		Brushed Black Chrome	15575340
		Matt Black	15575670
		Matt White	15575700

ShowerSelect Comfort Q Thermostat for concealed installation for 1 function

Features

- 1 function
- comfortable turning on / off of one outlet with large Select-paddle
- water flow control with stop function
- thermostat cartridge, Start/stop valve to operate the functions
- maximum flow rate at 3 bar: 20,3 l/min
- min. operating pressure: 1 bar
- max. operating pressure: 10 bar
- flat escutcheon for more space in the shower
- escutcheon can be aligned by +/- 3 °
- easy installation due to pre-assembled function block, handles always at the same height regardless of the installation depth of the basic set
- Safety stop at 40 °C
- temperature limitation adjustable
- the thermostat offers the possibility for thermal disinfection
- material button: metal
- material handles: metal
- connection type: basic set iBox universal 2 (# 01500180)
- thermostat is delivered with button On/Off

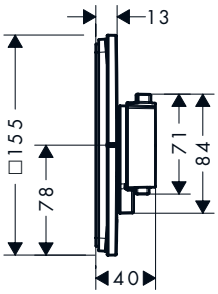

Sustainability

Technologies

Finish	Code no.
Chrome	15581000
Brushed Bronze	15581140
Brushed Black Chrome	15581340
Matt Black	15581670
Matt White	15581700

Required parts:	Code no.
iBox universal 2 Basic set	01500180

ShowerSelect Comfort Q Thermostats for concealed installation for 2 functions

Features of all variants

- 2 functions
- simultaneous use of several outlets
- comfortable turning on / off of outlets with large Select-paddle
- water flow control with stop function
- thermostat cartridge, Start/stop valve to operate the functions
- min. operating pressure: 1 bar
- max. operating pressure: 10 bar
- flat escutcheon for more space in the shower
- escutcheon can be aligned by +/- 3 °
- easy installation due to pre-assembled function block, handles always at the same height regardless of the installation depth of the basic set
- Safety stop at 40 °C
- temperature limitation adjustable
- the thermostat offers the possibility for thermal disinfection
- material button: metal
- material handles: metal
- connection type: basic set iBox universal 2 (# 01500180)
- thermostat is delivered with buttons Rain small, Rain large, hand sower, Waterfall, bath tub

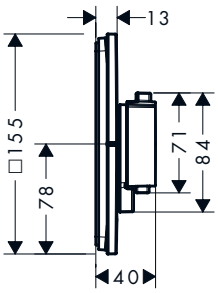

Sustainability

Technologies

Measurements within scale drawings are in mm.
Technical specifications and units of measure are subject to change.

ShowerSelect Comfort Q Thermostats for concealed installation for 2 functions

Overview variants

Security combination EN 1717	Max. flow rate at 3 bar (l/min)	Finish	Code no.
–	22.1	Chrome	15583000
		Brushed Bronze	15583140
		Brushed Black Chrome	15583340
		Matt Black	15583670
		Matt White	15583700
■	26	Chrome	15586000
		Brushed Bronze	15586140
		Brushed Black Chrome	15586340
		Matt Black	15586670
		Matt White	15586700

Required parts:	Code no.
iBox universal 2 Basic set	01500180

ShowerSelect Comfort Q Thermostat for concealed installation

Features

- 1 function
- temperature and water flow control
- water flow control with stop function
- thermostat cartridge
- flow rate upper outlet: 32 l/min
- flow rate lower outlet: 32 l/min
- flow rate by simultaneous use of all outlets: 34,8 l/min
- maximum flow rate at 3 bar: 34,8 l/min
- min. operating pressure: 1 bar
- max. operating pressure: 10 bar
- flat escutcheon for more space in the shower
- escutcheon can be aligned by +/- 3°
- easy installation due to pre-assembled function block, handles always at the same height regardless of the installation depth of the basic set
- Safety stop at 40 °C
- temperature limitation adjustable
- the thermostat offers the possibility for thermal disinfection
- material handles: metal
- connection type: basic set iBox universal 2 (# 01500180)

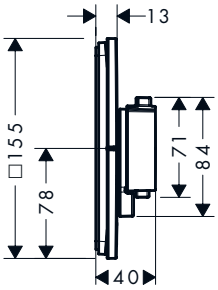

Sustainability

Technologies

Finish	Code no.
Chrome	15588000
Brushed Bronze	15588140
Brushed Black Chrome	15588340
Matt Black	15588670
Matt White	15588700

Required parts:	Code no.
iBox universal 2 Basic set	01500180

For more information about this product, please see the next page.

Measurements within scale drawings are in mm.
Technical specifications and units of measure are subject to change.

ShowerSelect Comfort Q Thermostat for concealed installation

Optional parts:		Finish	Code no.
	ShowerSelect Comfort Q Valve for concealed installation for 3 functions	Chrome	15587000
		Brushed Bronze	15587140
		Brushed Black Chrome	15587340
		Matt Black	15587670
		Matt White	15587700

ShowerSelect Comfort Q Thermostat for concealed installation for 1 function and additional outlet

Features

- 1 function and 1 additional outlet
- comfortable turning on / off of one outlet with large Select-paddle
- water flow control with stop function
- thermostat cartridge, Start/stop valve to operate the functions
- flow rate upper outlet: 23 l/min
- flow rate lower outlet: 23 l/min
- maximum flow rate at 3 bar: 32,8 l/min
- min. operating pressure: 1 bar
- max. operating pressure: 10 bar
- flat escutcheon for more space in the shower
- escutcheon can be aligned by +/- 3 °
- easy installation due to pre-assembled function block, handles always at the same height regardless of the installation depth of the basic set
- Safety stop at 40 °C
- temperature limitation adjustable
- the thermostat offers the possibility for thermal disinfection
- material button: metal
- material handles: metal
- connection type: basic set iBox universal 2 (# 01500180)
- thermostat is delivered with buttons Rain small, Rain large, hand sower, Waterfall, bath tub

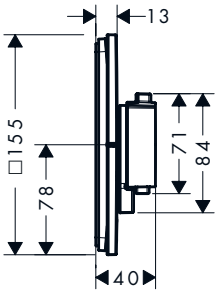

Sustainability

Technologies

Finish	Code no.
Chrome	15589000
Brushed Bronze	15589140
Brushed Black Chrome	15589340
Matt Black	15589670
Matt White	15589700

Required parts:		Code no.
	iBox universal 2 Basic set	01500180

Optional parts:		Finish	Code no.
	ShowerSelect Comfort Q Valve for concealed installation for 3 functions	Chrome	15587000
		Brushed Bronze	15587140
		Brushed Black Chrome	15587340
		Matt Black	15587670
		Matt White	15587700

Measurements within scale drawings are in mm.
Technical specifications and units of measure are subject to change.

ShowerSelect Comfort Q Valve for concealed installation for 3 functions

Features

- 3 functions
- use of outlets: simultaneous use of several outlets
- comfortable turning on / off of outlets with large Select-paddle
- Start/stop valve to operate the functions
- mounting type: wall-mounted
- flow rate upper outlet: 26 l/min
- Flow rate left and right: 26 l/min
- maximum flow rate at 3 bar: 32 l/min
- min. operating pressure: 1 bar
- max. operating pressure: 10 bar
- installation orientation: escutcheon can be aligned by +/- 3°
- installation instructions: easy installation due to pre-assembled function block, handles always at the same height regardless of the installation depth of the basic set
- Button: valve is delivered with buttons Rain small, Rain large, hand sower, Waterfall, bath tub
- additional comment: flat escutcheon for more space in the shower

Finish	Code no.
Chrome	15587000
Brushed Bronze	15587140
Brushed Black Chrome	15587340
Matt Black	15587670
Matt White	15587700

Required parts:		Code no.
	iBox universal 2 Basic set	01500180

Optional parts:		Finish	Code no.
	ShowerSelect Comfort Q Thermostat for concealed installation	Chrome	15588000
		Brushed Bronze	15588140
		Brushed Black Chrome	15588340
		Matt Black	15588670
		Matt White	15588700
	ShowerSelect Comfort Q Thermostat for concealed installation for 1 function and additional outlet	Chrome	15589000
		Brushed Bronze	15589140
		Brushed Black Chrome	15589340
		Matt Black	15589670
		Matt White	15589700

ShowerSelect Glass Thermostats for concealed installation

Features of all variants

- thermostat cartridge, Start/stop valve to operate the functions
- min. operating pressure: 1 bar
- max. operating pressure: 10 bar
- Safety stop at 40 °C
- temperature limitation adjustable
- connection type: basic set

1 function

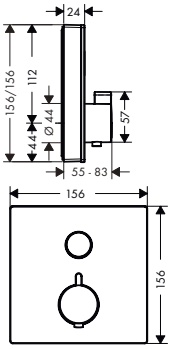

2 functions

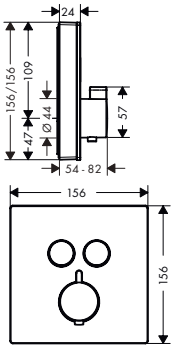

Technologies

Thermostat | Safety Stop | Select

Certificates/declarations

EPD

Overview variants

Number of functions	Max. flow rate at 3 bar (l/min)	Finish	Code no.
1 function	26.7	White/Chrome	15737400
2 functions	29.7	White/Chrome	15738400

Required parts (choose one):			Code no.
Option 1		iBox universal 2 Basic set	01500180
	+	Adapter plate for iBox universal 2	13588000
Option 2		iBox universal Basic set	01800180

ShowerSelect Glass Thermostat HighFlow for concealed installation

Features

- 1 function
- thermostat cartridge
- flow rate upper outlet: 42 l/min
- flow rate lower outlet: 42 l/min
- maximum flow rate at 3 bar: 42 l/min
- min. operating pressure: 1 bar
- max. operating pressure: 10 bar
- Safety stop at 40 °C
- temperature limitation adjustable
- connection type: basic set
- dirt filter included

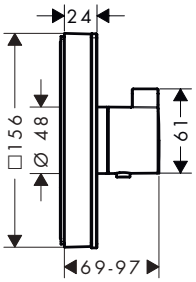

Technologies

Thermostat | Safety Stop

Certificates/declarations

EPD

Finish	Code no.
White/Chrome	15734400

Measurements within scale drawings are in mm.
Technical specifications and units of measure are subject to change.

ShowerSelect Glass Thermostat HighFlow for concealed installation

Required parts (choose one):			Code no.
Option 1		iBox universal 2 Basic set	01500180
	+	Adapter plate for iBox universal 2	13588000
Option 2		iBox universal Basic set	01800180

Optional parts:		Finish	Code no.
	ShowerSelect Glass Valve for concealed installation for 3 functions	White/Chrome	15736400

ShowerSelect Glass Thermostat HighFlow for concealed installation for 1 function and additional outlet

Features

- 1 function and 1 additional outlet
- Select push-button on/off control for 1 outlet
- thermostat cartridge, Start/stop valve to operate the functions
- flow rate of hand shower at 3 bar: 34 l/min
- flow rate upper outlet: 59 l/min
- maximum flow rate at 3 bar: 59 l/min
- min. operating pressure: 1 bar
- max. operating pressure: 10 bar
- Safety stop at 40 °C
- temperature limitation adjustable
- connection type: basic set
- dirt filter included
- thermostat is delivered with button hand shower

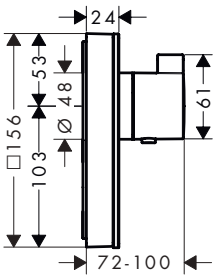

Technologies

Certificates/declarations

Finish	Code no.
White/Chrome	15735400

Required parts (choose one):			Code no.
Option 1		iBox universal 2 Basic set	01500180
	+	Adapter plate for iBox universal 2	13588000
Option 2		iBox universal Basic set	01800180

Optional parts:		Finish	Code no.
	ShowerSelect Glass Valve for concealed installation for 3 functions	White/Chrome	15736400

Measurements within scale drawings are in mm.
Technical specifications and units of measure are subject to change.

ShowerSelect Glass Valve for concealed installation for 3 functions

Features

- 3 functions
- use of outlets: simultaneous use of several outlets
- Start/stop valve to operate the functions
- mounting type: wall-mounted
- flow rate upper outlet: 26 l/min
- Flow rate left and right: 29 l/min
- maximum flow rate at 3 bar: 30 l/min
- Button: Valve is delivered with buttons Waterfall, Rain large, MonoRain

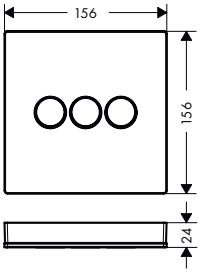

Certificates/declarations

EPD

Finish	Code no.
White/Chrome	15736400

Required parts (choose one):			Code no.
Option 1		iBox universal 2 Basic set	01500180
	+	Adapter plate for iBox universal 2	13588000
Option 2		iBox universal Basic set	01800180

Optional parts:		Finish	Code no.
	ShowerSelect Glass Thermostat HighFlow for concealed installation	White/Chrome	15734400
	ShowerSelect Glass Thermostat HighFlow for concealed installation for 1 function and additional outlet	White/Chrome	15735400

Symbol ON/OFF

Finish	Code no.
White	92579450
Black	92579610

Symbol handshower

Finish	Code no.
White	92573450
Black	92573610

Measurements within scale drawings are in mm.
Technical specifications and units of measure are subject to change.

Symbol showerhead Rain large

Finish	Code no.
White	92571450
Black	92571610

Symbol showerhead Rain small

Finish	Code no.
White	92572450
Black	92572610

Symbol Rain Flow

Finish	Code no.
White	92574450
Black	92574610

Symbol Whirl

Finish	Code no.
White	92575450
Black	92575610

Symbol Mono

Finish	Code no.
White	92576450
Black	92576610

Symbol Tub

Finish	Code no.
White	92577450
Black	92577610

Symbol Body spray

Finish	Code no.
White	92578450
Black	92578610

ShowerSelect Thermostats for concealed installation

Features of all variants

- thermostat cartridge, Start/stop valve to operate the functions
- min. operating pressure: 1 bar
- max. operating pressure: 10 bar
- Safety stop at 40 °C
- temperature limitation adjustable
- connection type: basic set

1 function

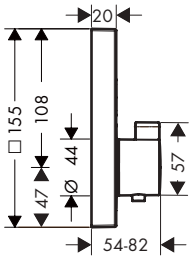

2 functions

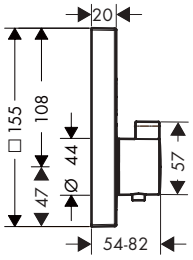

Technologies

Thermostat · Safety Stop · Select

Certificates/declarations

EPD

Overview variants

Number of functions	Max. flow rate at 3 bar (l/min)	Finish	Code no.
1 function	26.7	Chrome	15762000
2 functions	29.7	Chrome	15763000
		Brushed Bronze	15763140
		Brushed Black Chrome	15763340
		Matt Black	15763670
		Matt White	15763700
		Polished Gold Optic	15763990

Required parts (choose one):			Code no.
Option 1		iBox universal 2 Basic set	01500180
	+	Adapter plate for iBox universal 2	13588000
Option 2		iBox universal Basic set	01800180

Measurements within scale drawings are in mm.
Technical specifications and units of measure are subject to change.

ShowerSelect Thermostat for concealed installation for 2 functions with hose connection and shower holder

Features

- consists of: Thermostat, shower holder
- 2 functions
- simultaneous use of several outlets
- Select push-button on/off control for 2 outlets
- thermostat cartridge, Start/stop valve to operate the functions
- flow rate of hand shower at 3 bar: 14 l/min
- flow rate upper outlet: 29 l/min
- maximum flow rate at 3 bar: 29 l/min
- min. operating pressure: 1 bar
- max. operating pressure: 10 bar
- Safety stop at 40 °C
- temperature limitation adjustable
- for shower hoses with a conical nut
- connection type: basic set
- thermostat is delivered with buttons hand shower and Rain large

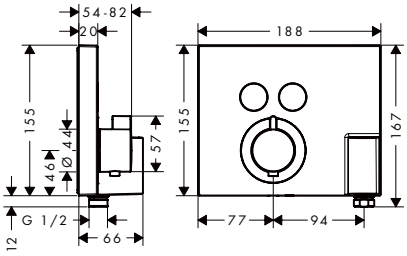

Technologies

Certificates/declarations

Finish	Code no.
Chrome	15765000

Required parts (choose one):			Code no.
Option 1		iBox universal 2 Basic set	01500180
+		Adapter plate for iBox universal 2	13588000
Option 2		iBox universal Basic set	01800180

ShowerSelect Thermostat HighFlow for concealed installation

Features

- 1 function
- thermostat cartridge
- flow rate upper outlet: 42 l/min
- flow rate lower outlet: 42 l/min
- maximum flow rate at 3 bar: 42 l/min
- min. operating pressure: 1 bar
- max. operating pressure: 10 bar
- Safety stop at 40 °C
- temperature limitation adjustable
- connection type: basic set
- dirt filter included

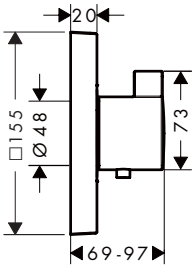

Technologies

Thermostat | Safety Stop

Certificates/declarations

EPD

Finish	Code no.
Chrome	15760000
Brushed Bronze	15760140
Brushed Black Chrome	15760340
Matt Black	15760670
Matt White	15760700
Polished Gold Optic	15760990

Required parts (choose one):			Code no.
Option 1		iBox universal 2 Basic set	01500180
	+	Adapter plate for iBox universal 2	13588000
Option 2		iBox universal Basic set	01800180

Optional parts:		Finish	Code no.
	ShowerSelect Valve for concealed installation for 3 functions	Chrome	15764000
		Brushed Bronze	15764140
		Brushed Black Chrome	15764340
		Matt Black	15764670
		Matt White	15764700
		Polished Gold Optic	15764990

Measurements within scale drawings are in mm.
Technical specifications and units of measure are subject to change.

ShowerSelect Thermostat HighFlow for concealed installation for 1 function and additional outlet

Features

- 1 function and 1 additional outlet
- Select push-button on/off control for 1 outlet
- thermostat cartridge, Start/stop valve to operate the functions
- flow rate of hand shower at 3 bar: 34 l/min
- flow rate upper outlet: 59 l/min
- maximum flow rate at 3 bar: 59 l/min
- min. operating pressure: 1 bar
- max. operating pressure: 10 bar
- Safety stop at 40 °C
- temperature limitation adjustable
- connection type: basic set
- dirt filter included
- thermostat is delivered with button hand shower

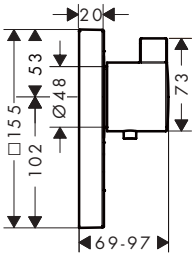

Technologies

Certificates/declarations

Finish	Code no.
Chrome	15761000

Required parts (choose one):			Code no.
Option 1		iBox universal 2 Basic set	01500180
+		Adapter plate for iBox universal 2	13588000
Option 2		iBox universal Basic set	01800180

Optional parts:		Finish	Code no.
	ShowerSelect Valve for concealed installation for 3 functions	Chrome	15764000

Measurements within scale drawings are in mm.
Technical specifications and units of measure are subject to change.

ShowerSelect Valve for concealed installation for 3 functions

Features

- 3 functions
- use of outlets: simultaneous use of several outlets
- Start/stop valve to operate the functions
- mounting type: wall-mounted
- flow rate upper outlet: 26 l/min
- Flow rate left and right: 29 l/min
- maximum flow rate at 3 bar: 30 l/min
- Button: valve is delivered with buttons Rain large, Rain small and hand shower

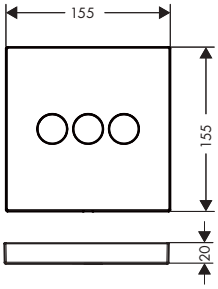

Certificates/declarations

Finish	Code no.
Chrome	15764000
Brushed Bronze	15764140
Brushed Black Chrome	15764340
Matt Black	15764670
Matt White	15764700
Polished Gold Optic	15764990

Required parts (choose one):			Code no.
Option 1		iBox universal 2 Basic set	01500180
	+	Adapter plate for iBox universal 2	13588000
Option 2		iBox universal Basic set	01800180

Optional parts:		Finish	Code no.
	ShowerSelect Thermostat HighFlow for concealed installation	Chrome	15760000
		Brushed Bronze	15760140
		Brushed Black Chrome	15760340
		Matt Black	15760670
		Matt White	15760700
		Polished Gold Optic	15760990
	ShowerSelect Thermostat HighFlow for concealed installation for 1 function and additional outlet	Chrome	15761000

Measurements within scale drawings are in mm.
Technical specifications and units of measure are subject to change.

ShowerSelect Mixers for concealed installation

Features of all variants

- Start/stop valve to operate the functions
- temperature limitation adjustable
- min. operating pressure: 1 bar
- max. operating pressure: 10 bar
- mixer is delivered with button On/Off
- connection type: basic set

1 function

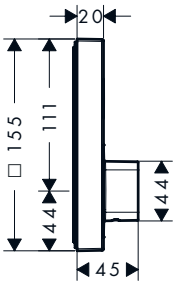

2 functions

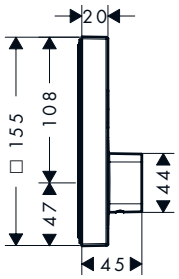

Sustainability

Technologies

Certificates/declarations

Overview variants

Number of functions	Max. flow rate at 3 bar (l/min)	Finish	Code no.
1 function	21	Chrome	15767000
2 functions	22	Chrome	15768000

Required parts (choose one):			Code no.
Option 1		iBox universal 2 Basic set	01500180
	+	Adapter plate for iBox universal 2	13588000
Option 2		iBox universal Basic set	01800180

ShowerSelect S Thermostats for concealed installation

Features of all variants

- thermostat cartridge, Start/stop valve to operate the functions
- min. operating pressure: 1 bar
- max. operating pressure: 10 bar
- Safety stop at 40 °C
- temperature limitation adjustable
- connection type: basic set

1 function

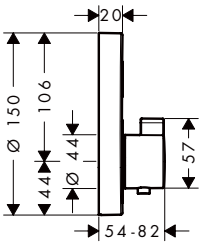

2 functions

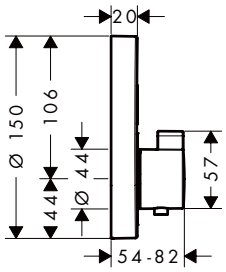

Technologies

Certificates/declarations

Overview variants

Number of functions	Max. flow rate at 3 bar (l/min)	Finish	Code no.
1 function	26.7	Chrome	15744000

For more information about this product, please see the next page.

Measurements within scale drawings are in mm.
Technical specifications and units of measure are subject to change.

ShowerSelect S Thermostats for concealed installation

Overview variants

Number of functions	Max. flow rate at 3 bar (l/min)	Finish	Code no.
2 functions	29.7	Chrome	15743000
		Brushed Bronze	15743140
		Brushed Black Chrome	15743340
		Matt Black	15743670
		Matt White	15743700
		Polished Gold Optic	15743990

Required parts (choose one):			Code no.
Option 1		iBox universal 2 Basic set	01500180
	+	Adapter plate for iBox universal 2	13588000
Option 2		iBox universal Basic set	01800180

ShowerSelect S Thermostat HighFlow for concealed installation

Features

- 1 function
- thermostat cartridge
- flow rate upper outlet: 42 l/min
- flow rate lower outlet: 42 l/min
- maximum flow rate at 3 bar: 59 l/min
- min. operating pressure: 1 bar
- max. operating pressure: 10 bar
- Safety stop at 40 °C
- temperature limitation adjustable
- connection type: basic set
- dirt filter included

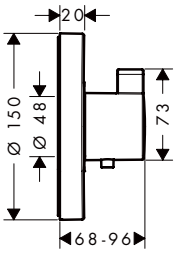

Technologies

Certificates/declarations

Finish	Code no.
Chrome	15741000

Required parts (choose one):			Code no.
Option 1		iBox universal 2 Basic set	01500180
	+	Adapter plate for iBox universal 2	13588000
Option 2		iBox universal Basic set	01800180

Optional parts:		Finish	Code no.
	ShowerSelect S Valve for concealed installation for 3 functions	Chrome	15745000

Measurements within scale drawings are in mm.
Technical specifications and units of measure are subject to change.

ShowerSelect S Thermostat HighFlow for concealed installation for 1 function and additional outlet

Features

- 1 function and 1 additional outlet
- thermostat cartridge
- flow rate of hand shower at 3 bar: 34 l/min
- flow rate upper outlet: 59 l/min
- maximum flow rate at 3 bar: 59 l/min
- min. operating pressure: 1 bar
- max. operating pressure: 10 bar
- Safety stop at 40 °C
- temperature limitation adjustable
- connection type: basic set
- thermostat is delivered with button hand shower

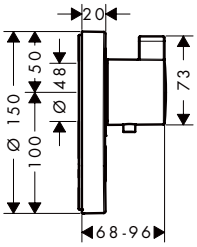

Technologies

Finish	Code no.
Chrome	15742000

Required parts (choose one):			Code no.
Option 1		iBox universal 2 Basic set	01500180
+		Adapter plate for iBox universal 2	13588000
Option 2		iBox universal Basic set	01800180

Optional parts:		Finish	Code no.
	ShowerSelect S Valve for concealed installation for 3 functions	Chrome	15745000

ShowerSelect S Valve for concealed installation for 3 functions

Features

- 3 functions
- use of outlets: simultaneous use of several outlets
- Start/stop valve to operate the functions
- mounting type: wall-mounted
- flow rate upper outlet: 26 l/min
- Flow rate left and right: 29 l/min
- maximum flow rate at 3 bar: 30 l/min
- min. operating pressure: 1 bar
- max. operating pressure: 10 bar
- Button: Valve is delivered with buttons Rain large, Whirl, Waterfall

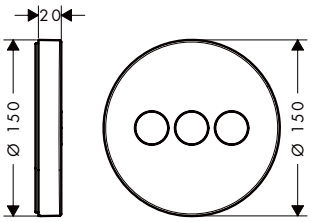

Certificates/declarations

EPD

Finish	Code no.
Chrome	15745000

For more information about this product, please see the next page.

ShowerSelect S Valve for concealed installation for 3 functions

Required parts (choose one):			Code no.
Option 1		iBox universal 2 Basic set	01500180
	+	Adapter plate for iBox universal 2	13588000
Option 2		iBox universal Basic set	01800180

Optional parts:		Finish	Code no.
	ShowerSelect S Thermostat HighFlow for concealed installation	Chrome	15741000
	ShowerSelect S Thermostat HighFlow for concealed installation for 1 function and additional outlet	Chrome	15742000

ShowerSelect S Mixers for concealed installation

Features of all variants

- Start/stop valve to operate the functions
- temperature limitation adjustable
- min. operating pressure: 1 bar
- max. operating pressure: 10 bar
- mixer is delivered with button On/Off
- connection type: basic set

1 function

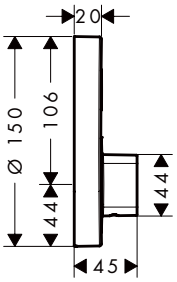

2 functions

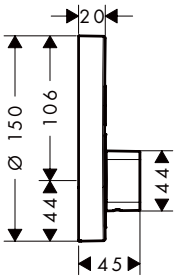

Sustainability

Technologies

Certificates/declarations

Overview variants

Number of functions	Max. flow rate at 3 bar (l/min)	Finish	Code no.
1 function	21	Chrome	15747000
2 functions	22	Chrome	15748000

Required parts (choose one):			Code no.
Option 1		iBox universal 2 Basic set	01500180
	+	Adapter plate for iBox universal 2	13588000
Option 2		iBox universal Basic set	01800180

Measurements within scale drawings are in mm.
Technical specifications and units of measure are subject to change.

Symbol ON/OFF

Finish	Code no.
Black	93579610
Matt Black	93579670
Matt White	93579700
Satin Chrome	93579880

Symbol hand shower

Finish	Code no.
Black	93573610
Matt Black	93573670
Matt White	93573700
Satin Chrome	93573880

Symbol overhead shower Rain large

Finish	Code no.
Black	93571610
Matt Black	93571670
Matt White	93571700
Satin Chrome	93571880

Symbol Rain Flow

Finish	Code no.
Black	93574610
Matt Black	93574670
Matt White	93574700
Satin Chrome	93574880

Symbol Whirl

Finish	Code no.
Black	93575610
Matt Black	93575670
Matt White	93575700
Satin Chrome	93575880

Symbol Mono

Finish	Code no.
Black	93576610
Matt Black	93576670
Matt White	93576700
Satin Chrome	93576880

Symbol tub

Finish	Code no.
Black	93577610
Matt Black	93577670
Matt White	93577700
Satin Chrome	93577880

Symbol Oldalzuhany

Finish	Code no.
Black	93578610
Matt Black	93578670
Matt White	93578700
Satin Chrome	93578880

Measurements within scale drawings are in mm.
Technical specifications and units of measure are subject to change.

Ecostat S Thermostats for concealed installation

Features of all variants

- min. operating pressure: 1 bar
- max. operating pressure: 10 bar

1 function

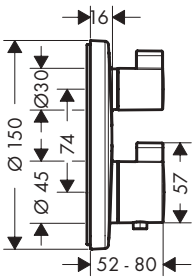

2 functions

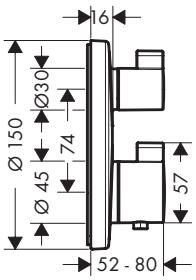

Sustainability

Water Flow Control

Technologies

Thermostat, Safety Stop

Certificates/declarations

EPD

Overview variants

Number of functions	Max. flow rate at 3 bar (l/min)	Finish	Code no.
1 function	26.5	Chrome	15757000
2 functions	29	Chrome	15758000
		Brushed Bronze	15758140
		Brushed Black Chrome	15758340
		Matt Black	15758670
		Matt White	15758700
		Polished Gold Optic	15758990

Required parts (choose one):			Code no.
Option 1		iBox universal 2 Basic set	01500180
+		Adapter plate for iBox universal 2	13588000
Option 2		iBox universal Basic set	01800180

Ecostat S Thermostat HighFlow for concealed installation

Features

- 1 function
- thermostat cartridge
- flow rate upper outlet: 42 l/min
- flow rate lower outlet: 42 l/min
- maximum flow rate at 3 bar: 59 l/min
- min. operating pressure: 1 bar
- max. operating pressure: 10 bar
- Safety stop at 40 °C
- temperature limitation adjustable
- connection type: basic set

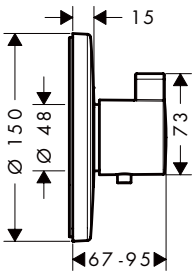

Technologies

Certificates/declarations

Finish	Code no.
Chrome	15756000

Required parts (choose one):			Code no.
Option 1		iBox universal 2 Basic set	01500180
	+	Adapter plate for iBox universal 2	13588000
Option 2		iBox universal Basic set	01800180

Ecostat S Thermostat for concealed installation

Features

- 1 function
- thermostat cartridge
- maximum flow rate at 3 bar: 37 l/min
- min. operating pressure: 1 bar
- max. operating pressure: 10 bar
- Safety stop at 40 °C
- temperature limitation adjustable
- connection type: basic set

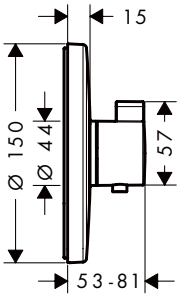

Technologies

Certificates/declarations

Finish	Code no.
Chrome	15755000

Required parts (choose one):			Code no.
Option 1		iBox universal 2 Basic set	01500180
	+	Adapter plate for iBox universal 2	13588000
Option 2		iBox universal Basic set	01800180

Measurements within scale drawings are in mm.
Technical specifications and units of measure are subject to change.

Shut-off/ diverter valve S Trio/ Quattro for concealed installation

Features

- 3 functions

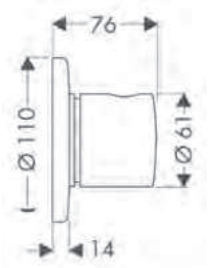

Finish	Code no.
Chrome	15932000

Required parts (choose one):	Code no.
Basic set for Trio shut-off/ diverter valve for concealed installation	15981180
Basic set for Quattro four-way diverter valve for concealed installation	15930180

Shut-off valve S for concealed installation

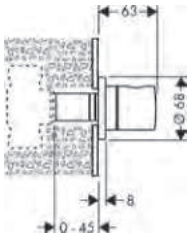

Finish	Code no.
Chrome	15972000

Required parts (choose one):	Code no.
Basic set 40 l/min for shut-off valve for concealed installation ceramic	15974180
Basic set 52 l/min for shut-off valve for concealed installation spindle	15973180
Basic set 130 l/min for shut-off valve for concealed installation spindle	15970180

Optional parts:	Code no.
Extension set 2.5 cm	96370000

Metris Shut-off valve E for concealed installation

Features

- connection type: DN15/DN20
- noise class: II

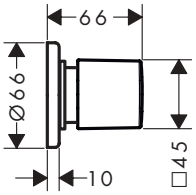

Certificates/declarations

Finish	Code no.
Chrome	31677000
Brushed Bronze	31677140
Brushed Black Chrome	31677340
Matt Black	31677670
Matt White	31677700
Polished Gold Optic	31677990

Required parts (choose one):	Code no.
Basic set 40 l/min for shut-off valve for concealed installation ceramic	15974180
Basic set 52 l/min for shut-off valve for concealed installation spindle	15973180
Basic set 130 l/min for shut-off valve for concealed installation spindle	15970180

Optional parts:	Code no.
Extension set 2.5 cm	96370000

Logis Shut-off valve for concealed installation

Features

- connection type: DN15/DN20
- noise class: II

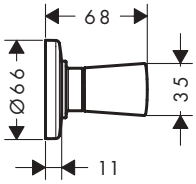

Finish	Code no.
Chrome	71970000

Required parts (choose one):	Code no.
Basic set 40 l/min for shut-off valve for concealed installation ceramic	15974180
Basic set 52 l/min for shut-off valve for concealed installation spindle	15973180
Basic set 130 l/min for shut-off valve for concealed installation spindle	15970180

Optional parts:	Code no.
Extension set 2.5 cm	96370000

Measurements within scale drawings are in mm.
Technical specifications and units of measure are subject to change.

Ecostat Square Thermostats for concealed installation

Features of all variants

- min. operating pressure: 1 bar
- max. operating pressure: 10 bar
- Safety stop at 40 °C
- temperature limitation adjustable
- connection type: basic set

1 function

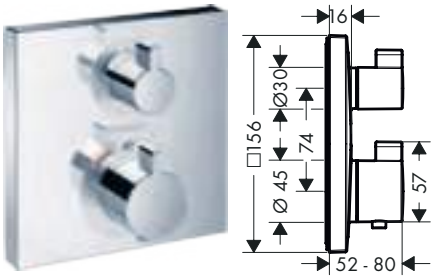

2 functions

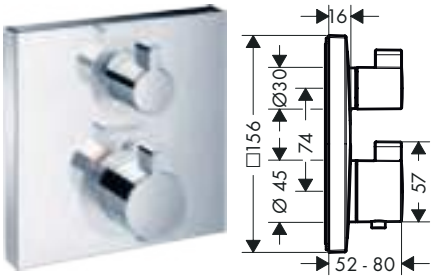

Sustainability

Water Flow Control

Technologies

Thermostat °C | Safety Stop 40 °C

Certificates/declarations

EPD

Overview variants

Number of functions	Max. flow rate at 3 bar (l/min)	Finish	Code no.
1 function	26.5	Chrome	15712000
2 functions	29	Chrome	15714000
		Brushed Bronze	15714140
		Brushed Black Chrome	15714340
		Matt Black	15714670
		Matt White	15714700
		Polished Gold Optic	15714990

Required parts (choose one):			Code no.
Option 1		iBox universal 2 Basic set	01500180
+		Adapter plate for iBox universal 2	13588000
Option 2		iBox universal Basic set	01800180

Measurements within scale drawings are in mm.
Technical specifications and units of measure are subject to change.

Ecostat E Shower thermostats for concealed installation

Features of all variants

- min. operating pressure: 1 bar
- max. operating pressure: 10 bar
- Safety stop at 40 °C
- temperature limitation adjustable
- connection type: basic set

1 function

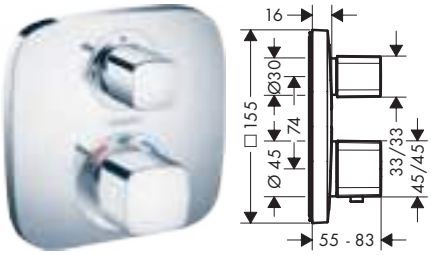

2 functions

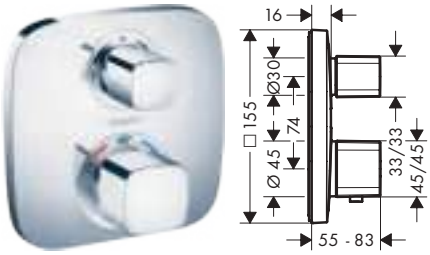

Sustainability

Water Flow Control

Technologies

Thermostat, Safety Stop

Certificates/declarations

EPD

Overview variants

Number of functions	Max. flow rate at 3 bar (l/min)	Finish	Code no.
1 function	26.5	Chrome	15707000
2 functions	29	Chrome	15708000

Required parts (choose one):			Code no.
Option 1		iBox universal 2 Basic set	01500180
	+	Adapter plate for iBox universal 2	13588000
Option 2		iBox universal Basic set	01800180

Ecostat E Thermostat for concealed installation

Features

- 1 function
- thermostat cartridge
- maximum flow rate at 3 bar: 37 l/min
- min. operating pressure: 1 bar
- max. operating pressure: 10 bar
- Safety stop at 40 °C
- temperature limitation adjustable
- connection type: basic set

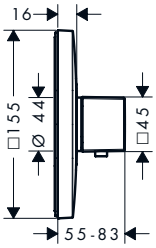

Technologies

Thermostat, Safety Stop

Certificates/declarations

EPD

Finish	Code no.
Chrome	15705000

Required parts (choose one):			Code no.
Option 1		iBox universal 2 Basic set	01500180
	+	Adapter plate for iBox universal 2	13588000
Option 2		iBox universal Basic set	01800180

Measurements within scale drawings are in mm.
Technical specifications and units of measure are subject to change.

Ecostat E Thermostat HighFlow for concealed installation

Features

- 1 function
- thermostat cartridge
- flow rate upper outlet: 42 l/min
- flow rate lower outlet: 42 l/min
- maximum flow rate at 3 bar: 59 l/min
- min. operating pressure: 1 bar
- max. operating pressure: 10 bar
- Safety stop at 40 °C
- temperature limitation adjustable
- connection type: basic set

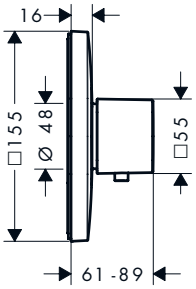

Technologies

Finish	Code no.
Chrome	15706000

Required parts (choose one):			Code no.
Option 1		iBox universal 2 Basic set	01500180
+		Adapter plate for iBox universal 2	13588000
Option 2		iBox universal Basic set	01800180

DuoTurn S Mixer for concealed installation for 1 function

Features

- 1 function
- volume control for 1 function
- maximum flow rate at 3 bar: 29,5 l/min
- ceramic cartridge for temperature control, 1/2" ceramic shut-off valve
- flat escutcheon for more space in the shower
- easy installation due to pre-assembled function block
- handles always at the same height regardless of the installation depth of the basic set
- escutcheon can be aligned by +/- 3°
- material escutcheon: plastic
- material handles: metal
- min. operating pressure: 1 bar
- max. operating pressure: 10 bar
- mixer is delivered with button hand shower
- connection type: basic set iBox universal 2 (# 01500180)

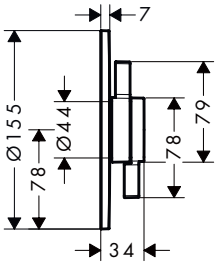

Sustainability

Water Flow Control

Finish	Code no.
Chrome	75618000
Brushed Bronze	75618140
Matt Black	75618670
Matt White	75618700

Required parts:	Code no.
iBox universal 2 Basic set	01500180

DuoTurn S Mixer for concealed installation for 2 functions

Features

- 2 functions
- volume control and diverter for 2 functions
- maximum flow rate at 3 bar: 29,5 l/min
- flow rate upper outlet: 29,5 l/min
- flow rate lower outlet: 29,5 l/min
- ceramic cartridge for temperature control, shut-off/ diverter valve
- easy installation due to pre-assembled function block
- handles always at the same height regardless of the installation depth of the basic set
- escutcheon can be aligned by +/- 3°
- material escutcheon: plastic
- material handles: metal
- min. operating pressure: 1 bar
- max. operating pressure: 10 bar
- mixer is delivered with buttons Rain small, Rain large, hand sower, Waterfall, bath tub
- connection type: basic set iBox universal 2 (# 01500180)

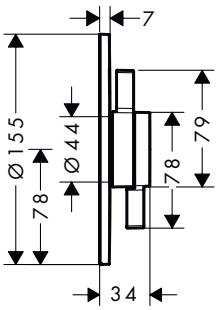

Sustainability

Water Flow Control

Finish	Code no.
Chrome	75418000
Brushed Bronze	75418140
Matt Black	75418670
Matt White	75418700

Measurements within scale drawings are in mm.
Technical specifications and units of measure are subject to change.

DuoTurn S Mixer for concealed installation for 2 functions

Required parts:	Code no.
iBox universal 2 Basic set	01500180

Optional parts:	Code no.
Security combination according to EN 1717	13077000

DuoTurn E Mixer for concealed installation for 1 function

Features

- 1 function
- volume control for 1 function
- maximum flow rate at 3 bar: 29,5 l/min
- ceramic cartridge for temperature control, 1/2" ceramic shut-off valve
- flat escutcheon for more space in the shower
- easy installation due to pre-assembled function block
- handles always at the same height regardless of the installation depth of the basic set
- escutcheon can be aligned by +/- 3°
- material escutcheon: plastic
- material handles: metal
- min. operating pressure: 1 bar
- max. operating pressure: 10 bar
- mixer is delivered with button hand shower
- connection type: basic set iBox universal 2 (# 01500180)

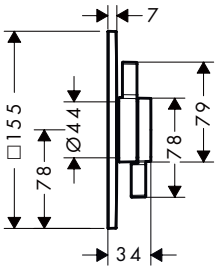

Sustainability

Water Flow Control

Finish	Code no.
Chrome	75617000
Brushed Bronze	75617140
Matt Black	75617670
Matt White	75617700

Required parts:	Code no.
iBox universal 2 Basic set	01500180

DuoTurn E Mixer for concealed installation for 2 functions

Features

- 2 functions
- volume control and diverter for 2 functions
- maximum flow rate at 3 bar: 29,5 l/min
- flow rate upper outlet: 29,5 l/min
- flow rate lower outlet: 29,5 l/min
- ceramic cartridge for temperature control, shut-off/ diverter valve
- easy installation due to pre-assembled function block
- handles always at the same height regardless of the installation depth of the basic set
- escutcheon can be aligned by +/- 3°
- material escutcheon: plastic
- material handles: metal
- min. operating pressure: 1 bar
- max. operating pressure: 10 bar
- mixer is delivered with buttons Rain small, Rain large, hand sower, Waterfall, bath tub
- connection type: basic set iBox universal 2 (# 01500180)

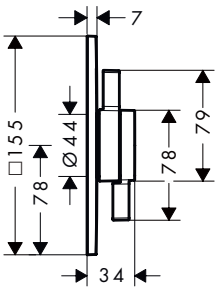

Sustainability

Water Flow Control

Finish	Code no.
Chrome	75417000
Brushed Bronze	75417140
Matt Black	75417670
Matt White	75417700

Required parts:	Code no.
iBox universal 2 Basic set	01500180

Optional parts:	Code no.
Security combination according to EN 1717	13077000

Measurements within scale drawings are in mm.
Technical specifications and units of measure are subject to change.

DuoTurn Q Mixer for concealed installation for 1 function

Features

- 1 function
- volume control for 1 function
- maximum flow rate at 3 bar: 29,5 l/min
- ceramic cartridge for temperature control, 1/2" ceramic shut-off valve
- flat escutcheon for more space in the shower
- easy installation due to pre-assembled function block
- handles always at the same height regardless of the installation depth of the basic set
- escutcheon can be aligned by +/- 3°
- material escutcheon: plastic
- material handles: metal
- min. operating pressure: 1 bar
- max. operating pressure: 10 bar
- mixer is delivered with button hand shower
- connection type: basic set iBox universal 2 (# 01500180)

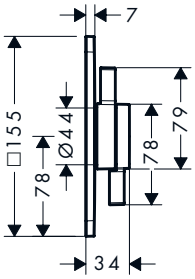

Sustainability

Water Flow Control

Finish	Code no.
Chrome	75614000
Brushed Bronze	75614140
Matt Black	75614670
Matt White	75614700

Required parts:	Code no.
iBox universal 2 Basic set	01500180

DuoTurn Q Mixer for concealed installation for 2 functions

Features

- 2 functions
- volume control and diverter for 2 functions
- maximum flow rate at 3 bar: 29,5 l/min
- flow rate upper outlet: 29,5 l/min
- flow rate lower outlet: 29,5 l/min
- ceramic cartridge for temperature control, shut-off/ diverter valve
- flat escutcheon for more space in the shower
- easy installation due to pre-assembled function block
- handles always at the same height regardless of the installation depth of the basic set
- escutcheon can be aligned by +/- 3°
- material escutcheon: plastic
- material handles: metal
- min. operating pressure: 1 bar
- max. operating pressure: 10 bar
- mixer is delivered with buttons Rain small, Rain large, hand sower, Waterfall, bath tub
- connection type: basic set iBox universal 2 (# 01500180)

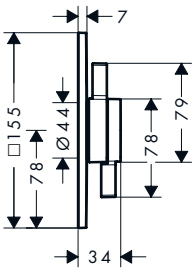

Sustainability

Water Flow Control

Finish	Code no.
Chrome	75414000
Brushed Bronze	75414140
Matt Black	75414670
Matt White	75414700

For more information about this product, please see the next page.

Measurements within scale drawings are in mm.
Technical specifications and units of measure are subject to change.

DuoTurn Q Mixer for concealed installation for 2 functions

Required parts:		Code no.
	iBox universal 2 Basic set	01500180

Optional parts:		Code no.
	Security combination according to EN 1717	13077000

Security combination according to EN 1717

Features

- can be retrofitted for all mixers for concealed installation for 2 functions for iBox universal 2
- protected against backflow, according to DIN EN 1717

	Code no.
	13077000

Measurements within scale drawings are in mm.
Technical specifications and units of measure are subject to change.

Basic sets

Technologies

Easy Installation

Quick and safe installation - several features ensure easy installation. With well thought-out designs and installation aids, we make our specialist partners' working lives easier.

Installation

Water damage protection

Avoid water damage with a pre-assembled sealing membrane. It is 100% waterproof. This prevents any shower water from getting through the wall or floor for a reliable and safe showering experience.

Finish

Brushed Black Chrome

-340

Brushed Bronze

-140

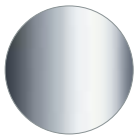

Chrome

-000

Matt Black

-670

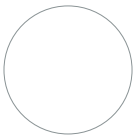

Matt White

-700

Polished Gold Optic

-990

iBox universal 2 Basic set

Features

- suitable for all new shower, bath tub and thermostat finish sets for concealed installation (ShowerSelect Comfort, DuoTurn)
- in conjunction with adapter plate (# 13588000) compatible with other concealed shower, bath tub and thermostat finish sets
- material: dezincification brass, EPP foam, heat and sound insulating
- connection thread: Rp ½
- connection dimension: DN15
- rotationally-symmetric installation
- sound-decoupled installation
- flexible mounting ring for different mounting situations
- mounting ring adjustable in 5 mm steps
- mounting ring suitable for front and rear installation
- no shortening necessary thanks to sliding sleeve
- support aid for the spirit level
- integrated spirit level for correct horizontal and vertical alignment
- sealing foil permanently fixed
- power supply: M16 flexible conduit
- minimum mounting depth: 80 mm
- maximum mounting depth: 108 mm

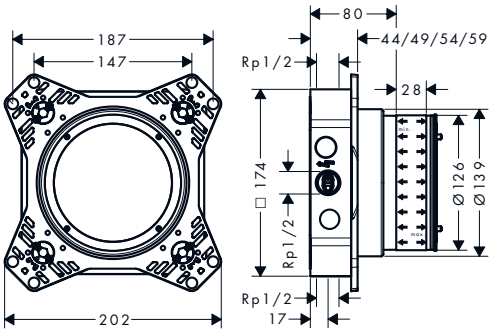

Technologies

Installation

Code no.
01500180

Optional parts:		Code no.
	Adapter plate for iBox universal 2	13588000
	Extension iBox universal 2 basic set 25 mm	13637000
	Extension finish sets 25 - 75 mm	13632000
	Extension finish sets 25 mm	13638000
	Fastening rail set for iBox universal	96615000
	Assembly aid for iBox universal + iBox universal 2	93500000

Adapter plate for iBox universal 2

Features

- is required when installing iBox universal (# 01800180, # 01700180) compatible overhead showers, shower, bath tub and thermostat finish sets for concealed installation in conjunction with the iBox universal 2 (# 01500180, # 01400180)

Code no.
13588000

Measurements within scale drawings are in mm.
Technical specifications and units of measure are subject to change.

Extension iBox universal 2 basic set 25 mm

Features

- extension for basic set
- is required if the basic set is installed too deep
- extension length: 25 mm

Code no.
13637000

Extension finish sets 25 - 75 mm

Features

- extension for finish sets ShowerSelect Comfort, DuoTurn and AXOR ShowerSelect ID
- is required if the basic set is installed too deep
- extension length: 25 - 75 mm

Code no.
13632000

Extension finish sets 25 mm

Features

- extension for finish sets ShowerSelect Comfort, DuoTurn and AXOR ShowerSelect ID
- is required if the basic set is installed too deep
- extension length: 25 mm

Code no.
13638000

Extension element 5 mm

Features

- for installation between tiles and finish set
- is required if the basic set is installed too flat
- for larger tile coverage
- suitable for ShowerSelect Comfort and DuoTurn (for DuoTurn please order the adapter from the optional parts)
- dimension: 170 x 170 mm
- extension length: 5 mm

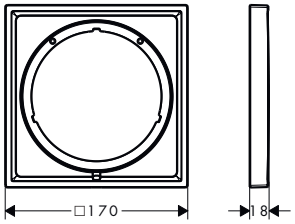

Finish	Code no.
Chrome	13612000
Brushed Bronze	13612140
Brushed Black Chrome	13612340
Matt Black	13612670
Matt White	13612700

Optional parts:	Code no.
DuoTurn E/Q Adapter for extension element	13628000

Extension element 22 mm

Features

- for installation between tiles and finish set
- is required if the basic set is installed too flat
- for larger tile coverage
- suitable for ShowerSelect Comfort and DuoTurn (for DuoTurn please order the adapter from the optional parts)
- dimension: 170 x 170 mm
- extension length: 22 mm

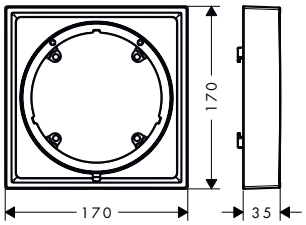

Finish	Code no.
Chrome	13617000
Brushed Bronze	13617140
Brushed Black Chrome	13617340
Matt Black	13617670
Matt White	13617700

Optional parts:	Code no.
DuoTurn E/Q Adapter for extension element	13628000

Extension element 5 mm

Features

- for installation between tiles and finish set
- is required if the basic set is installed too flat
- for larger tile coverage
- suitable for ShowerSelect Comfort and DuoTurn (for DuoTurn please order the adapter from the optional parts)
- dimension: 170 x 170 mm
- extension length: 5 mm

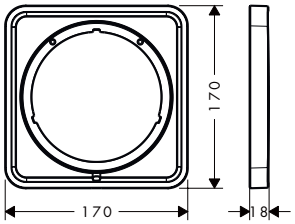

Finish	Code no.
Chrome	13613000
Brushed Bronze	13613140
Brushed Black Chrome	13613340
Matt Black	13613670
Matt White	13613700

Optional parts:	Code no.
DuoTurn E/Q Adapter for extension element	13628000

Measurements within scale drawings are in mm.
Technical specifications and units of measure are subject to change.

Extension element 22 mm

Features

- for installation between tiles and finish set
- is required if the basic set is installed too flat
- for larger tile coverage
- suitable for ShowerSelect Comfort and DuoTurn (for DuoTurn please order the adapter from the optional parts)
- dimension: 170 x 170 mm
- extension length: 22 mm

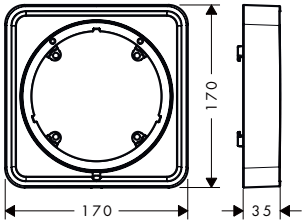

Finish	Code no.
Chrome	13618000
Brushed Bronze	13618140
Brushed Black Chrome	13618340
Matt Black	13618670
Matt White	13618700

Optional parts:	Code no.
DuoTurn E/Q Adapter for extension element	13628000

DuoTurn E/Q Adapter for extension element

Features

- is required if the basic set is installed too flat

	Code no.
	13628000

Extension element 5 mm

Features

- for installation between tiles and finish set
- is required if the basic set is installed too flat
- for larger tile coverage
- suitable for ShowerSelect Comfort and DuoTurn (for DuoTurn please order the adapter from the optional parts)
- diameter: 170 mm
- extension length: 5 mm

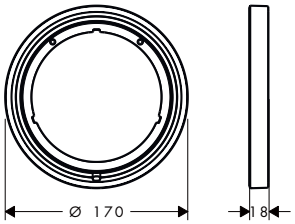

Finish	Code no.
Chrome	13614000
Brushed Bronze	13614140
Brushed Black Chrome	13614340
Matt Black	13614670
Matt White	13614700

Optional parts:	Code no.
DuoTurn S Adapter for extension element	13631000

Extension element 22 mm

Features

- for installation between tiles and finish set
- is required if the basic set is installed too flat
- for larger tile coverage
- suitable for ShowerSelect Comfort and DuoTurn (for DuoTurn please order the adapter from the optional parts)
- diameter: 170 mm
- extension length: 22 mm

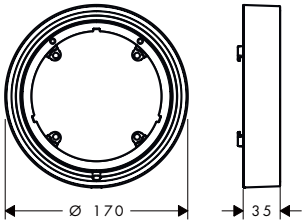

Finish	Code no.
Chrome	13624000
Brushed Bronze	13624140
Brushed Black Chrome	13624340
Matt Black	13624670
Matt White	13624700

Optional parts:	Code no.
DuoTurn S Adapter for extension element	13631000

DuoTurn S Adapter for extension element

Features

- is required if the basic set is installed too flat

Code no.
13631000

Measurements within scale drawings are in mm.
Technical specifications and units of measure are subject to change.

iBox universal Basic set

Features

- suitable for all shower, bath tub and thermostat finish sets for concealed installation
- connection thread: Rp ¾
- connection dimension: DN20
- rotationally-symmetric installation
- sound-decoupled installation
- minimum mounting depth: 80 mm
- maximum mounting depth: 108 mm

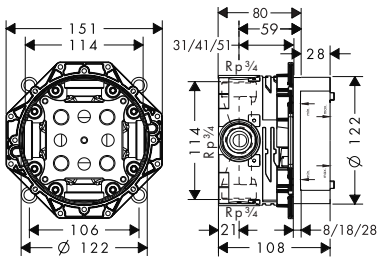

Certificates/declarations

	Code no.
	01800180

Optional parts:		Code no.
	Extension iBox universal basic set 2.5 cm	13595000
	Fastening rail set for iBox universal	96615000
	Assembly aid for iBox universal + iBox universal 2	93500000
	Reduction coupling iBox universal	97759000

iBox universal Basic set with shut-off unit

Features

- suitable for all shower, bath tub and thermostat finish sets for concealed installation
- connection thread: Rp ¾
- connection dimension: DN20
- sound-decoupled installation

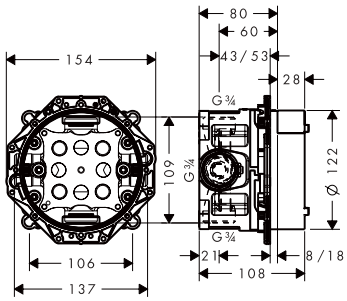

Certificates/declarations

	Code no.
	01850180

Optional parts:		Code no.
	Extension iBox universal basic set 2.5 cm	13595000
	Fastening rail set for iBox universal	96615000
	Assembly aid for iBox universal + iBox universal 2	93500000
	Reduction coupling iBox universal	97759000

Measurements within scale drawings are in mm.
Technical specifications and units of measure are subject to change.

Assembly aid for iBox universal + iBox universal 2

Features

- spirit levels for correct horizontal and vertical alignment of the iBox universal
- with fixations to simply put the assembly aid on the iBox universal
- markings for the tile spacer
- 4 more fixation aids all around, thus against rotation

Code no.
93500000

Extension iBox universal basic set 2.5 cm

Features

- extension for basic set
- extension length: 25 mm

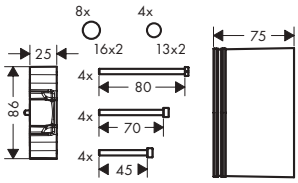

Code no.
13595000

Flushing board iControl

Finish	Code no.
Chrome	15956000

Fastening rail set for iBox universal

Features

- quick installation and alignment of the iBox universal in various installation situations
- for bridging large or wide wall recesses
- individually bendable for pre-wall mounting

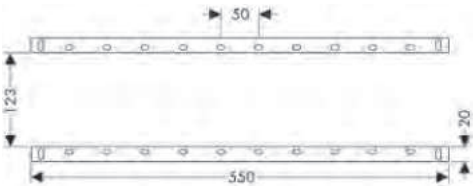

Code no.
96615000

Measurements within scale drawings are in mm.
Technical specifications and units of measure are subject to change.

ShowerSelect Extension element

Features

- for installation between tiles and finish set
- suitable for all shower and bath tub finish sets Ø 150 mm
- diameter: 157 mm
- extension length: 22 mm

Finish	Code no.
Chrome	13593000
Brushed Bronze	13593140
Brushed Black Chrome	13593340
Matt Black	13593670
Matt White	13593700
Polished Gold Optic	13593990

ShowerSelect Glass Extension element

Features

- for installation between tiles and finish set
- diameter: 157 mm
- extension length: 22 mm

Finish	Code no.
Chrome	13604000

Extension element 15 cm

Features

- for installation between tiles and finish set
- suitable for all shower and bath tub finish sets Ø 150 mm
- diameter: 152 mm
- extension length: 22 mm

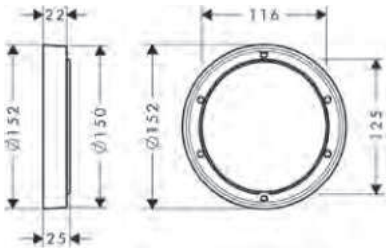

Finish	Code no.
Chrome	13597000
Brushed Bronze	13597140
Brushed Black Chrome	13597340
Matt Black	13597670
Matt White	13597700

Measurements within scale drawings are in mm.
Technical specifications and units of measure are subject to change.

Extension element ShowerSelect FixFit Porter

Features

- for installation between tiles and finish set
- extension length: 22 mm

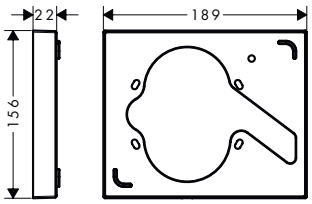

Finish	Code no.
Chrome	13601000

Optional parts:	Finish	Code no.
ShowerSelect Thermostat for concealed installation for 2 functions with hose connection and shower holder	Chrome	15765000

Measurements within scale drawings are in mm.
Technical specifications and units of measure are subject to change.

sBox Finish sets

Features of all variants

- consists of: hose box, shower hose, escutcheon
- suitable for rim or tile mounted installation
- 1 function
- sBox for quiet, smooth and protected hose guidance
- connection dimension: DN15
- no additional maintenance opening required
- bath rim width at least 80 mm
- clamping range: 0 - 30 mm
- maximum pull-out length of hand shower 1,45 m
- removable for service at any time
- protected against backflow, according to DIN EN 1717
- maximum flow rate at 3 bar: 9,5 l/min

square

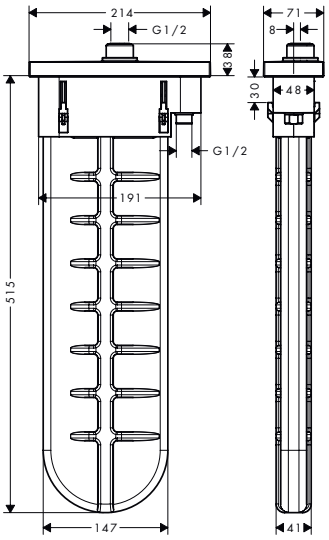

oval

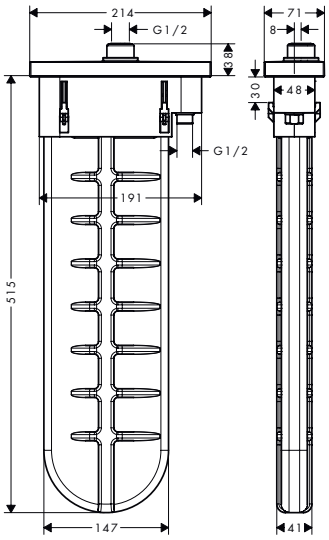

Certificates/declarations

EPD

Overview variants

	Shape	Finish	Code no.
	square	Chrome	28010000
		Brushed Bronze	28010140
		Brushed Black Chrome	28010340
		Matt Black	28010670
		Matt White	28010700
		Polished Gold Optic	28010990
	oval	Chrome	28020000
		Brushed Bronze	28020140
		Brushed Black Chrome	28020340
		Matt Black	28020670
		Matt White	28020700
		Polished Gold Optic	28020990

Required parts:		Code no.
	sBox Rim and tile mounted bath basic set	13560180

Optional parts:		Finish	Code no.
	sBox Installation plate for tile mounted installation		28016000
	sBox Mounting angle set for installation plate for tile mounted installation		28021000
	Rim mounted adapter 25°	Chrome	28071000

Measurements within scale drawings are in mm.
Technical specifications and units of measure are subject to change.

Basic set for 3-hole rim mounted single lever bath mixer

Features

- sBox for quiet, smooth and protected hose guidance
- drilling diameter: 35 mm, 50 mm
- clamping range: 0 - 30 mm
- maximum pull-out length of hand shower: 1,45 m
- suitable for installation on bath rim
- connection thread: G ½
- connection hose length: 600 mm
- connection dimension: DN15
- bath rim width at least 80 mm
- drilling diameter on bath tub: two drilled holes Ø 50/51 mm and connection by sawing out required (consider template)

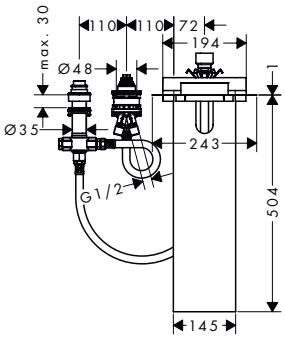

Code no.
13481180

sBox Rim and tile mounted bath basic set

Features

- suitable for rim or tile mounted installation
- 1 function
- connection thread: G ½
- connection dimension: DN15
- connection hose length: 600 mm
- bath rim width at least 80 mm
- drilling diameter on bath tub: two drilled holes Ø 50/51 mm and connection by sawing out required (consider template)
- clamping range: 0 - 30 mm

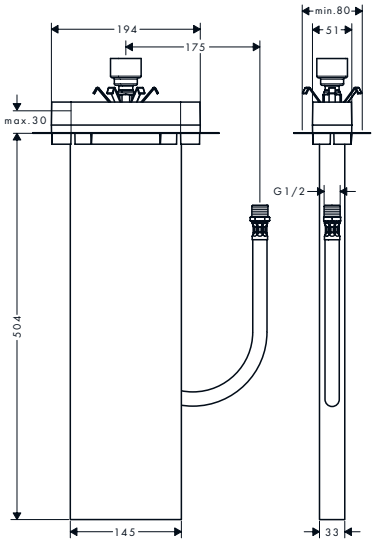

Certificates/declarations

Code no.
13560180

Optional parts:	Code no.
sBox Installation plate for tile mounted installation	28016000
sBox Mounting angle set for installation plate for tile mounted installation	28021000

Measurements within scale drawings are in mm.
Technical specifications and units of measure are subject to change.

sBox Installation plate for tile mounted installation

Features

- dimension: 350 x 120 mm

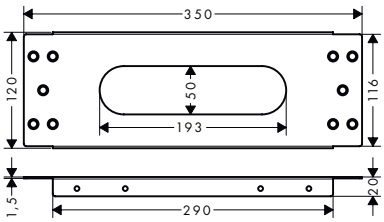

Code no.
28016000

sBox Mounting angle set for installation plate for tile mounted installation

Features

- maximum mounting height: 750 mm
- minimum mounting height: 400 mm
- packaging unit: 2 pieces

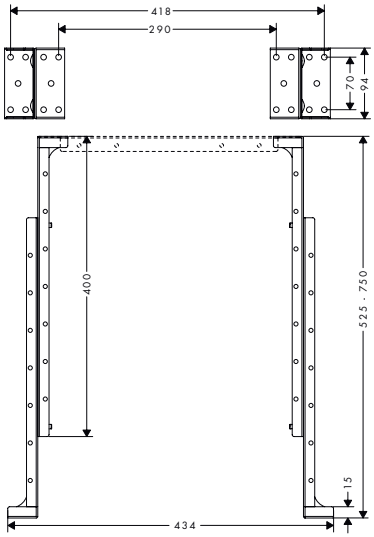

Code no.
28021000

Basic set for single lever basin mixer for concealed installation wall-mounted

Features

- variable positioning of the mixer system, can be left or right of the spout
- easy orientation due to support surfaces for the spirit level
- with building protection cover against contamination during assembly
- with dimension indication for exact determination of the installation depth
- with pre-mounted fastening lugs for mounting in drywall and solidwall
- sound-decoupled installation
- connection dimension: DN15
- minimum mounting depth: 44 mm
- maximum mounting depth: 72 mm

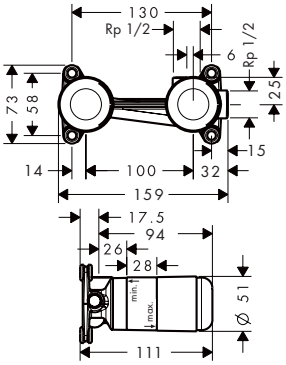

Certificates/declarations

	Code no.
	13622180

Optional parts:	Code no.
Extension set 2.5 cm	31971000

Basic set for mixers floor-standing

Features

- for mounting on unfinished floor
- suitable for single lever bath mixer, single lever basin mixer and bath spout floor-standing
- connection dimension: DN15
- minimum mounting depth: 53 mm
- maximum mounting depth: 133 mm

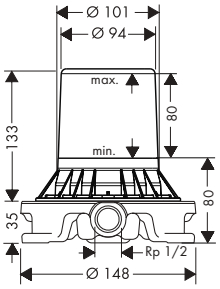

Certificates/declarations

	Code no.
	10452180

Optional parts:	Code no.
Sealing foil for basic set bath mixer floor-standing	96441000

Measurements within scale drawings are in mm.
Technical specifications and units of measure are subject to change.

Basic set for 2-hole rim mounted bath mixer

Features

- suitable for remote spout
- connection thread: G ½
- connection dimension: DN15
- ceramic cartridge
- flow rate upper outlet: 18,9 l/min
- flow rate lower outlet: 18,9 l/min

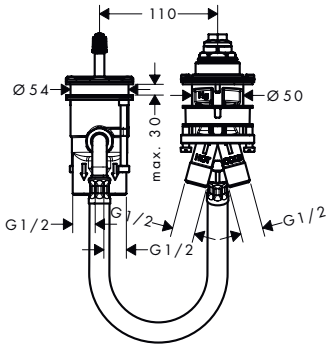

Code no.
13159180

Optional parts:		Finish	Code no.
	Connection tube set for 2-hole rim mounted thermostatic bath mixer		96387000
	Flexible connection tube 80 cm		58192000
	Rim mounted bath set with hand shower	Chrome	19418000

Basic set for 3-hole rim mounted bath mixer

Features

- maintenance opening required
- connection thread: G ½
- connection dimension: DN15
- ceramic valves hot/cold 90°

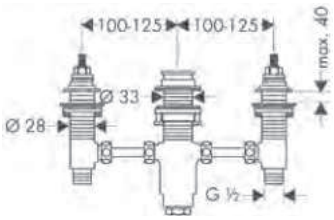

Code no.
13233180

Basic set for 3-hole rim mounted single lever bath mixer

Features

- consists of: basic set, shower holder, shower hose
- maximum pull-out length of hand shower: 1.60 m
- maintenance opening required
- connection dimension: G ½

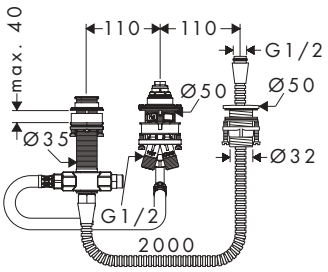

Certificates/declarations

Code no.
13439180

Measurements within scale drawings are in mm.
Technical specifications and units of measure are subject to change.

Basic set for 3-hole rim mounted single lever bath mixer

Features

- consists of: basic set, shower hose, Secubox
- maximum pull-out length of hand shower: 1.10 m
- connection thread: G ½
- connection dimension: DN15

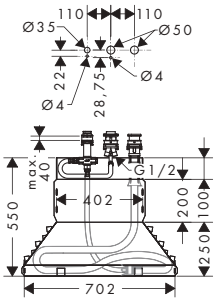

Certificates/declarations

Code no.
13437180

Optional parts:	Code no.
Secuflex insert extension	98806000

Basic set for 4-hole rim mounted bath mixer

Features

- consists of: basic set, shower holder, shower hose
- maximum pull-out length of hand shower: 1.60 m
- maintenance opening required
- suitable for 4-hole rim mounted bath mixer
- connection thread: G ½
- connection dimension: DN15
- ceramic valves hot/cold 90°

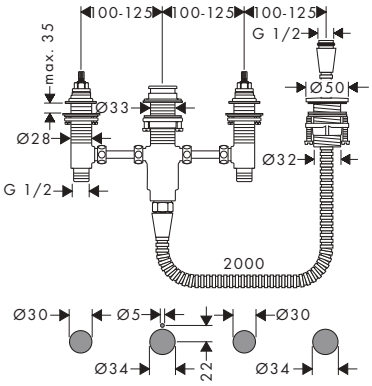

Certificates/declarations

Code no.
13244180

Basic set for 4-hole rim mounted bath mixer

Features

- connection thread: G ½
- connection dimension: DN15
- bath rim width at least 80 mm

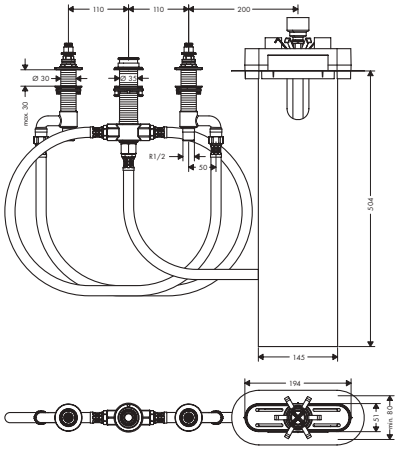

Code no.
13440180

Measurements within scale drawings are in mm.
Technical specifications and units of measure are subject to change.

Basic set for 4-hole rim mounted bath mixer

Features

- consists of: basic set, shower hose, Secubox
- maximum pull-out length of hand shower: 1.10 m
- connection dimension: DN15

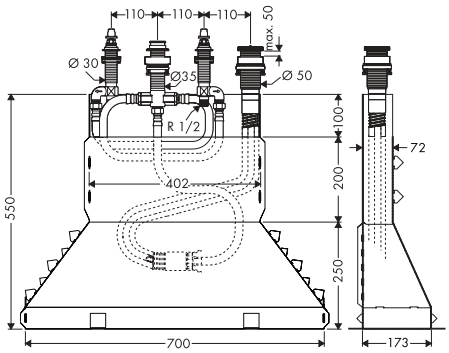

Certificates/declarations

	Code no.
	13444180

Optional parts:	Code no.
Secuflex insert extension	98806000

Basic set for single lever bath mixer for concealed installation

Features

- connection dimension: DN15
- ceramic cartridge
- temperature limitation adjustable
- minimum mounting depth: 55 mm
- maximum mounting depth: 83 mm

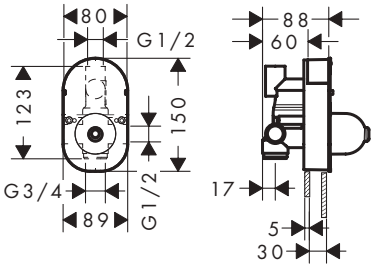

Certificates/declarations

	Code no.
	31741180

Optional parts:	Code no.
Extension for basic set for single lever bath mixer for concealed installation	32498000

Basic set for single lever shower mixer for concealed installation

Features

- connection dimension: DN15
- ceramic cartridge
- temperature limitation adjustable
- minimum mounting depth: 55 mm
- maximum mounting depth: 83 mm

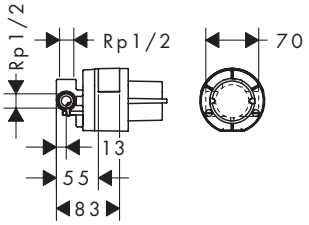

Certificates/declarations

	Code no.
	13620180

Optional parts:		Code no.
	Extension set for basic set for single lever shower mixer for concealed installation	32698000

Basic set for Trio shut-off/ diverter valve for concealed installation

Features

- 2 outlets can be used simultaneously

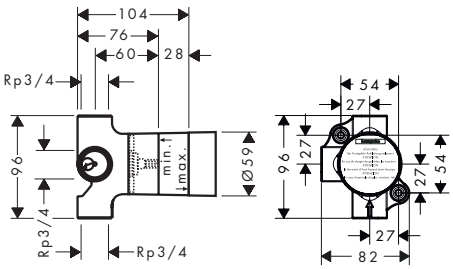

Certificates/declarations

	Code no.
	15981180

Optional parts:		Code no.
	Extension set 2.5 cm	96370000

Measurements within scale drawings are in mm.
Technical specifications and units of measure are subject to change.

Basic set for Quattro four-way diverter valve for concealed installation

Features

- requires volume control
- 3 functions
- simultaneous utilization of 2 functions
- suitable for all Quattro finish sets
- connection dimension: DN20
- maximum flow rate at 3 bar: 65 l/min

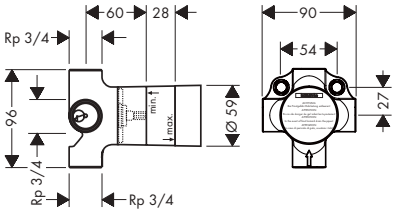

Certificates/declarations

Code no.
15930180

Optional parts:	Code no.
Extension set 2.5 cm	96370000

Extension set 2.5 cm

Features

- extension length: 25 mm

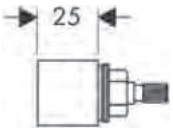

Code no.
96370000

Basic set 52 l/min for shut-off valve for concealed installation spindle

Features

- connection type: DN15
- suitable for all shut-off valves finish sets
- maximum flow rate at 3 bar: 52 l/min
- connection dimension: DN15

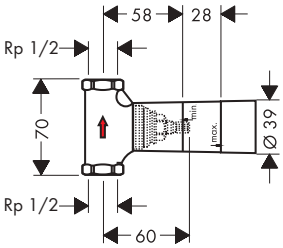

Certificates/declarations

Code no.
15973180

For more information about this product, please see the next page.

Basic set 52 l/min for shut-off valve for concealed installation spindle

Optional parts:	Code no.
Extension set 2.5 cm	96370000

Basic set 40 l/min for shut-off valve for concealed installation ceramic

Features

- connection type: DN15
- suitable for all shut-off valves finish sets
- maximum flow rate at 3 bar: 40 l/min
- connection dimension: DN15

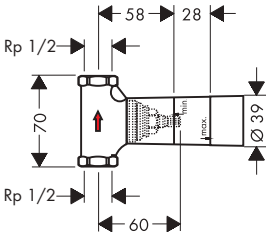

Certificates/declarations

Code no.
15974180

Optional parts:	Code no.
Extension set 2.5 cm	96370000

Basic set 130 l/min for shut-off valve for concealed installation spindle

Features

- suitable for all shut-off valves finish sets
- maximum flow rate at 3 bar: 130 l/min
- connection dimension: DN20
- noise class: II

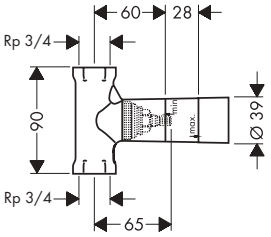

Certificates/declarations

Code no.
15970180

Optional parts:	Code no.
Extension set 2.5 cm	96370000

Measurements within scale drawings are in mm.
Technical specifications and units of measure are subject to change.

RainSelect Base sets for shower thermostats for concealed installation

Features of all variants

- connection thread: Rp ¾
- connection dimension: DN15/DN20
- horizontal installation
- sound-decoupled installation

2 functions

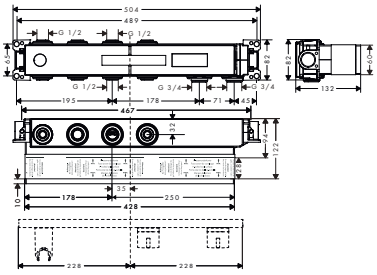

3 functions

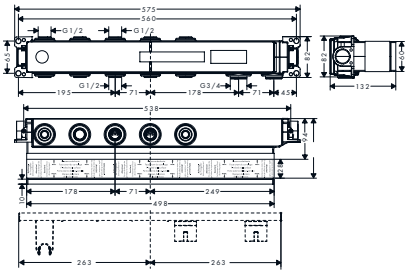

Certificates/declarations

Overview variants

Number of functions	Code no.
2 functions	15310180
3 functions	15311180

RainSelect Base sets for shower thermostats for concealed installation

Features of all variants

- connection thread: Rp ¾
- connection dimension: DN15/DN20
- horizontal installation
- sound-decoupled installation
- minimum mounting depth: 92 mm
- maximum mounting depth: 120 mm

4 functions

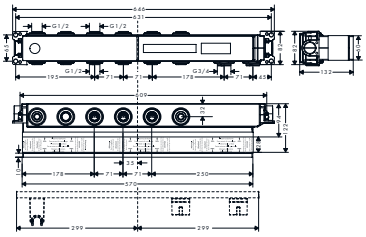

5 functions

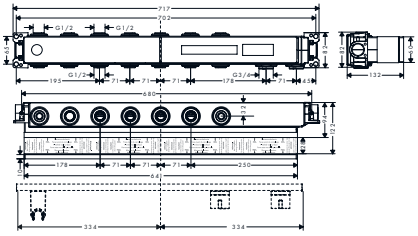

Certificates/declarations

Overview variants

Number of functions	Code no.
4 functions	15312180
5 functions	15313180

Rainmaker Select Basic set for overhead shower with ceiling connector

Features

- includes polystyrene sheathing as a placeholder during installation

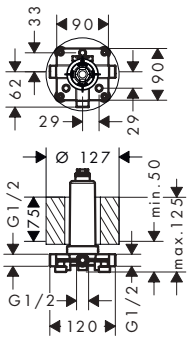

Certificates/declarations

Code no.
24010180

Measurements within scale drawings are in mm.
Technical specifications and units of measure are subject to change.

Raindance Rainmaker Basic set for overhead shower 680/460 3jet

Features

· connection dimension: G ½

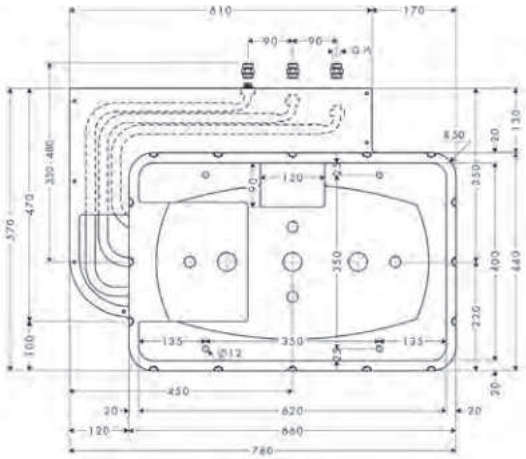

Certificates/declarations

	Code no.
	28414180

Optional parts:		Finish	Code no.
	Raindance Rainmaker Overhead shower 680/460 3jet with lighting	Chrome	28418000
	Raindance Rainmaker Overhead shower 680/460 3jet without lighting	Chrome	28417000

Raindance E Basic set for overhead shower 400/400 1jet

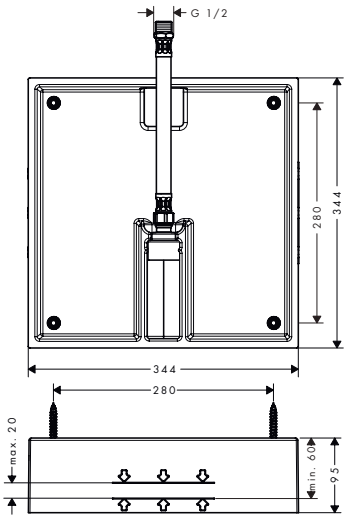

Certificates/declarations

	Code no.
	26254180

Optional parts:		Finish	Code no.
	Raindance E Overhead shower 400/400 1jet ceiling integrated	Chrome	26252000
	Raindance E Overhead shower 400/400 1jet EcoSmart ceiling integrated	Chrome	26253000

Measurements within scale drawings are in mm.
Technical specifications and units of measure are subject to change.

Raindance Basic set for overhead shower 260/260 1jet

Features

- minimum mounting depth: 60 mm
- maximum mounting depth: 80 mm
- connection dimension: G ½

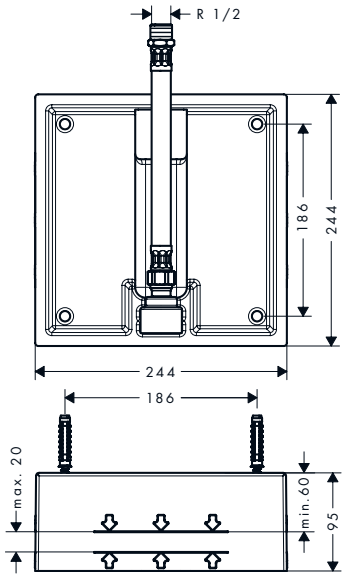

Certificates/declarations

	Code no.
	26471180

Optional parts:		Finish	Code no.
	Raindance Overhead shower 260/260 1jet	Chrome	26472000
	Raindance Overhead shower 260/260 1jet EcoSmart	Chrome	26481000

Basic set for mixed water bidette EU

Features

- wall-mounted
- minimum mounting depth: 45 mm
- maximum mounting depth: 60 mm
- hot and cold water connection necessary

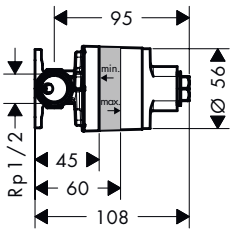

	Code no.
	29239180

Basic set for mixed water bidette

Features

- suitable for: all bidette hand showers for mixed water
- wall-mounted
- minimum mounting depth: 45 mm
- maximum mounting depth: 60 mm
- connection dimension: Rp ½
- hot and cold water connection necessary

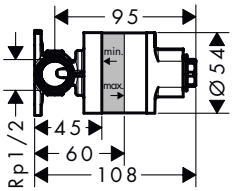

	Code no.
	29235180

Measurements within scale drawings are in mm.
Technical specifications and units of measure are subject to change.

Mixers

Mixers

Metropol 431

Metris 445

Finoris 455

Tecturis 465

Vivenis 489

Talis 499

Focus 525

Rebris 541

Logis 563

Vernis 585

Electronic mixers 615

Overview Basin Mixers

	Metropol				Metris
Finish					
ComfortZone	100 - 260	230	110/160	–	100 - 260
Projection (mm)	127 - 204	165	132/152	165/225	89 - 197
CoolStart	■	–	–	–	■
EcoSmart+	–	–	–	–	–
EcoSmart	■	■	■	■	■
QuickClean	■	–	■	■	■
AirPower	■	■	■	■	■
Remove&Clean	–	–	–	–	–
Pillar tap	■	–	–	–	–
For open water heaters	–	–	–	–	■
Swivel spout	–	■	–	–	–
Wall installation	–	–	–	■	–
Electronic basin mixer	–	–	–	–	–
from page	432	434	435	435	446

	Finoris		Tecturis S		
Finish					
ComfortZone	110/160	–	110 - 240	150	150
Projection (mm)	169	168/228	130 - 167	139	139
CoolStart	–	–	■	■	–
EcoSmart+	–	–	■	■	■
EcoSmart	■	■	■	–	–
QuickClean	–	–	–	–	–
AirPower	–	–	■	■	■
Remove&Clean	–	–	–	–	–
Pillar tap	–	–	–	–	–
For open water heaters	–	–	–	–	–
Swivel spout	–	–	■	–	–
Wall installation	–	■	–	–	–
Electronic basin mixer	–	–	–	–	–
from page	458	459	466	468	469

■ available depending on the model
– not available

	Metris			Finoris	
Finish					
ComfortZone	230	100	–	100 - 260	230
Projection (mm)	155	89	165/225	126 - 208	178/191
CoolStart	–	–	–	■	–
EcoSmart+	–	–	–	–	–
EcoSmart	■	■	■	■	■
QuickClean	■	■	■	–	■
AirPower	■	■	■	–	–
Remove&Clean	–	–	–	–	–
Pillar tap	–	■	–	■	–
For open water heaters	–	–	–	–	–
Swivel spout	■	–	–	–	■
Wall installation	–	–	■	–	–
Electronic basin mixer	–	–	–	–	–
from page	448	448	449	456	457

	Tecturis S		Tecturis E		
Finish					
ComfortZone	80/110	–	110 - 240	150	150
Projection (mm)	108/116	165/225	155 - 197	158	158
CoolStart	■	–	■	■	–
EcoSmart+	■	■	■	■	■
EcoSmart	■	–	■	–	–
QuickClean	–	–	–	–	–
AirPower	■	■	■	■	■
Remove&Clean	–	–	–	–	–
Pillar tap	■	–	–	–	–
For open water heaters	–	–	–	–	–
Swivel spout	–	–	■	–	–
Wall installation	–	■	–	–	–
Electronic basin mixer	–	–	–	–	–
from page	469	471	477	479	480

Overview Basin Mixers

	Tecturis E		Vivenis		
Finish					
ComfortZone	80/110	–	80 - 250	210	90
Projection (mm)	122/144	225	133 - 191	139	150
CoolStart	■	–	■	–	–
EcoSmart+	■	■	–	–	–
EcoSmart	■	–	■	■	■
QuickClean	–	–	–	–	–
AirPower	■	■	■	■	■
Remove&Clean	–	–	–	–	–
Pillar tap	■	–	■	–	–
For open water heaters	–	–	–	–	–
Swivel spout	–	–	–	■	–
Wall installation	–	■	–	–	–
Electronic basin mixer	–	–	–	–	–
from page	480	482	490	491	492

	Talis Select E	Talis E			
Finish					
ComfortZone	110/240	110	80 - 240	150	150
Projection (mm)	112/183	111	96 - 183	141	112
CoolStart	–	–	■	–	–
EcoSmart+	–	–	–	–	–
EcoSmart	■	■	■	■	■
QuickClean	■	–	■	■	■
AirPower	■	■	■	■	■
Remove&Clean	–	–	–	–	–
Pillar tap	–	■	■	–	–
For open water heaters	–	–	■	–	–
Swivel spout	–	–	–	–	–
Wall installation	–	–	–	–	–
Electronic basin mixer	–	–	–	–	–
from page	511	511	512	515	516

■ available depending on the model
– not available

	Vivenis	Talis S			
Finish					
ComfortZone	–	80 - 190	140/250	–	40
Projection (mm)	192	93 - 131	152/201	165/225	83
CoolStart	–	■	–	–	–
EcoSmart+	–	–	–	–	–
EcoSmart	■	■	■	■	■
QuickClean	–	■	■	■	■
AirPower	■	■	■	■	■
Remove&Clean	–	–	–	–	–
Pillar tap	–	■	–	–	■
For open water heaters	–	–	–	–	–
Swivel spout	–	–	–	–	–
Wall installation	■	–	–	■	–
Electronic basin mixer	–	–	–	–	–
from page	493	500	501	503	502

	Talis E	Focus			
Finish					
ComfortZone	–	70 - 230	70/100	240	100
Projection (mm)	165/225	101 - 185	101/119	160	120
CoolStart	–	■	■	–	–
EcoSmart+	–	–	–	–	–
EcoSmart	■	■	■	■	■
QuickClean	■	■	–	–	■
AirPower	■	■	–	■	■
Remove&Clean	–	–	–	–	–
Pillar tap	–	■	–	–	–
For open water heaters	–	■	–	–	–
Swivel spout	–	–	–	■	–
Wall installation	■	–	–	–	–
Electronic basin mixer	–	–	–	–	–
from page	516	526	528	529	530

Overview Basin Mixers

	Focus		Rebris S		
Finish	◎	◎	◎ ●	◎ ●	◎
ComfortZone	–	–	80 - 240	210	110
Projection (mm)	180	180	121 - 169	154	134
CoolStart	–	–	■	–	–
EcoSmart+	–	–	■	–	–
EcoSmart	■	■	■	■	■
QuickClean	■	–	–	–	–
AirPower	■	–	■	■	■
Remove&Clean	–	–	■	–	–
Pillar tap	–	–	■	–	–
For open water heaters	–	–	–	–	–
Swivel spout	–	–	–	■	–
Wall installation	■	■	–	–	–
Electronic basin mixer	–	–	–	–	–
from page	530	531	542	543	544

	Logis				
Finish	◎ ●	◎ ●	◎	◎ ●	◎
ComfortZone	110/240	210	150	80	150
Projection (mm)	121/172	154	145	84	109
CoolStart	■	–	–	–	–
EcoSmart+	–	–	–	–	–
EcoSmart	■	■	■	■	■
QuickClean	–	–	–	–	–
AirPower	■	■	■	■	■
Remove&Clean	■	–	–	–	–
Pillar tap	–	–	–	■	–
For open water heaters	–	–	–	–	–
Swivel spout	–	■	■	–	–
Wall installation	–	–	–	–	–
Electronic basin mixer	–	–	–	–	–
from page	567	568	568	569	569

■ available depending on the model
– not available

	Rebris S	Rebris E			Logis
Finish					
ComfortZone	–	80 - 240	210	–	70 - 190
Projection (mm)	200	121 - 169	154	200	107 - 166
CoolStart	–	■	–	–	■
EcoSmart+	–	■	–	–	–
EcoSmart	■	■	■	■	■
QuickClean	–	–	–	–	–
AirPower	■	■	■	■	■
Remove&Clean	–	■	–	–	–
Pillar tap	–	■	–	–	–
For open water heaters	–	–	–	–	■
Swivel spout	–	–	■	–	–
Wall installation	■	–	–	■	–
Electronic basin mixer	–	–	–	–	–
from page	545	553	554	555	564

	Logis			Vernis Blend	
Finish					
ComfortZone	–	–	–	70 - 190	70
Projection (mm)	195	206	194	89 - 169	93
CoolStart	–	–	–	■	–
EcoSmart+	–	–	–	–	–
EcoSmart	■	■	■	■	■
QuickClean	–	–	■	–	–
AirPower	■	■	■	■	■
Remove&Clean	–	–	–	–	–
Pillar tap	–	–	–	–	■
For open water heaters	–	–	–	–	–
Swivel spout	–	–	–	–	–
Wall installation	■	■	■	–	–
Electronic basin mixer	–	–	–	–	–
from page	570	570	571	586	589

Overview Basin Mixers

	Vernis Blend			Vernis Shape	
Finish					
ComfortZone	200	150	–	70 - 190	70
Projection (mm)	166	166	207	89 - 181	92
CoolStart	–	–	–	■	–
EcoSmart+	–	–	–	–	–
EcoSmart	■	■	■	■	■
QuickClean	–	–	–	–	–
AirPower	–	–	■	■	■
Remove&Clean	–	–	–	–	–
Pillar tap	–	–	–	–	■
For open water heaters	–	–	–	–	–
Swivel spout	■	–	–	–	–
Wall installation	–	–	■	–	–
Electronic basin mixer	–	–	–	–	–
from page	589	590	590	603	604

	Vernis Blend	
Finish		
ComfortZone	100	100
Projection (mm)	112	112
CoolStart	–	–
EcoSmart+	–	–
EcoSmart	■	■
QuickClean	–	–
AirPower	■	■
Remove&Clean	–	–
Pillar tap	■	–
For open water heaters	–	–
Swivel spout	–	–
Wall installation	–	–
Electronic basin mixer	■	■
from page	591	591

■ available depending on the model
– not available

	Vernis Shape			Metris S	Focus
Finish					
ComfortZone	200	150	–	150	130
Projection (mm)	166	166	207	128	127
CoolStart	–	–	–	–	–
EcoSmart+	–	–	–	–	–
EcoSmart	■	■	■	■	■
QuickClean	–	–	–	–	–
AirPower	–	–	■	■	■
Remove&Clean	–	–	–	–	–
Pillar tap	–	–	–	–	–
For open water heaters	–	–	–	–	–
Swivel spout	■	–	–	–	–
Wall installation	–	–	■	–	–
Electronic basin mixer	–	–	–	■	■
from page	604	605	605	616	531

Sustainability

CoolStart

With this energy saving tap hot water only flows when the lever is actively moved - while standard taps already consume energy when the lever is opened in the basic position. CoolStart supports reducing the resources used, CO2 emissions and costs.

EcoSmart+

Enjoy a rich water experience with our EcoSmart+ products while saving up to 20% more water compared to our standard EcoSmart faucets. The products convince with a maximum flow rate of 4 l/min and thus also save energy.

Water flow control

This water volume can be precisely regulated, so you can use less of this precious resource. Individually adjustable for all those who usually find a gentle water flow more pleasant.

EcoSelection

Effortless water saving: The special Eco cartridge indicates with a slight resistance that about half of the flow rate has been reached. However, if more water is needed, the flow can easily be increased.

EcoSmart

hansgrohe standard taps are equipped with our EcoSmart technology to save water and energy – since 2010. While enjoying the full water experience, it consumes max. 5 l/min. Good for a conscious consumption of water and energy.

Technologies

ComfortZone

More elbow room when washing hands, a comfortable way to wash hair or just fill containers: The better the tap fits the space, the more flexible the options become. We call the area between the tap and the ceramics the ComfortZone because you can use it however you like.

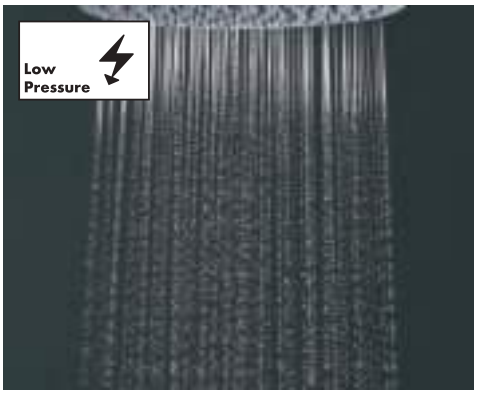

LowPressure

Low water pressure? Taps and showers equipped with LowPressure technology can be used even with water pressures of only 0.2 bar. Suitable for boilers/heat exchangers.

Pull-out Faucet

The pull-out function on the basin tap expands the operating radius for maximum flexibility and simplified bathroom routines. The tap and pullout spray are comfortable and intuitive to use, for example when washing hair at the basin.

QuickClean

Who actually likes cleaning? Limescale deposits and dirt disappear in an instant with this technology. Simply rub the flexible silicone discs or nozzles with a finger. It's fast and keeps cleaning to a minimum.

Remove & Clean

Limescale and dirt on the outlet can be removed in no time - without tools. If residue has formed, simply use a coin to unscrew the aerator. Place it in citric acid for ten minutes, rinse, screw it back in with a coin, and you're done.

Select

The Select button replaces the diverter on the bath tub. At the touch of a button, water comes out of the bath filler or shower head. In the idle position, the system returns to the bath filler so that no-one gets accidentally sprayed with water.

Technologies

Select

Fans of intuitive design can start, pause and stop the flow of water at the touch of a button. The Select push button simplifies routines such as shaving or brushing teeth and can also be operated using the back of the hand or an elbow.

AirPower

Mixes generous quantities of air into the water. The enriched droplets are luxurious, light and soothing on the skin and cause less splash in the wash basin. For a more efficient use of the precious resource that is water.

SensorActivation

The sensor on this contactless tap acts like a motion sensor as it responds to changes in the infrared rays. Water only flows once it detects warmth from hands. This is economical and environmentally friendly as well as contactless and hygienic.

Spray types

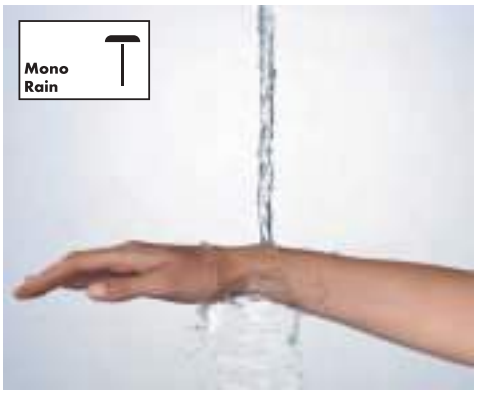

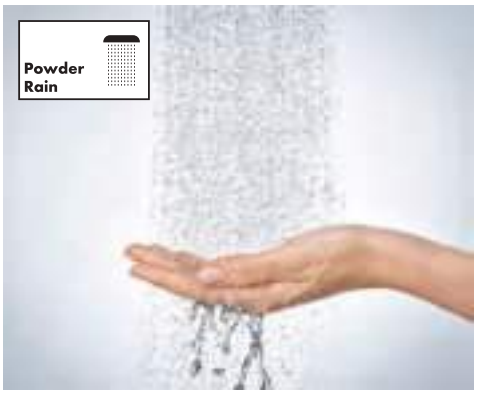

MonoRain

Focused and extremly gentle spray for feel-good wellness. The focused spray type is perfect for hydrotherapeutic showering and cold water treatments. For anyone who loves winding down in their shower or bath tub.

PowderRain

Relaxing, micro-fine droplets that gently and quietly envelop the body. The water is transformed into a delicate cocoon that sensually embraces the body. For sensual showering and indulgent, deep relaxation.

Rain

Invigorating and energising everyday showering indulgence with a satisfyingly full shower rain. With its small outlets on the shower head, this spray type works efficiently to thoroughly rinse out shampoo.

Spray types

RainAir

Gentle droplets enriched with air from the luxurious shower rain feel silky soft on the skin for an indulgent shower. Additionally, this spray type is efficient and thorough enough to rinse out shampoo.

RainFlow

Powerful water stream that bathes the entire body and feels like a waterfall for wonderful relaxation. The stylish spray feels natural as it is poured over the neck and shoulders. It pampers and is like a waterfall in the bathroom.

Whirl

Rotating water sprays to pleasantly shower away everyday tensions. Individual sprays of water flow around each other in a helical pattern, helping to relieve tension with their gentle massaging action.

IntenseRain

Stimulating water sprays that wash away tiredness and immediately make the person feel nice and awake. The perfect and quick way to feel fit for the day ahead. The powerful spray also effortlessly rinses shampoo out of hair.

Finish

Brushed Black Chrome

-340

Brushed Bronze

-140

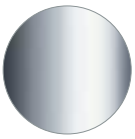

Chrome

-000

Matt Black

-670

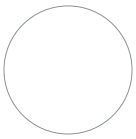

Matt White

-700

Polished Gold Optic

-990

Metropol

Metropol Single lever basin mixer 100 with lever handle for handrinse basins with push-open waste set

Features

- consists of: single lever basin mixer, waste set
- ComfortZone: 100
- projection: 127 mm
- spout height: 89 mm
- handle variant: lever handle
- spray type: normal spray
- maximum flow rate at 3 bar: 5 l/min
- ceramic cartridge
- temperature limitation adjustable
- suitable for continuous flow water heaters
- push-open waste set G 1¼
- material waste set: metal
- connection type: G ⅜ hose connections
- connection dimension: DN15
- EU taxonomy: max. 6 l/min - Substantial Contribution (SC) possible

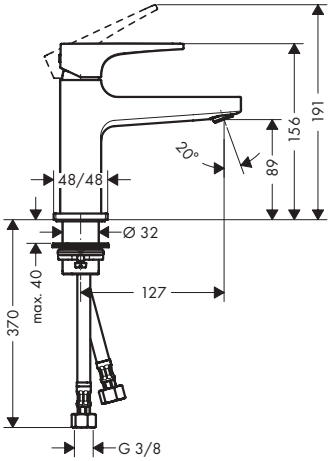

Sustainability

EcoSmart

Technologies

Quick Clean · AirPower · Comfort Zone

Certificates/declarations

EPD

Finish	Code no.
Chrome	32500000
Brushed Bronze	32500140
Brushed Black Chrome	32500340
Matt Black	32500670
Matt White	32500700
Polished Gold Optic	32500990

Measurements within scale drawings are in mm.
Technical specifications and units of measure are subject to change.

Metropol Single lever basin mixers

Features of all variants

- consists of: single lever basin mixer, waste set
- handle variant: lever handle
- spray type: normal spray
- maximum flow rate at 3 bar: 5 l/min
- ceramic cartridge
- temperature limitation adjustable
- suitable for continuous flow water heaters
- material waste set: metal
- connection type: G ⅜ hose connections
- connection dimension: DN15
- EU taxonomy: max. 6 l/min - Substantial Contribution (SC) possible

100

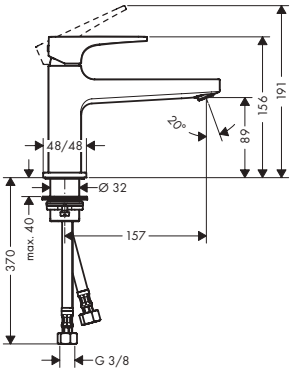

110

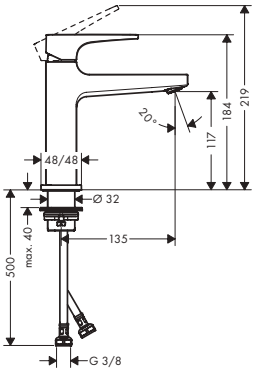

260

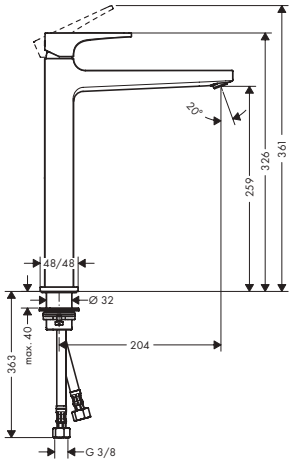

Sustainability

CoolStart, EcoSmart

Technologies

Quick Clean, AirPower, Comfort Zone

Certificates/declarations

EPD

Overview variants

ComfortZone	Projection (mm)	Spout height (mm)	Waste set	CoolStart	For wash bowls	Finish	Code no.
100	157	89	push-open	■	–	Chrome	32503000
110	135	117	push-open	■	–	Chrome	32508000
110	135	117	push-open	–	–	Chrome	32507000
						Brushed Bronze	32507140
						Brushed Black Chrome	32507340
						Matt Black	32507670
						Matt White	32507700
						Polished Gold Optic	32507990
110	135	117	pop-up	–	–	Chrome	32506000
260	204	259	push-open	–	■	Chrome	32512000
						Brushed Bronze	32512140
						Brushed Black Chrome	32512340
						Matt Black	32512670
						Matt White	32512700
						Polished Gold Optic	32512990

Measurements within scale drawings are in mm.
Technical specifications and units of measure are subject to change.

Metropol Single lever basin mixer 230 with lever handle and push-open waste set

Features

- consists of: single lever basin mixer, waste set
- ComfortZone: 230
- projection: 165 mm
- spout height: 226 mm
- handle variant: lever handle
- swivel range 120°
- spray type: normal spray
- maximum flow rate at 3 bar: 5 l/min
- ceramic cartridge
- temperature limitation adjustable
- suitable for continuous flow water heaters
- push-open waste set G 1¼
- material waste set: metal
- connection type: G ⅜ hose connections
- connection dimension: DN15
- handle position on the side: bottom-side at the base body (not suitable for wash bowls)
- EU taxonomy: max. 6 l/min - Substantial Contribution (SC) possible

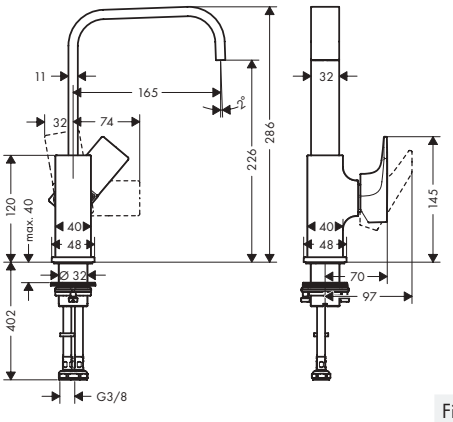

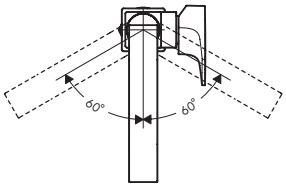

Sustainability

Technologies

Certificates/declarations

Finish	Code no.
Chrome	32511000
Brushed Bronze	32511140
Brushed Black Chrome	32511340
Matt Black	32511670
Matt White	32511700
Polished Gold Optic	32511990

Metropol Pillar tap 100 with lever handle for cold water or pre-adjusted water without waste set

Features

- ComfortZone: 100
- projection: 127 mm
- spout height: 89 mm
- handle variant: lever handle
- spray type: normal spray
- maximum flow rate at 3 bar: 5 l/min
- ceramic cartridge
- for cold water connection
- connection type: G ⅜ hose connection
- connection dimension: DN15
- EU taxonomy: max. 6 l/min - Substantial Contribution (SC) possible

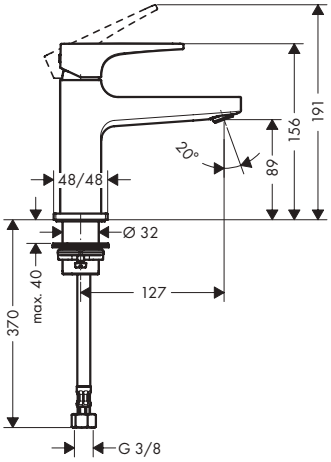

Sustainability

Technologies

Finish	Code no.
Chrome	32501000

Measurements within scale drawings are in mm.
Technical specifications and units of measure are subject to change.

Metropol 3-hole basin mixers

Features of all variants

- consists of: 3-hole basin mixer, waste set
- handle variant: lever handle
- maximum flow rate at 3 bar: 5 l/min
- ceramic valves hot/cold 90°
- suitable for continuous flow water heaters
- push-open waste set G 1¼
- material waste set: metal
- connection type: G ⅜ hose connections
- connection dimension: DN15
- EU taxonomy: max. 6 l/min - Substantial Contribution (SC) possible

110

160

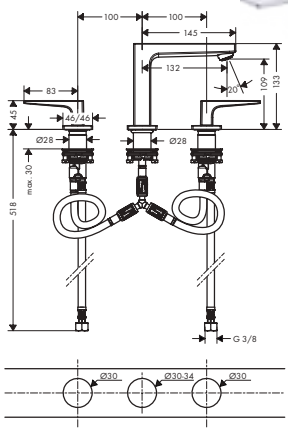

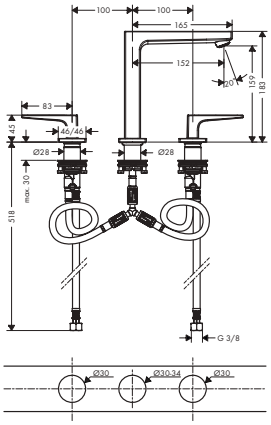

Sustainability

EcoSmart

Technologies

Quick Clean | AirPower | Comfort Zone

Certificates/declarations

EPD

Overview variants

ComfortZone	Projection (mm)	Spout height (mm)	Handle version	Finish	Code no.
110	132	109	lever	Chrome	32514000
160	152	159	lever	Chrome	32515000
				Brushed Bronze	32515140
				Brushed Black Chrome	32515340
				Matt Black	32515670
				Matt White	32515700
				Polished Gold Optic	32515990

Metropol Single lever basin mixers for concealed installation wall-mounted

Features of all variants

- consists of: single lever basin mixer for concealed installation wall-mounted, waste set
- handle variant: lever handle
- spray type: normal spray
- maximum flow rate at 3 bar: 5 l/min
- ceramic cartridge
- temperature limitation adjustable
- suitable for continuous flow water heaters
- non-closing waste set
- material waste set: metal
- connection type: basic set
- connection dimension: DN15
- handle can be positioned on the right or left, depending on the basic set installation
- EU taxonomy: max. 6 l/min - Substantial Contribution (SC) possible

165

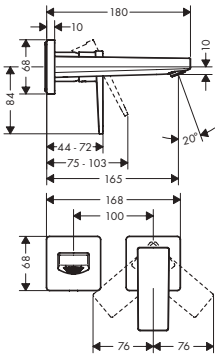

225

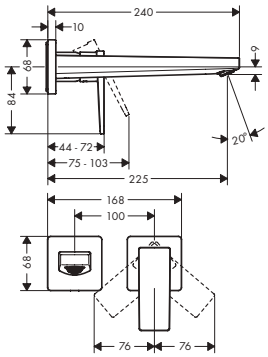

Sustainability

EcoSmart

Technologies

Quick Clean | AirPower

Certificates/declarations

EPD

For more information about this product, please see the next page.

Measurements within scale drawings are in mm.
Technical specifications and units of measure are subject to change.

Metropol Single lever basin mixers for concealed installation wall-mounted

Overview variants

Projection (mm)	Handle version	Finish	Code no.
165	lever	Chrome	32525000
225	lever	Chrome	32526000
		Brushed Bronze	32526140
		Brushed Black Chrome	32526340
		Matt Black	32526670
		Matt White	32526700
		Polished Gold Optic	32526990

Required parts:		Code no.
	Basic set for single lever basin mixer for concealed installation wall-mounted	13622180

Metropol Single lever bidet mixer with lever handle and push-open waste set

Features

- consists of: single lever bidet mixer, waste set
- projection: 129 mm
- spout height: 100 mm
- ball-pivot joint
- spray type: laminar spray
- maximum flow rate at 3 bar: 7,5 l/min
- ceramic cartridge
- temperature limitation adjustable
- suitable for continous flow water heaters
- material waste set: metal
- connection type: G ⅜ hose connections
- connection dimension: DN15

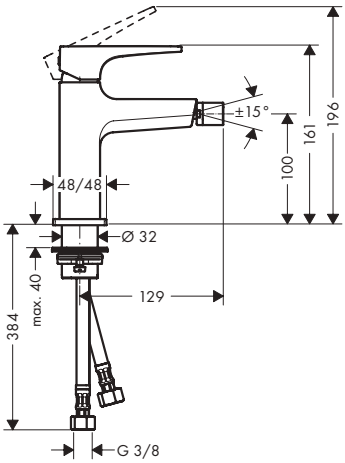

Certificates/declarations

Finish	Code no.
Chrome	32520000
Brushed Bronze	32520140
Brushed Black Chrome	32520340
Matt Black	32520670
Matt White	32520700
Polished Gold Optic	32520990

Measurements within scale drawings are in mm.
Technical specifications and units of measure are subject to change.

Metropol Single lever bath mixer floor-standing with lever handle

Features

- consists of: single lever bath mixer floor standing, baton hand shower, shower hose, shower holder
- 2 functions
- projection: 235 mm
- spray type mixer: normal spray
- spray type hand shower: Rain, MonoRain
- maximum flow rate at 3 bar: 20 l/min
- flow rate for bath spout at 3 bar: 20 l/min
- ceramic cartridge
- temperature limitation adjustable
- diverter with automatic resetting
- non-return valve
- connection type: basic set
- deck mounted
- min. operating pressure: 1 bar
- max. operating pressure: 10 bar

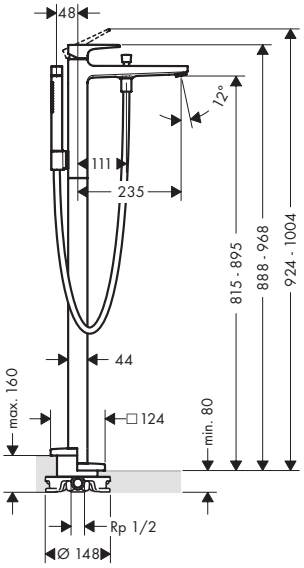

Technologies

Spray types

Finish	Code no.
Chrome	32532000
Brushed Bronze	32532140
Brushed Black Chrome	32532340
Matt Black	32532670
Matt White	32532700
Polished Gold Optic	32532990

Required parts:	Code no.
Basic set for mixers floor-standing	10452180

Optional parts:	Code no.
Sealing foil for basic set bath mixer floor-standing	96441000

Measurements within scale drawings are in mm.
Technical specifications and units of measure are subject to change.

Metropol Single lever bath mixer for exposed installation with lever handle

Features

- 2 functions
- projection: 180 mm
- centre distance: 150 ± 12 mm
- spray type mixer: normal spray
- maximum flow rate at 3 bar: 22 l/min
- flow rate for bath spout at 3 bar: 22 l/min
- flow rate of hand shower at 3 bar: 16 l/min
- ceramic cartridge
- temperature limitation adjustable
- diverter with automatic resetting
- protected against backflow, according to DIN EN 1717
- suitable for continous flow water heaters
- connection dimension: DN15
- connection type: S-connections
- wall-mounted
- min. operating pressure: 1 bar
- max. operating pressure: 10 bar

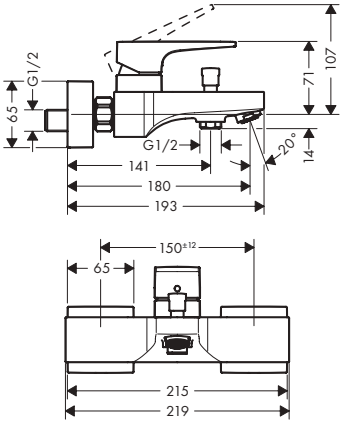

Technologies

Quick clean
AirPower

Certificates/declarations

EPD

Finish	Code no.
Chrome	32540000
Brushed Bronze	32540140
Brushed Black Chrome	32540340
Matt Black	32540670
Matt White	32540700
Polished Gold Optic	32540990

Metropol Single lever bath mixers for concealed installation for iBox universal

Features of all variants

- 2 functions
- ceramic cartridge
- temperature limitation adjustable
- diverter with automatic resetting
- with silencer
- connection type: basic set
- wall-mounted
- min. operating pressure: 1 bar
- max. operating pressure: 10 bar

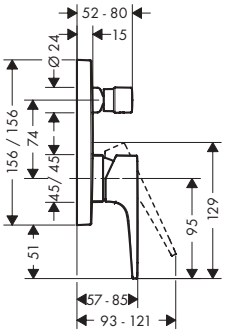

Certificates/declarations

EPD

Overview variants

Handle version	Security combination EN 1717	Max. flow rate at 3 bar (l/min)	Finish	Code no.
lever	–	29	Chrome	32545000
			Brushed Bronze	32545140
			Brushed Black Chrome	32545340
			Matt Black	32545670
			Matt White	32545700
			Polished Gold Optic	32545990

Measurements within scale drawings are in mm.
Technical specifications and units of measure are subject to change.

Metropol Single lever bath mixers for concealed installation for iBox universal

Overview variants

Handle version	Security combination EN 1717	Max. flow rate at 3 bar (l/min)	Finish	Code no.
lever	■	25	Chrome	32546000
			Brushed Bronze	32546140
			Brushed Black Chrome	32546340
			Matt Black	32546670
			Matt White	32546700
			Polished Gold Optic	32546990

Required parts (choose one):			Code no.
Option 1		iBox universal 2 Basic set	01500180
	+	Adapter plate for iBox universal 2	13588000
Option 2		iBox universal Basic set	01800180

Metropol Bath spout floor-standing

Features

- 1 function
- connection type: basic set
- projection: 235 mm
- free-standing installation
- maximum flow rate at 3 bar: 21 l/min
- spray type: normal spray

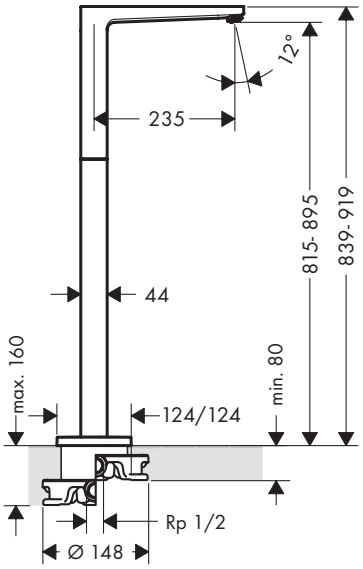

Technologies

Finish	Code no.
Chrome	32531000

Required parts:		Code no.
	Basic set for mixers floor-standing	10452180

Optional parts:		Code no.
	Sealing foil for basic set bath mixer floor-standing	96441000

Measurements within scale drawings are in mm.
Technical specifications and units of measure are subject to change.

Metropol Bath spout

Features

- 1 function
- connection type: G ¾
- projection: 167.5 mm
- wall-mounted
- maximum flow rate at 3 bar: 21 l/min
- spray type: normal spray

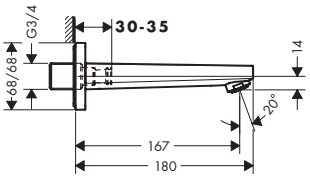

Technologies

Certificates/declarations

Finish	Code no.
Chrome	32542000

Optional parts:	Code no.
Socket for G1/2 connection	95626000

Metropol Bath spout

Features

- 1 function
- projection: 185 mm
- wall-mounted
- maximum flow rate at 3 bar: 21 l/min
- connection dimension: DN20
- spray type: RainFlow

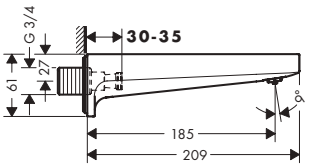

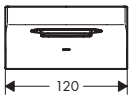

Technologies

Spray types

Certificates/declarations

Finish	Code no.
Chrome	32543000
Brushed Bronze	32543140
Brushed Black Chrome	32543340
Matt Black	32543670
Matt White	32543700
Polished Gold Optic	32543990

Measurements within scale drawings are in mm.
Technical specifications and units of measure are subject to change.

Metropol 2-hole rim mounted single lever bath mixer with lever handle

Features

- 2 functions
- ceramic cartridge
- temperature limitation adjustable
- connection dimension: DN15
- connection type: basic set
- installation on bath rim
- min. operating pressure: 1 bar
- max. operating pressure: 10 bar

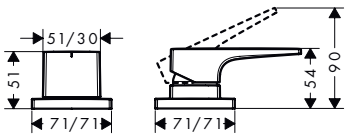

Finish	Code no.
Chrome	32548000

Required parts:	Code no.
Basic set for 2-hole rim mounted bath mixer	13159180

Metropol 3-hole rim mounted single lever bath mixer with lever handle for Secuflex

Features

- consists of: 3-hole rim mounted single lever bath mixer, hand shower, shower holder
- 2 functions
- projection: 197 mm
- spray type mixer: normal spray
- spray type hand shower: Rain, RainAir
- maximum pull-out length of hand shower: 1.10 m
- maximum flow rate at 3 bar: 19 l/min
- flow rate for bath spout at 3 bar: 19 l/min
- flow rate of hand shower at 3 bar: 15 l/min
- temperature limitation adjustable
- connection dimension: DN15
- connection type: basic set
- installation on bath rim
- min. operating pressure: 1 bar
- max. operating pressure: 10 bar

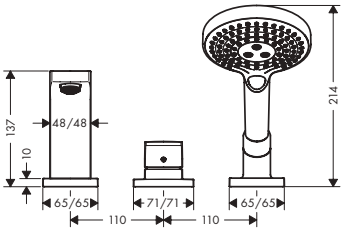

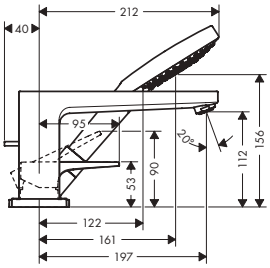

Technologies

Spray types

Finish	Code no.
Chrome	32550000

Required parts:	Code no.
Basic set for 3-hole rim mounted single lever bath mixer	13437180

Metropol 3-hole rim mounted single lever bath mixer with lever handle

Features

- consists of: 3-hole rim mounted single lever bath mixer, hand shower, shower holder
- 2 functions
- projection: 197 mm
- spray type mixer: normal spray
- spray type hand shower: Rain, RainAir, Whirl
- maximum pull-out length of hand shower: 1.60 m
- flow rate of hand shower at 3 bar: 14 l/min
- ceramic valves hot/ cold 180°
- temperature limitation adjustable
- connection dimension: DN15
- connection type: basic set
- installation on bath rim
- min. operating pressure: 1 bar
- max. operating pressure: 10 bar
- no additional maintenance opening required

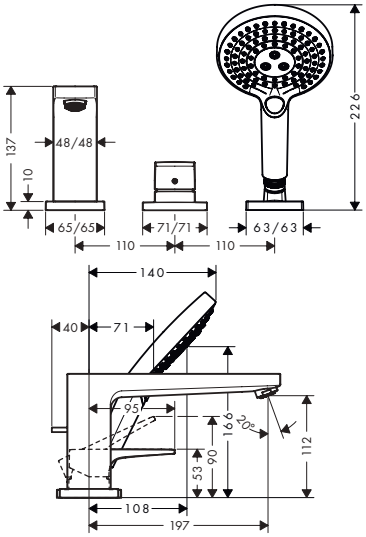

Technologies

Spray types

Finish	Code no.
Chrome	32551000

Required parts:	Code no.
Basic set for 3-hole rim mounted single lever bath mixer	13439180

Metropol 4-hole rim mounted bath mixer with lever handles for Secuflex

Features

- consists of: 4-hole rim mounted bath mixer, hand shower, shower holder
- 2 functions
- projection: 197 mm
- spray type mixer: normal spray
- spray type hand shower: Rain, RainAir, Whirl
- maximum pull-out length of hand shower: 1.10 m
- maximum flow rate at 3 bar: 24 l/min
- flow rate for bath spout at 3 bar: 24 l/min
- flow rate of hand shower at 3 bar: 15 l/min
- ceramic valves hot/cold 90°
- connection dimension: DN15
- connection type: basic set
- installation on bath rim
- min. operating pressure: 1 bar
- max. operating pressure: 10 bar
- no additional maintenance opening required

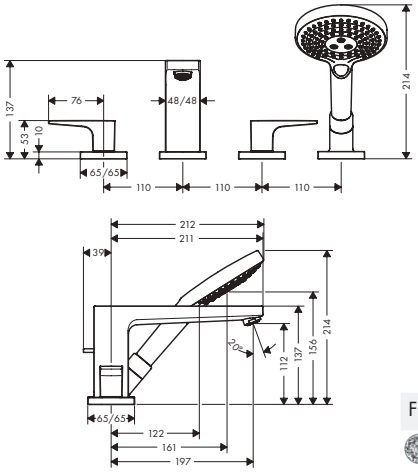

Technologies

Spray types

Finish	Code no.
Chrome	32552000

Required parts:	Code no.
Basic set for 4-hole rim mounted bath mixer	13444180

Measurements within scale drawings are in mm.
Technical specifications and units of measure are subject to change.

Metropol 4-hole rim mounted bath mixer with lever handles

Features

- consists of: 4-hole rim mounted bath mixer, hand shower, shower holder
- 2 functions
- projection: 197 mm
- spray type mixer: normal spray
- spray type hand shower: Rain, RainAir, Whirl
- maximum pull-out length of hand shower: 1.60 m
- maximum flow rate at 3 bar: 23 l/min
- flow rate for bath spout at 3 bar: 23 l/min
- flow rate of hand shower at 3 bar: 15 l/min
- ceramic valves hot/cold 90°
- connection dimension: DN15
- connection type: basic set
- installation on bath rim
- min. operating pressure: 1 bar
- max. operating pressure: 10 bar
- no additional maintenance opening required

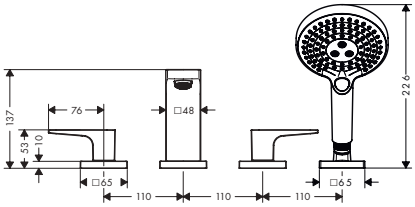

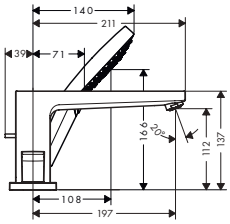

Technologies

Spray types

Finish	Code no.
Chrome	32553000

Required parts:	Code no.
Basic set for 4-hole rim mounted bath mixer	13244180

Metropol Single lever shower mixer for exposed installation with lever handle

Features

- 1 function
- centre distance: 150 ± 12 mm
- maximum flow rate at 3 bar: 16 l/min
- flow rate of hand shower at 3 bar: 16 l/min
- ceramic cartridge
- temperature limitation adjustable
- non-return valve
- with silencer
- hose connection DN15
- connection dimension: DN15
- min. operating pressure: 1 bar
- max. operating pressure: 10 bar
- connection type: S-connections

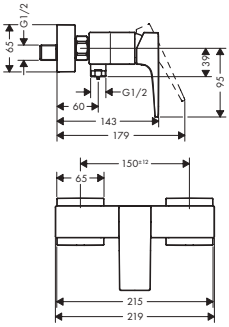

Certificates/declarations

EPD

Finish	Code no.
Chrome	32560000
Brushed Bronze	32560140
Brushed Black Chrome	32560340
Matt Black	32560670
Matt White	32560700
Polished Gold Optic	32560990

Measurements within scale drawings are in mm.
Technical specifications and units of measure are subject to change.

Metropol Single lever shower mixer for concealed installation with lever handle for iBox universal

Features

- 1 function
- maximum flow rate at 3 bar: 29,3 l/min
- ceramic cartridge
- temperature limitation adjustable
- with silencer
- min. operating pressure: 1 bar
- max. operating pressure: 10 bar
- connection type: basic set

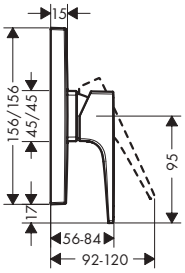

Certificates/declarations

EPD

Finish	Code no.
Chrome	32565000
Brushed Bronze	32565140
Brushed Black Chrome	32565340
Matt Black	32565670
Matt White	32565700
Polished Gold Optic	32565990

Required parts (choose one):			Code no.
Option 1		iBox universal 2 Basic set	01500180
+		Adapter plate for iBox universal 2	13588000
Option 2		iBox universal Basic set	01800180

Measurements within scale drawings are in mm.
Technical specifications and units of measure are subject to change.

Metris

Metris Single lever basin mixers for hand washbasins

Features of all variants

- ComfortZone: 100
- projection: 89 mm
- spout height: 93 mm
- handle variant: lever handle
- spray type: normal spray
- maximum flow rate at 3 bar: 5 l/min
- ceramic cartridge
- temperature limitation adjustable
- suitable for continuous flow water heaters
- connection type: G ⅜ hose connections
- connection dimension: DN15
- EU taxonomy: max. 6 l/min - Substantial Contribution (SC) possible

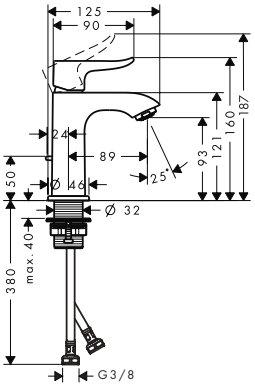

Sustainability

EcoSmart

Technologies

Quick Clean | AirPower | Comfort Zone

Certificates/declarations

EPD

Overview variants

ComfortZone	Projection (mm)	Spout height (mm)	Waste set	Material waste set	Finish	Code no.
100	89	93	pop-up	metal	Chrome	31088000
100	89	93	without	–	Chrome	31186000

Metris Single lever basin mixers

Features of all variants

- handle variant: lever handle
- spray type: normal spray
- maximum flow rate at 3 bar: 5 l/min
- ceramic cartridge
- temperature limitation adjustable
- suitable for continuous flow water heaters
- connection type: G ⅜ hose connections
- connection dimension: DN15
- EU taxonomy: max. 6 l/min - Substantial Contribution (SC) possible

110

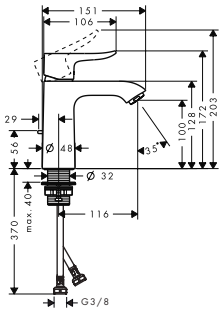

200

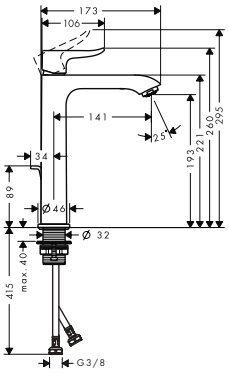

260

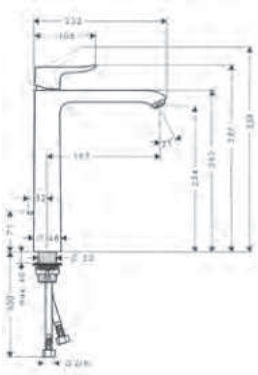

Sustainability

CoolStart | EcoSmart

Technologies

Quick Clean | AirPower | Comfort Zone

Certificates/declarations

EPD

Overview variants

ComfortZone	Projection (mm)	Spout height (mm)	Waste set	Material waste set	CoolStart	For wash bowls	Finish	Code no.
110	116	100	pop-up	metal	■	–	Chrome	31121000
110	116	100	pop-up	metal	–	–	Chrome	31080000
110	116	100	without	–	–	–	Chrome	31084000
200	141	193	pop-up	metal	–	–	Chrome	31183000
200	141	193	without	–	–	–	Chrome	31185000

Measurements within scale drawings are in mm.
Technical specifications and units of measure are subject to change.

Metris Single lever basin mixers

Overview variants

ComfortZone	Projection (mm)	Spout height (mm)	Waste set	Material waste set	CoolStart	For wash bowls	Finish	Code no.
260	197	254	pop-up	metal	–	■	Chrome	31082000
260	197	254	without	–	–	■	Chrome	31184000

Metris Single lever basin mixers LowFlow

Features of all variants

- ComfortZone: 110
- projection: 116 mm
- spout height: 100 mm
- handle variant: lever handle
- spray type: normal spray
- maximum flow rate at 3 bar: 3,5 l/min
- ceramic cartridge
- temperature limitation adjustable
- suitable for continuous flow water heaters
- connection type: G ⅜ hose connections
- connection dimension: DN15
- EU taxonomy: max. 6 l/min - Substantial Contribution (SC) possible

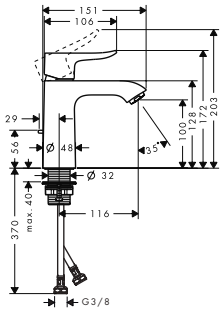

Sustainability

Technologies

Overview variants

ComfortZone	Projection (mm)	Spout height (mm)	Waste set	Material waste set	Finish	Code no.
110	116	100	pop-up	metal	Chrome	31203000
110	116	100	without	–	Chrome	31204000

Metris Single lever basin mixer 110 for LowPressure/vented hot water cylinders with pop-up waste set

Features

- consists of: single lever basin mixer, waste set
- ComfortZone: 110
- projection: 116 mm
- spout height: 100 mm
- handle variant: lever handle
- spray type: normal spray
- maximum flow rate at 3 bar: 5 l/min
- ceramic cartridge
- temperature limitation adjustable
- pop-up waste set G 1¼
- material waste set: metal
- connection type: G ⅜ hose connections
- EU taxonomy: max. 6 l/min - Substantial Contribution (SC) possible

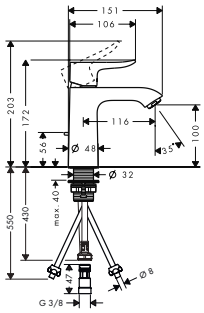

Technologies

Finish	Code no.
Chrome	31074000

Measurements within scale drawings are in mm.
Technical specifications and units of measure are subject to change.

Metris Single lever basin mixers with swivel spout

Features of all variants

- ComfortZone: 230
- projection: 155 mm
- spout height: 230 mm
- handle variant: lever handle
- swivel range 120°
- spray type: normal spray
- maximum flow rate at 3 bar: 5 l/min
- ceramic cartridge
- temperature limitation adjustable
- suitable for continuous flow water heaters
- connection type: G ⅜ hose connections
- connection dimension: DN15
- handle position on the side: bottom-side at the base body (not suitable for wash bowls)
- EU taxonomy: max. 6 l/min - Substantial Contribution (SC) possible

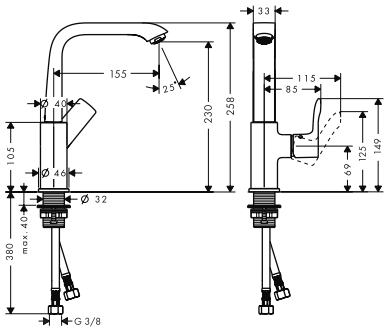

Sustainability

Technologies

Certificates/declarations

Overview variants

ComfortZone	Projection (mm)	Spout height (mm)	Waste set	Material waste set	Finish	Code no.
230	155	230	pop-up	metal	Chrome	31087000
230	155	230	push-open	metal	Chrome	31187000
230	155	230	without	–	Chrome	31081000

Metris Pillar tap 100 for cold water or pre-adjusted water without waste set

Features

- ComfortZone: 100
- projection: 89 mm
- spout height: 93 mm
- handle variant: lever handle
- spray type: normal spray
- maximum flow rate at 3 bar: 5 l/min
- ceramic valves 90°
- for cold water connection
- connection type: G ⅜ hose connection
- connection dimension: DN15
- EU taxonomy: max. 6 l/min - Substantial Contribution (SC) possible

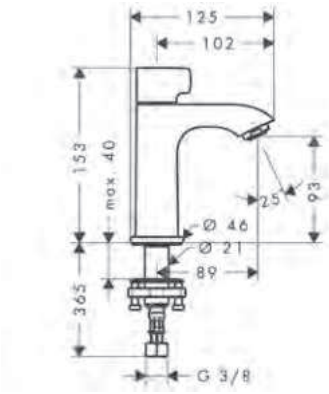

Sustainability

Technologies

Certificates/declarations

Finish	Code no.
Chrome	31166000

Measurements within scale drawings are in mm.
Technical specifications and units of measure are subject to change.

Metris Single lever basin mixers for concealed installation wall-mounted

Features of all variants

- consists of: single lever basin mixer for concealed installation wall-mounted, waste set
- handle variant: lever handle
- spray type: normal spray
- maximum flow rate at 3 bar: 5 l/min
- ceramic cartridge
- temperature limitation adjustable
- non-closing waste set
- material waste set: metal
- connection type: basic set
- connection dimension: DN15
- handle can be positioned on the right or left, depending on the basic set installation
- EU taxonomy: max. 6 l/min - Substantial Contribution (SC) possible

165

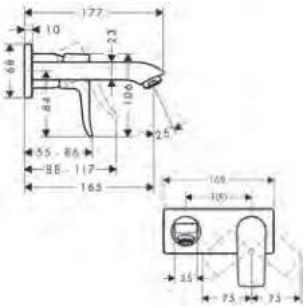

225

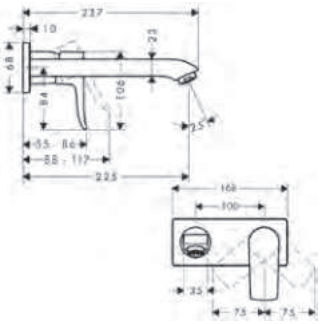

Sustainability

EcoSmart

Technologies

Quick Clean AirPower

Certificates/declarations

EPD

Overview variants

	Projection (mm)	Finish	Code no.
	165	Chrome	31085000
	225	Chrome	31086000

Required parts:

		Code no.
	Basic set for single lever basin mixer for concealed installation wall-mounted	13622180

Metris Single lever basin mixer for concealed installation wall-mounted LowFlow 3,5 l/min with spout 16,5 cm

Features

- consists of: single lever basin mixer for concealed installation wall-mounted, waste set
- projection: 165 mm
- handle variant: lever handle
- spray type: normal spray
- maximum flow rate at 3 bar: 3,5 l/min
- ceramic cartridge
- temperature limitation adjustable
- suitable for continuous flow water heaters
- non-closing waste set
- material waste set: metal
- connection type: basic set
- connection dimension: DN15
- handle can be positioned on the right or left, depending on the basic set installation
- EU taxonomy: max. 6 l/min - Substantial Contribution (SC) possible

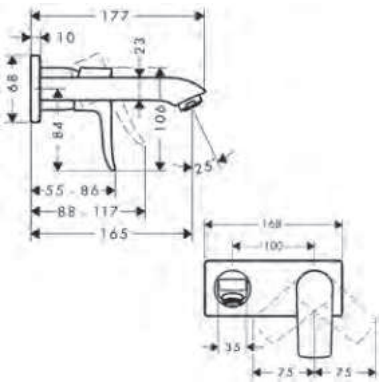

Sustainability

EcoSmart

Technologies

Quick Clean AirPower

Finish	Code no.
Chrome	31251000

Required parts:

		Code no.
	Basic set for single lever basin mixer for concealed installation wall-mounted	13622180

Measurements within scale drawings are in mm.
Technical specifications and units of measure are subject to change.

Metris Single lever bidet mixer with pop-up waste set

Features

- consists of: single lever bidet mixer, waste set
- projection: 123 mm
- spout height: 112 mm
- ball-pivot joint
- spray type: laminar spray
- maximum flow rate at 3 bar: 7,5 l/min
- ceramic cartridge
- temperature limitation adjustable
- suitable for continous flow water heaters
- pop-up waste set G 1¼
- material waste set: metal
- connection type: G ⅜ hose connections
- connection dimension: DN15

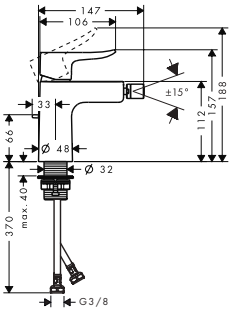

Certificates/declarations

Finish	Code no.
Chrome	31280000

Metris Single lever bath mixer floor-standing

Features

- consists of: single lever bath mixer floor standing, baton hand shower, shower hose, shower holder
- 2 functions
- projection: 209 mm
- spray type mixer: normal spray
- spray type hand shower: RainAir
- maximum flow rate at 3 bar: 19 l/min
- flow rate for bath spout at 3 bar: 19 l/min
- flow rate of hand shower at 3 bar: 14 l/min
- ceramic cartridge
- temperature limitation adjustable
- diverter with automatic resetting
- non-return valve
- connection dimension: DN15
- connection type: basic set
- deck mounted
- min. operating pressure: 1 bar
- max. operating pressure: 10 bar

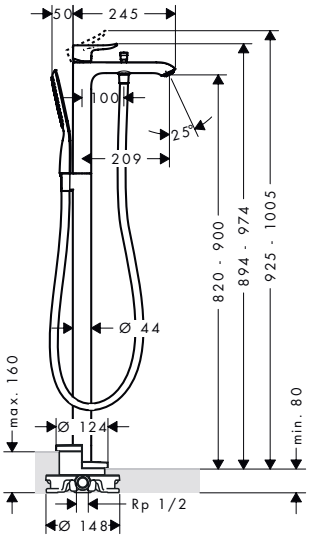

Technologies

Spray types

Certificates/declarations

Finish	Code no.
Chrome	31471000

Required parts:	Code no.
Basic set for mixers floor-standing	10452180

Optional parts:	Code no.
Sealing foil for basic set bath mixer floor-standing	96441000

Measurements within scale drawings are in mm.
Technical specifications and units of measure are subject to change.

Metris Single lever bath mixer for exposed installation

Features

- 2 functions
- projection: 181 mm
- centre distance: 150 ± 12 mm
- spray type mixer: normal spray
- maximum flow rate at 3 bar: 21 l/min
- flow rate for bath spout at 3 bar: 21 l/min
- flow rate of hand shower at 3 bar: 8 l/min
- ceramic cartridge
- temperature limitation adjustable
- diverter with automatic resetting
- protected against backflow, according to DIN EN 1717
- with silencer
- suitable for continous flow water heaters
- connection dimension: DN15
- connection type: S-connections
- wall-mounted
- min. operating pressure: 1 bar
- max. operating pressure: 10 bar

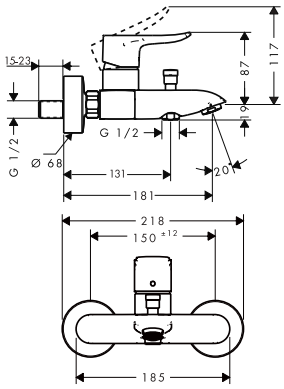

Technologies

Quick Clean, AirPower

Certificates/declarations

EPD

Finish	Code no.
Chrome	31480000

Metris Single lever bath mixers for concealed installation for iBox universal

Features of all variants

- ceramic cartridge
- temperature limitation adjustable
- diverter with automatic resetting
- with silencer
- connection type: basic set
- wall-mounted

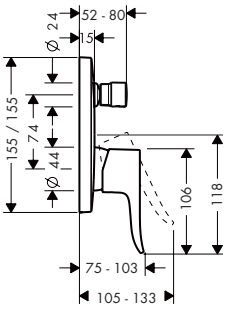

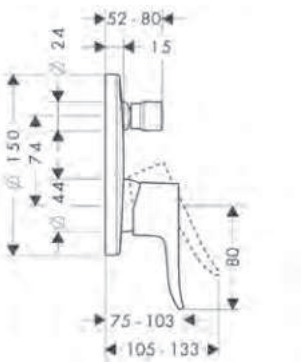

Certificates/declarations

EPD

Overview variants

Shape	Security combination EN 1717	Max. flow rate at 3 bar (l/min)	Finish	Code no.
softcube	–	29	Chrome	31454000
softcube	■	25.6	Chrome	31451000
round	–	29	Chrome	31493000
round	■	25	Chrome	31487000

Required parts (choose one):			Code no.
Option 1		iBox universal 2 Basic set	01500180
	+	Adapter plate for iBox universal 2	13588000
Option 2		iBox universal Basic set	01800180

Measurements within scale drawings are in mm.
Technical specifications and units of measure are subject to change.

Metris Bath spout

Features

- 1 function
- projection: 165 mm
- wall-mounted
- maximum flow rate at 3 bar: 20 l/min
- connection dimension: DN20
- spray type: normal spray

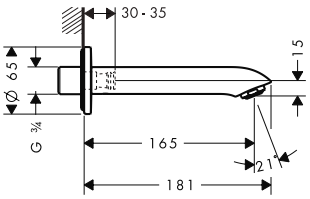

Technologies

Finish	Code no.
Chrome	31494000

Optional parts:	Code no.
Socket for G1/2 connection	95626000

Metris 3-hole rim mounted single lever bath mixer

Features

- consists of: 3-hole rim mounted single lever bath mixer, baton hand shower, shower holder
- 2 functions
- projection: 220 mm
- spray type hand shower: RainAir
- maximum pull-out length of hand shower: 1.10 m
- maximum flow rate at 3 bar: 19 l/min
- flow rate for bath spout at 3 bar: 19 l/min
- flow rate of hand shower at 3 bar: 15 l/min
- ceramic cartridge
- temperature limitation adjustable
- connection dimension: DN15
- connection type: basic set
- installation on bath rim
- min. operating pressure: 1 bar
- max. operating pressure: 10 bar

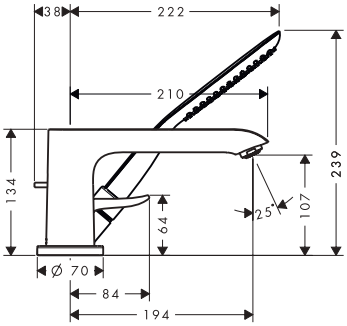

Technologies

Spray types

Finish	Code no.
Chrome	31190000

Required parts:	Code no.
Basic set for 3-hole rim mounted single lever bath mixer	13437180

Measurements within scale drawings are in mm.
Technical specifications and units of measure are subject to change.

Metris 4-hole rim mounted bath mixer

Features

- consists of: 4-hole rim mounted bath mixer, shower holder
- 2 functions
- projection: 220 mm
- spray type mixer: normal spray
- spray type hand shower: RainAir
- maximum pull-out length of hand shower: 1.10 m
- maximum flow rate at 3 bar: 25 l/min
- flow rate for bath spout at 3 bar: 25 l/min
- flow rate of hand shower at 3 bar: 23 l/min
- ceramic valves hot/cold 90°
- connection type: basic set
- installation on bath rim
- min. operating pressure: 1 bar
- max. operating pressure: 10 bar

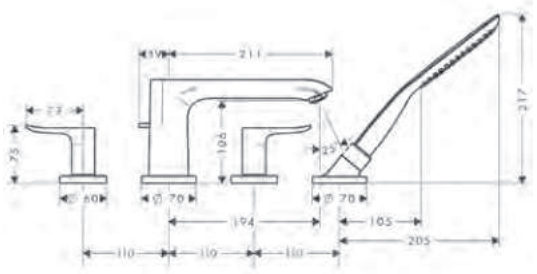

Technologies

Spray types

Finish	Code no.
Chrome	31442000

Required parts:	Code no.
Basic set for 4-hole rim mounted bath mixer	13444180

Metris Single lever shower mixer for exposed installation

Features

- 1 function
- centre distance: 150 ± 12 mm
- maximum flow rate at 3 bar: 31 l/min
- flow rate of hand shower at 3 bar: 16 l/min
- ceramic cartridge
- temperature limitation adjustable
- non-return valve
- with silencer
- hose connection DN15
- connection dimension: DN15
- min. operating pressure: 1 bar
- max. operating pressure: 10 bar
- connection type: S-connections

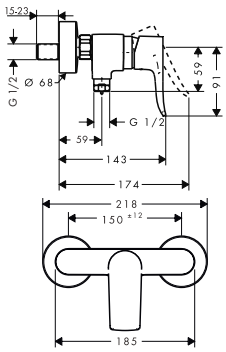

Certificates/declarations

Finish	Code no.
Chrome	31680000

Metris Single lever shower mixers for concealed installation for iBox universal

Features of all variants

- 1 function
- ceramic cartridge
- temperature limitation adjustable
- with silencer
- min. operating pressure: 1 bar
- max. operating pressure: 10 bar
- connection type: basic set

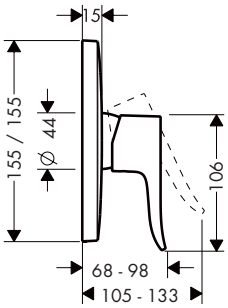

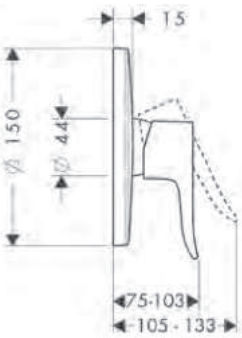

Certificates/declarations

EPD

Overview variants

	Shape	Finish	Code no.
	softcube	Chrome	31456000
	round	Chrome	31685000

Required parts (choose one):			Code no.
Option 1		iBox universal 2 Basic set	01500180
	+	Adapter plate for iBox universal 2	13588000
Option 2		iBox universal Basic set	01800180

Metris Single lever shower mixer HighFlow for concealed installation for iBox universal

Features

- 1 function
- maximum flow rate at 3 bar: 47 l/min
- ceramic cartridge (Highflow)
- temperature limitation adjustable
- connection dimension: DN15
- min. operating pressure: 1 bar
- max. operating pressure: 10 bar
- connection type: basic set

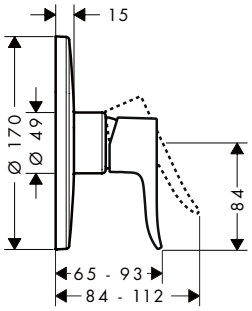

Finish	Code no.
Chrome	31652000

Required parts (choose one):			Code no.
Option 1		iBox universal 2 Basic set	01500180
	+	Adapter plate for iBox universal 2	13588000
Option 2		iBox universal Basic set	01800180

Measurements within scale drawings are in mm.
Technical specifications and units of measure are subject to change.

Finoris

Finoris Single lever basin mixers

Features of all variants

- consists of: single lever basin mixer, waste set
- handle variant: lever handle
- spray type: laminar spray
- maximum flow rate at 3 bar: 5 l/min
- ceramic cartridge
- temperature limitation adjustable
- suitable for continuous flow water heaters
- material waste set: metal
- connection type: G ⅜ hose connections
- connection dimension: DN15
- EU taxonomy: max. 6 l/min - Substantial Contribution (SC) possible

100

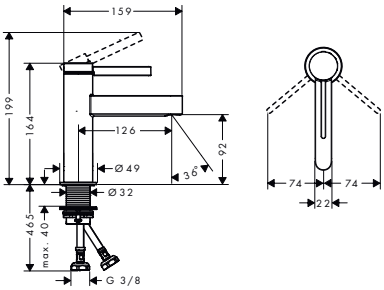

110

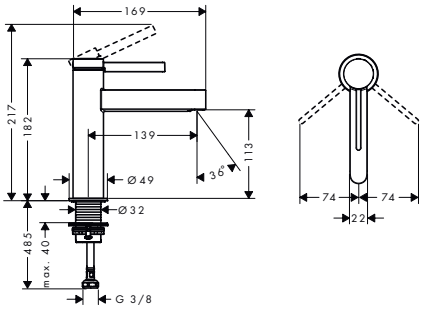

260

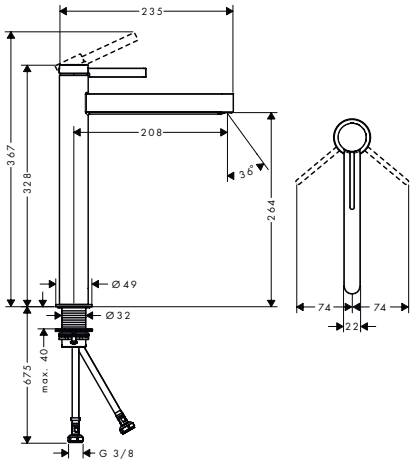

Sustainability

CoolStart EcoSmart

Technologies

Comfort Zone

Overview variants

ComfortZone	Projection (mm)	Spout height (mm)	Waste set	CoolStart	For wash bowls	Finish	Code no.
100	126	92	push-open	–	–	Chrome	76010000
						Matt Black	76010670
						Matt White	76010700
110	139	113	push-open	■	–	Chrome	76024000
						Matt Black	76024670
						Matt White	76024700
110	139	113	push-open	–	–	Chrome	76023000
						Matt Black	76023670
						Matt White	76023700
110	139	113	pop-up	–	–	Chrome	76020000
						Matt Black	76020670
						Matt White	76020700
260	208	264	push-open	–	■	Chrome	76070000
						Matt Black	76070670
						Matt White	76070700

Measurements within scale drawings are in mm.
Technical specifications and units of measure are subject to change.

Finoris Single lever basin mixer 230 with swivel spout and push-open waste set

Features

- consists of: single lever basin mixer, waste set
- ComfortZone: 230
- projection: 178 mm
- spout height: 221 mm
- handle variant: lever handle
- swivel range 120°
- spray type: laminar spray
- maximum flow rate at 3 bar: 5 l/min
- ceramic cartridge
- temperature limitation adjustable
- suitable for continuous flow water heaters
- push-open waste set G 1¼
- material waste set: metal
- connection type: G ⅜ hose connections
- connection dimension: DN15
- EU taxonomy: max. 6 l/min - Substantial Contribution (SC) possible

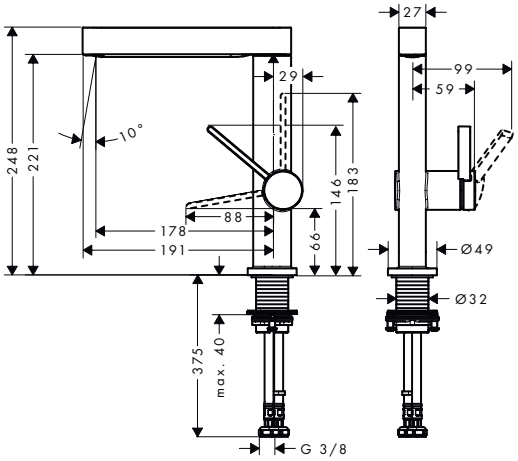

Sustainability

EcoSmart

Technologies

Comfort Zone

Finish	Code no.
Chrome	76060000
Matt Black	76060670
Matt White	76060700

Finoris Single lever basin mixer 230 with pull-out spray, 2jet and push-open waste set

Features

- consists of: single lever basin mixer, waste set
- ComfortZone: 230
- projection: 191 mm
- spout height: 229 mm
- handle variant: lever handle
- spray type: laminar spray
- spray returns through pressing spray diverter and spray returns automatically through handle closing
- extension length: 50 cm
- spray disc surface: graphite
- maximum flow rate at 3 bar: 5 l/min
- ceramic cartridge
- temperature limitation adjustable
- push-open waste set G 1¼
- material waste set: metal
- connection type: G ⅜ hose connections
- connection dimension: DN15
- non-return valve
- EU taxonomy: max. 6 l/min - Substantial Contribution (SC) possible

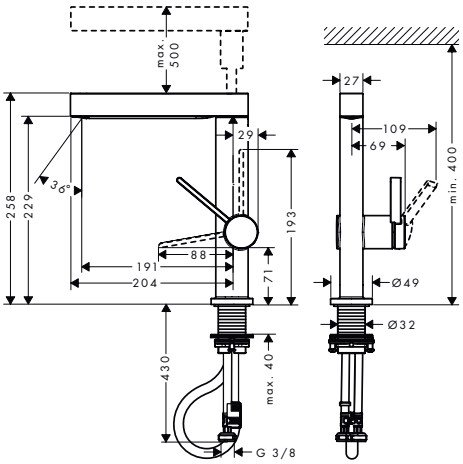

Sustainability

EcoSmart

Technologies

Quick Clean | Comfort Zone | Pull-out Faucet

Finish	Code no.
Chrome	76063000
Matt Black	76063670
Matt White	76063700

Measurements within scale drawings are in mm.
Technical specifications and units of measure are subject to change.

Finoris Pillar tap 100 with lever handle for cold water or pre-adjusted water without waste set

Features

- ComfortZone: 100
- projection: 126 mm
- spout height: 92 mm
- handle variant: lever handle
- spray type: laminar spray
- maximum flow rate at 3 bar: 5 l/min
- ceramic cartridge
- for cold water connection
- connection type: G ⅜ hose connection
- connection dimension: DN15
- EU taxonomy: max. 6 l/min - Substantial Contribution (SC) possible

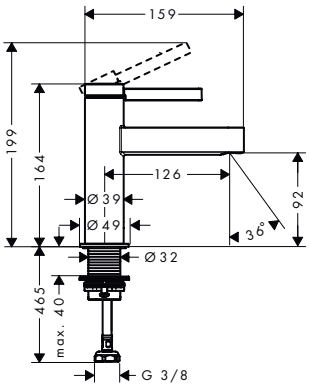

Sustainability

Technologies

Finish	Code no.
Chrome	76013000
Matt Black	76013670
Matt White	76013700

Finoris 3-hole basin mixers

Features of all variants

- consists of: 3-hole basin mixer, waste set
- projection: 169 mm
- handle variant: lever handle
- spray type: laminar spray
- maximum flow rate at 3 bar: 5 l/min
- ceramic valves hot/cold 90°
- suitable for continuous flow water heaters
- push-open waste set G 1¼
- material waste set: metal
- connection type: G ⅜ hose connection
- connection dimension: DN15
- EU taxonomy: max. 6 l/min - Substantial Contribution (SC) possible

110

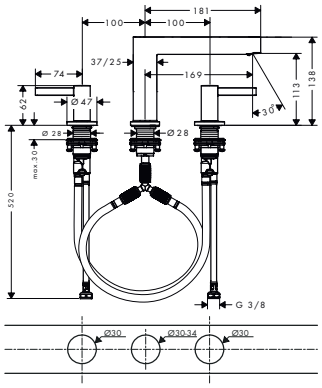

160

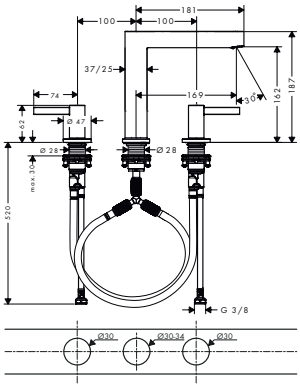

Sustainability

Technologies

Overview variants

ComfortZone	Projection (mm)	Spout height (mm)	Finish	Code no.
110	169	113	Chrome	76033000
			Matt Black	76033670
			Matt White	76033700
160	169	162	Chrome	76034000
			Matt Black	76034670
			Matt White	76034700

Measurements within scale drawings are in mm.
Technical specifications and units of measure are subject to change.

Finoris Single lever basin mixers for concealed installation wall-mounted

Features of all variants

- consists of: single lever basin mixer for concealed installation wall-mounted, waste set
- handle variant: lever handle
- spray type: laminar spray
- maximum flow rate at 3 bar: 5 l/min
- ceramic cartridge
- suitable for continuous flow water heaters
- non-closing waste set
- material waste set: metal
- connection type: basic set
- connection dimension: DN15
- handle can be positioned on the right or left, depending on the basic set installation
- EU taxonomy: max. 6 l/min - Substantial Contribution (SC) possible

168

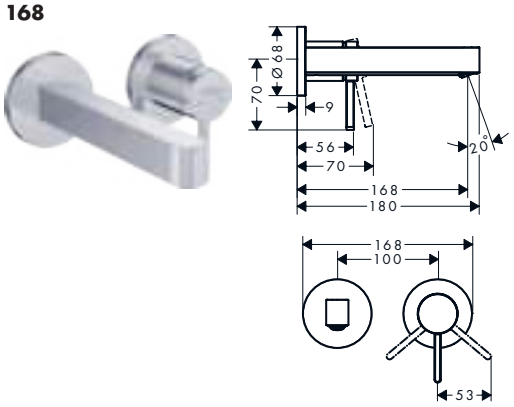

228

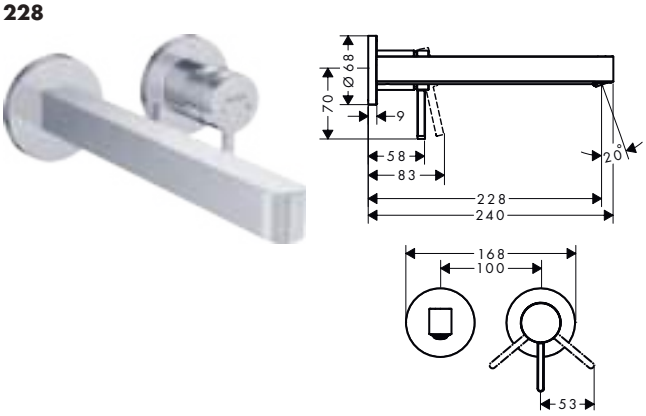

Sustainability

EcoSmart

Overview variants

	Projection (mm)	Finish	Code no.
	168	Chrome	76051000
		Matt Black	76051670
		Matt White	76051700
	228	Chrome	76050000
		Matt Black	76050670
		Matt White	76050700

Required parts:		Code no.
	Basic set for single lever basin mixer for concealed installation wall-mounted	13622180

Finoris Single lever basin mixers with bidette hand shower and shower hose 160 cm

Features of all variants

- consists of: single lever basin mixer, bidette hand shower, shower holder, shower hose, waste set
- handle variant: lever handle
- spray type: laminar spray
- maximum flow rate at 3 bar: 5 l/min
- ceramic cartridge
- temperature limitation adjustable
- suitable for continuous flow water heaters
- push-open waste set G 1¼
- material waste set: metal
- connection type: G ⅜ hose connections
- connection dimension: DN15
- EU taxonomy: max. 6 l/min - Substantial Contribution (SC) possible

110

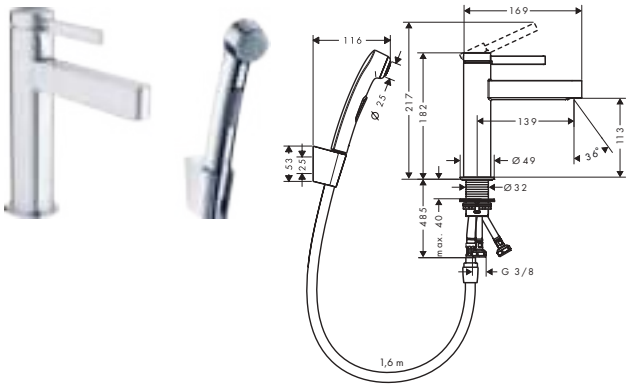

260

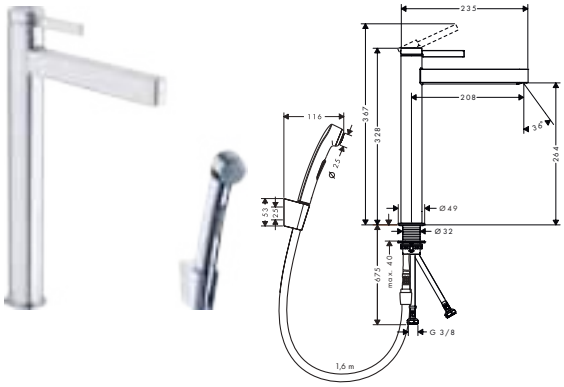

Sustainability

EcoSmart

Technologies

Comfort Zone

For more information about this product, please see the next page.

Finoris Single lever basin mixers with bidette hand shower and shower hose 160 cm

Overview variants

ComfortZone	Projection (mm)	Spout height (mm)	For wash bowls	Finish	Code no.
110	139	113	–	Chrome	76210000
				Matt Black	76210670
260	208	264	■	Chrome	76220000
				Matt Black	76220670

Finoris Single lever bidet mixer with push-open waste set

Features

- consists of: single lever bidet mixer, waste set
- projection: 129 mm
- spout height: 99 mm
- ball-pivot joint
- spray type: laminar spray
- maximum flow rate at 3 bar: 7,5 l/min
- ceramic cartridge
- suitable for continous flow water heaters
- push-open waste set G 1¼
- material waste set: metal
- connection type: G ⅜ hose connections
- connection dimension: DN15

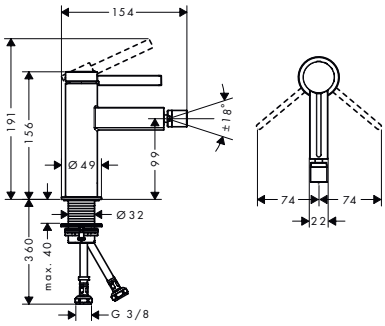

Finish	Code no.
Chrome	76200000
Matt Black	76200670
Matt White	76200700

Finoris Single lever bath mixer floor-standing

Features

- consists of: single lever bath mixer floor standing, baton hand shower, shower hose
- 2 functions
- projection: 210 mm
- spray type mixer: normal spray
- spray type hand shower: Rain, MonoRain
- maximum flow rate at 3 bar: 20,6 l/min
- flow rate for bath spout at 3 bar: 20,6 l/min
- flow rate of hand shower at 3 bar: 13,6 l/min
- ceramic cartridge
- diverter with automatic resetting
- non-return valve
- connection dimension: DN15
- connection type: basic set
- deck mounted
- min. operating pressure: 1 bar
- max. operating pressure: 10 bar

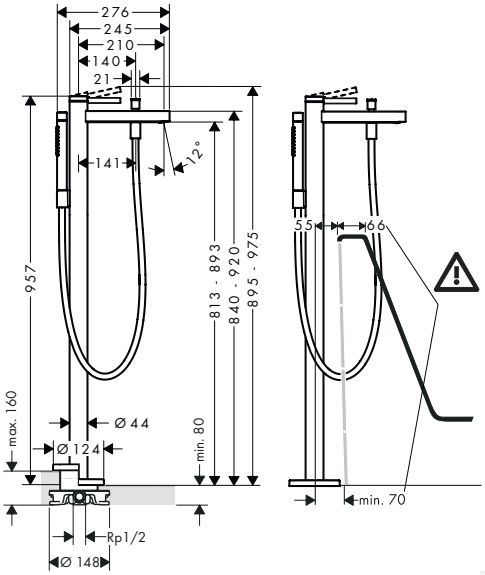

Technologies

AirPower

Spray types

Mono Rain | Rain

Finish	Code no.
Chrome	76445000
Matt Black	76445670
Matt White	76445700

Measurements within scale drawings are in mm.
Technical specifications and units of measure are subject to change.

Finoris Single lever bath mixer floor-standing

Required parts:	Code no.
Basic set for mixers floor-standing	10452180

Optional parts:	Code no.
Sealing foil for basic set bath mixer floor-standing	96441000

Finoris Single lever bath mixer for exposed installation

Features

- 2 functions
- projection: 194 mm
- centre distance: 150 ± 12 mm
- spray type mixer: normal spray
- maximum flow rate at 3 bar: 19 l/min
- flow rate for bath spout at 3 bar: 19 l/min
- flow rate of hand shower at 3 bar: 14,7 l/min
- ceramic cartridge
- pressure diverter Select with automatic resetting
- protected against backflow, according to DIN EN 1717
- with silencer
- suitable for continous flow water heaters
- connection dimension: DN15
- connection type: S-connections
- wall-mounted
- min. operating pressure: 1 bar
- max. operating pressure: 10 bar

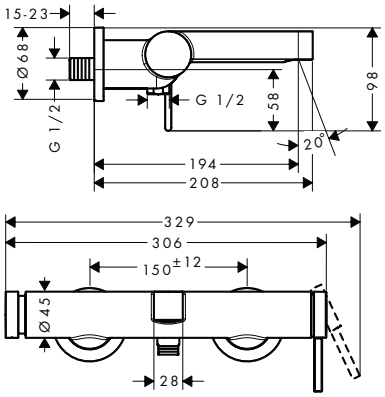

Technologies

AirPower | Select

Finish	Code no.
Chrome	76420000
Matt Black	76420670
Matt White	76420700

Finoris Single lever bath mixers for concealed installation for iBox universal

Features of all variants

- 2 functions
- temperature limitation adjustable
- diverter with automatic resetting
- with silencer
- connection type: basic set
- wall-mounted
- min. operating pressure: 1 bar
- max. operating pressure: 10 bar

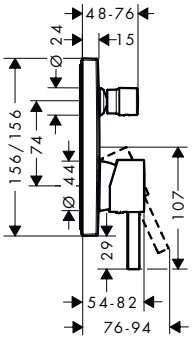

Overview variants

Security combination EN 1717	Max. flow rate at 3 bar (l/min)	Finish	Code no.
–	29	Chrome	76415000
		Matt Black	76415670
		Matt White	76415700

For more information about this product, please see the next page.

Measurements within scale drawings are in mm.
Technical specifications and units of measure are subject to change.

Finoris Single lever bath mixers for concealed installation for iBox universal

Overview variants

Security combination EN 1717	Max. flow rate at 3 bar (l/min)	Finish	Code no.
■		Chrome	76416000
		Matt Black	76416670
		Matt White	76416700

Required parts (choose one):			Code no.
Option 1		iBox universal 2 Basic set	01500180
+		Adapter plate for iBox universal 2	13588000
Option 2		iBox universal Basic set	01800180

Finoris Bath spout

Features

- 1 function
- connection type: G ½
- with escutcheon
- projection: 174 mm
- wall-mounted
- maximum flow rate at 3 bar: 20,3 l/min
- spray type: normal spray

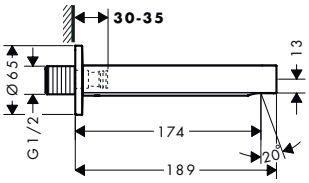

Technologies

AirPower

Finish	Code no.
Chrome	76410000
Matt Black	76410670
Matt White	76410700

Optional parts:		Code no.
	Connecting thread G ¾	92504000

Measurements within scale drawings are in mm.
Technical specifications and units of measure are subject to change.

Finoris 4-hole rim mounted bath mixer with sBox

Features

- consists of: 4-hole rim mounted bath mixer, hand shower, shower holder, hose box
- 2 functions
- projection: 152 mm
- spray type mixer: normal spray
- spray type hand shower: PowderRain
- maximum pull-out length of hand shower: 1,45 m
- maximum flow rate at 3 bar: 23,5 l/min
- flow rate for bath spout at 3 bar: 23,5 l/min
- flow rate of hand shower at 3 bar: 10,2 l/min
- ceramic valves hot/cold 90°
- non-return valve
- connection dimension: DN15
- connection type: basic set
- installation on bath rim
- min. operating pressure: 1 bar
- max. operating pressure: 10 bar

Technologies

AirPower

Spray types

Powder Rain

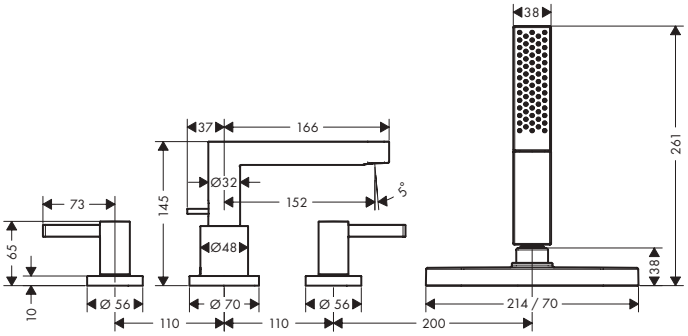

Finish	Code no.
Chrome	76444000
Matt Black	76444670
Matt White	76444700

Required parts:	Code no.
Basic set for 4-hole rim mounted bath mixer	13440180

Finoris Single lever shower mixer for exposed installation

Features

- 1 function
- centre distance: 150 ± 12 mm
- maximum flow rate at 3 bar: 12,1 l/min
- flow rate of hand shower at 3 bar: 12,1 l/min
- ceramic cartridge
- non-return valve
- with silencer
- suitable for continous flow water heaters
- hose connection DN15
- connection dimension: DN15
- min. operating pressure: 1 bar
- max. operating pressure: 10 bar
- connection type: S-connections

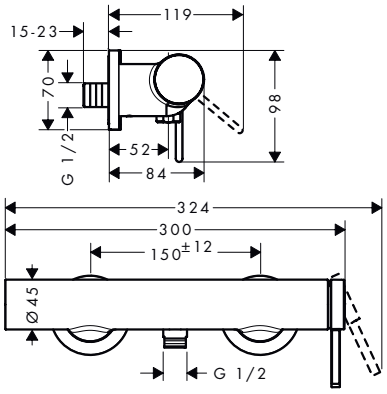

Finish	Code no.
Chrome	76620000
Matt Black	76620670
Matt White	76620700

Measurements within scale drawings are in mm.
Technical specifications and units of measure are subject to change.

Finoris Single lever shower mixer for concealed installation for iBox universal

Features

- 1 function
- maximum flow rate at 3 bar: 29,3 l/min
- ceramic cartridge
- temperature limitation adjustable
- with silencer
- suitable for continous flow water heaters
- min. operating pressure: 1 bar
- max. operating pressure: 10 bar
- connection type: basic set

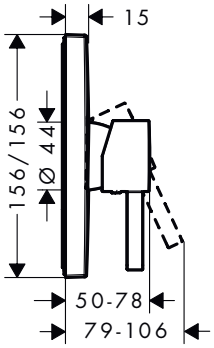

Finish	Code no.
Chrome	76615000
Matt Black	76615670
Matt White	76615700

Required parts (choose one):			Code no.
Option 1		iBox universal 2 Basic set	01500180
	+	Adapter plate for iBox universal 2	13588000
Option 2		iBox universal Basic set	01800180

Measurements within scale drawings are in mm.
Technical specifications and units of measure are subject to change.

Tecturis

Tecturis S Single lever basin mixers Fine CoolStart

Features of all variants

- handle variant: lever handle
- spray type: normal spray
- ceramic cartridge
- suitable for continuous flow water heaters
- connection type: G ⅜ hose connections
- connection dimension: DN15
- cold water in basic handle position
- EU taxonomy: max. 6 l/min - Substantial Contribution (SC) possible

110

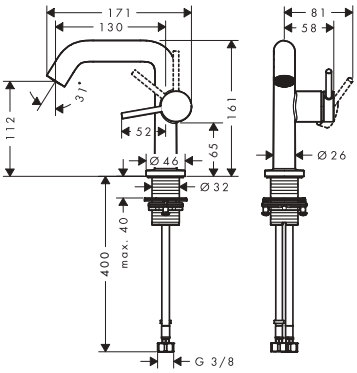

150

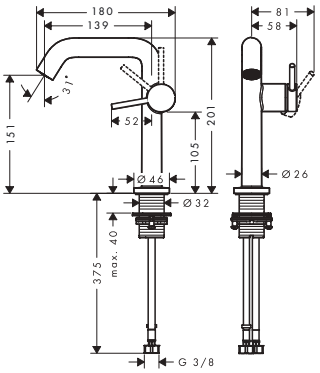

240

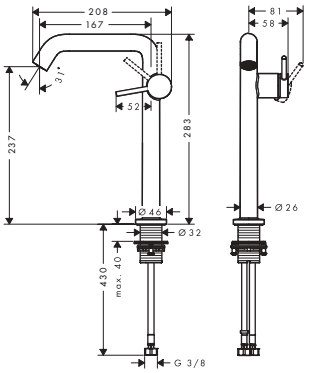

Sustainability

CoolStart | EcoSmart | Eco Smart+

Technologies

AirPower | Comfort Zone

Overview variants

Comfort-Zone	Projection (mm)	Spout height (mm)	Waste set	Material waste set	CoolStart	For wash bowls	Max. flow rate at 3 bar (l/min)	Finish	Code no.
110	130	112	push-open	metal	■	–	4	Chrome	73320000
								Brushed Bronze	73320140
								Matt Black	73320670
								Matt White	73320700
110	130	112	pop-up	metal	■	–	4	Chrome	73323000
								Brushed Bronze	73323140
								Matt Black	73323670
								Matt White	73323700
110	130	112	without	–	■	–	4	Chrome	73321000
								Brushed Bronze	73321140
								Matt Black	73321670
								Matt White	73321700
110	130	112	push-open	metal	■	–	5	Chrome	73322000
								Brushed Bronze	73322140
								Matt Black	73322670
								Matt White	73322700
150	139	151	push-open	metal	■	–	4	Chrome	73340000
								Brushed Bronze	73340140
								Matt Black	73340670
								Matt White	73340700

Measurements within scale drawings are in mm.
Technical specifications and units of measure are subject to change.

Tecturis S Single lever basin mixers Fine CoolStart

Overview variants

Comfort-Zone	Projection (mm)	Spout height (mm)	Waste set	Material waste set	CoolStart	For wash bowls	Max. flow rate at 3 bar (l/min)	Finish	Code no.
150	139	151	without	–	■	–	4	Chrome	73341000
								Brushed Bronze	73341140
								Matt Black	73341670
								Matt White	73341700
150	139	151	push-open	metal	■	–	5	Chrome	73342000
								Brushed Bronze	73342140
								Matt Black	73342670
								Matt White	73342700
240	167	230	push-open	metal	■	■	4	Chrome	73370000
								Brushed Bronze	73370140
								Matt Black	73370670
								Matt White	73370700
240	167	230	without	–	■	■	4	Chrome	73372000
								Brushed Bronze	73372140
								Matt Black	73372670
								Matt White	73372700
240	167	230	push-open	metal	■	■	5	Chrome	73373000
								Brushed Bronze	73373140
								Matt Black	73373670
								Matt White	73373700

Tecturis S Single lever basin mixers Fine CoolStart with swivel spout

Features of all variants

- consists of: single lever basin mixer, waste set
- ComfortZone: 210
- projection: 154 mm
- spout height: 187 mm
- handle variant: lever handle
- swivel range 120°
- spray type: normal spray
- ceramic cartridge
- suitable for continuous flow water heaters
- push-open waste set G 1¼
- material waste set: metal
- connection type: G ⅜ hose connections
- connection dimension: DN15
- cold water in basic handle position
- EU taxonomy: max. 6 l/min - Substantial Contribution (SC) possible

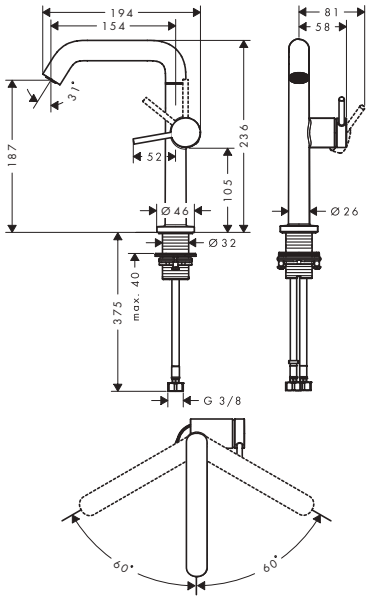

Sustainability

CoolStart | EcoSmart | Eco Smart+

Technologies

AirPower | Comfort Zone

For more information about this product, please see the next page.

Measurements within scale drawings are in mm.
Technical specifications and units of measure are subject to change.

Tecturis S Single lever basin mixers Fine CoolStart with swivel spout

Overview variants

ComfortZone	Projection (mm)	Spout height (mm)	CoolStart	Max. flow rate at 3 bar (l/min)	Finish	Code no.
210	154	187	■	4	Chrome	73360000
					Brushed Bronze	73360140
					Matt Black	73360670
					Matt White	73360700
210	154	187	■	5	Chrome	73364000
					Brushed Bronze	73364140
					Matt Black	73364670
					Matt White	73364700

Tecturis S 2-hole basin mixer 150 CoolStart EcoSmart+ with waste set

Features

- consists of: 2-hole basin mixer, waste set
- ComfortZone: 150
- projection: 139 mm
- spout height: 151 mm
- handle variant: cylinder handle
- spray type: normal spray
- maximum flow rate at 3 bar: 4 l/min
- Select cartridge with temperature control
- comfortable operation turning and pushing movement
- material control element: metal housing, safety glass
- suitable for continuous flow water heaters
- non-closing waste set
- material waste set: metal
- connection type: G ⅜ hose connections
- connection dimension: DN15
- flexible positioning of control element possible
- cold water in basic handle position
- no soiling of the outlet due to water spots
- quick connect hose
- EU taxonomy: max. 6 l/min - Substantial Contribution (SC) possible

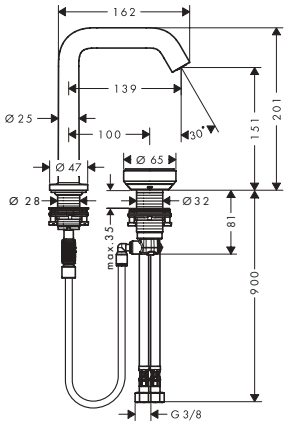

Sustainability

CoolStart | Eco Smart+

Technologies

AirPower | Comfort Zone

Finish	Code no.
Chrome	73353000
Brushed Bronze	73353140
Matt Black	73353670
Matt White	73353700

Measurements within scale drawings are in mm.
Technical specifications and units of measure are subject to change.

Tecturis S 3-hole basin mixer 150 EcoSmart+ with push-open waste set

Features

- consists of: 3-hole basin mixer, waste set
- ComfortZone: 150
- projection: 139 mm
- spout height: 152 mm
- handle variant: lever handle
- spray type: normal spray
- maximum flow rate at 3 bar: 4 l/min
- ceramic cartridge
- suitable for continuous flow water heaters
- push-open waste set G 1¼
- material waste set: metal
- connection type: G ⅜ hose connections
- connection dimension: DN15
- EU taxonomy: max. 6 l/min - Substantial Contribution (SC) possible

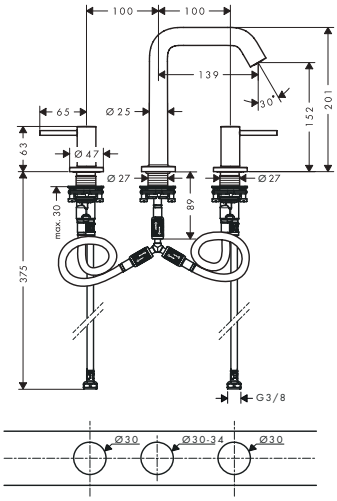

Sustainability

Eco Smart+

Technologies

AirPower | Comfort Zone

Finish	Code no.
Chrome	73330000
Brushed Bronze	73330140
Matt Black	73330670
Matt White	73330700

Tecturis S Single lever basin mixers

Features of all variants

- handle variant: lever handle
- spray type: normal spray
- ceramic cartridge
- temperature limitation adjustable
- suitable for continuous flow water heaters
- connection type: G ⅜ hose connections
- connection dimension: DN15
- EU taxonomy: max. 6 l/min - Substantial Contribution (SC) possible

80

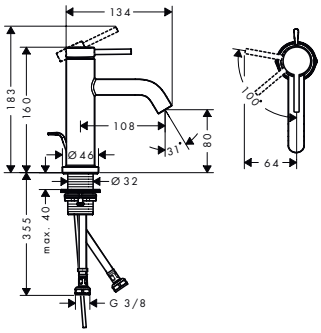

110

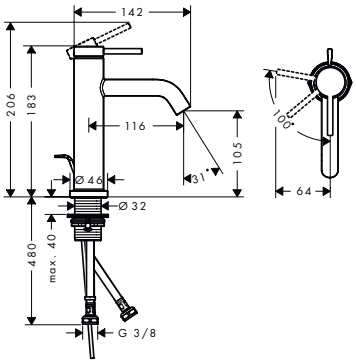

Sustainability

CoolStart | EcoSmart | Eco Smart+

Technologies

AirPower | Comfort Zone

Overview variants

ComfortZone	Projection (mm)	Spout height (mm)	Waste set	Material waste set	CoolStart	Max. flow rate at 3 bar (l/min)	Finish	Code no.
80	108	80	pop-up	metal	■	4	Chrome	73302000
							Brushed Bronze	73302140
							Matt Black	73302670
							Matt White	73302700
80	108	80	without	–	■	4	Chrome	73301000
							Brushed Bronze	73301140
							Matt Black	73301670
							Matt White	73301700

For more information about this product, please see the next page.

Measurements within scale drawings are in mm.
Technical specifications and units of measure are subject to change.

Tecturis S Single lever basin mixers

Overview variants

ComfortZone	Projection (mm)	Spout height (mm)	Waste set	Material waste set	CoolStart	Max. flow rate at 3 bar (l/min)	Finish	Code no.
80	108	80	pop-up	metal	■	5	Chrome	73305000
							Brushed Bronze	73305140
							Matt Black	73305670
							Matt White	73305700
110		105	pop-up	metal	■	4	Chrome	73314000
							Brushed Bronze	73314140
							Matt Black	73314670
							Matt White	73314700
110		105	without	–	■	4	Chrome	73312000
							Brushed Bronze	73312140
							Matt Black	73312670
							Matt White	73312700
110	116	105	pop-up	metal	–	4	Chrome	73310000
							Brushed Bronze	73310140
							Matt Black	73310670
							Matt White	73310700
110		105	without	–	–	4	Chrome	73311000
							Brushed Bronze	73311140
							Matt Black	73311670
							Matt White	73311700
110		105	pop-up	metal	■	5	Chrome	73318000
							Brushed Bronze	73318140
							Matt Black	73318670
							Matt White	73318700
110		105	without	–	■	5	Chrome	73317000
							Brushed Bronze	73317140
							Matt Black	73317670
							Matt White	73317700

Measurements within scale drawings are in mm.
Technical specifications and units of measure are subject to change.

Tecturis S Pillar tap 80 EcoSmart+ with lever handle for cold water or pre-adjusted water without waste set

Features

- ComfortZone: 80
- projection: 108 mm
- spout height: 80 mm
- handle variant: lever handle
- spray type: normal spray
- maximum flow rate at 3 bar: 4 l/min
- ceramic cartridge
- for cold water connection
- connection type: G ⅜ hose connections
- connection dimension: DN15
- EU taxonomy: max. 6 l/min - Substantial Contribution (SC) possible

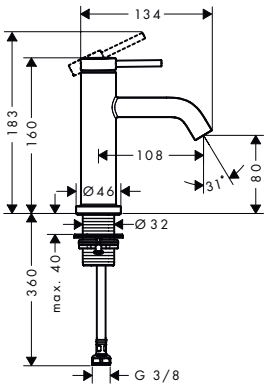

Sustainability

Technologies

Finish	Code no.
Chrome	73313000
Brushed Bronze	73313140
Matt Black	73313670
Matt White	73313700

Tecturis S Single lever basin mixers for concealed installation wall-mounted

Features of all variants

- consists of: single lever basin mixer for concealed installation wall-mounted, waste set
- handle variant: lever handle
- spray type: normal spray
- maximum flow rate at 3 bar: 4 l/min
- ceramic cartridge
- temperature limitation adjustable
- suitable for continuous flow water heaters
- non-closing waste set
- material waste set: metal
- connection type: basic set
- connection dimension: DN15
- handle can be positioned on the right or left, depending on the basic set installation
- EU taxonomy: max. 6 l/min - Substantial Contribution (SC) possible

165

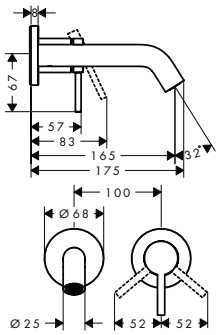

225

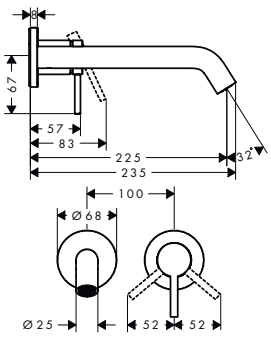

Sustainability

Technologies

Overview variants

	Projection (mm)	Finish	Code no.
	165	Chrome	73350000
		Brushed Bronze	73350140
		Matt Black	73350670
		Matt White	73350700
	225	Chrome	73351000
		Brushed Bronze	73351140
		Matt Black	73351670
		Matt White	73351700

Required parts:		Code no.
	Basic set for single lever basin mixer for concealed installation wall-mounted	13622180

Measurements within scale drawings are in mm.
Technical specifications and units of measure are subject to change.

Tecturis S Single lever basin mixer 110 with bidette hand shower and shower hose 160 cm

Features

- consists of: single lever basin mixer, bidette hand shower, shower holder, shower hose
- ComfortZone: 110
- projection: 116 mm
- spout height: 105 mm
- handle variant: lever handle
- spray type: normal spray
- spray type Bidette: shower spray
- maximum flow rate at 3 bar: 5 l/min
- ceramic cartridge
- temperature limitation adjustable
- suitable for continuous flow water heaters
- push-open waste set G 1¼
- material waste set: metal
- connection type: G ⅜ hose connections
- connection dimension: DN15
- EU taxonomy: max. 6 l/min - Substantial Contribution (SC) possible

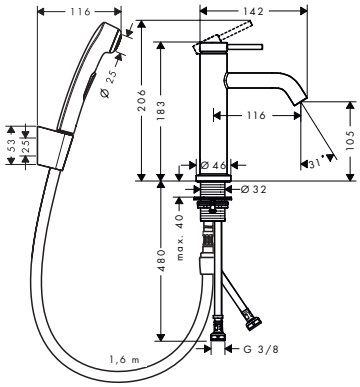

Sustainability

Technologies

Finish	Code no.
Chrome	73211000
Matt Black	73211670

Tecturis S Single lever bidet mixer with pop-up waste set

Features

- consists of: single lever bidet mixer, waste set
- projection: 148 mm
- spout height: 100 mm
- spray type: laminar spray
- maximum flow rate at 3 bar: 5 l/min
- ceramic cartridge
- temperature limitation adjustable
- suitable for continous flow water heaters
- pop-up waste set G 1¼
- material waste set: metal
- connection type: G ⅜ hose connections
- connection dimension: DN15
- EU taxonomy: max. 6 l/min - Substantial Contribution (SC) possible

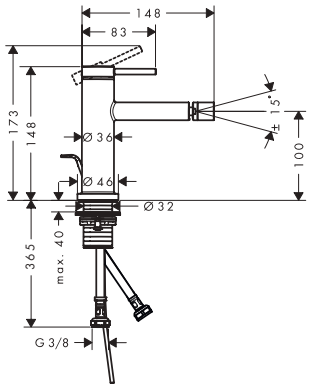

Sustainability

Finish	Code no.
Chrome	73201000
Brushed Bronze	73201140
Matt Black	73201670
Matt White	73201700

Measurements within scale drawings are in mm.
Technical specifications and units of measure are subject to change.

Tecturis S Single lever bath mixer floor-standing

Features

- consists of: single lever bath mixer floor standing, baton hand shower, shower hose, shower holder
- 2 functions
- projection: 194 mm
- spray type mixer: normal spray
- spray type hand shower: Rain, RainAir
- maximum flow rate at 3 bar: 21 l/min
- flow rate for bath spout at 3 bar: 21 l/min
- flow rate of hand shower at 3 bar: 14 l/min
- ceramic cartridge
- pressure diverter Select with automatic resetting
- connection dimension: DN15
- connection type: basic set
- deck mounted
- min. operating pressure: 1 bar
- max. operating pressure: 10 bar

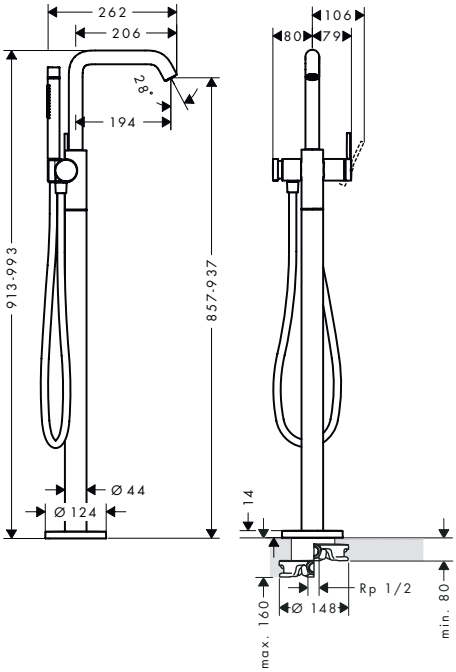

Technologies

Spray types

Finish	Code no.
Chrome	73440000
Brushed Bronze	73440140
Matt Black	73440670
Matt White	73440700

Required parts:	Code no.
Basic set for mixers floor-standing	10452180

Optional parts:	Code no.
Sealing foil for basic set bath mixer floor-standing	96441000

Measurements within scale drawings are in mm.
Technical specifications and units of measure are subject to change.

Tecturis S Single lever bath mixer for exposed installation

Features

- 2 functions
- projection: 209 mm
- centre distance: 150 ± 12 mm
- spray type mixer: normal spray
- flow rate for bath spout at 3 bar: 19 l/min
- flow rate of hand shower at 3 bar: 14,7 l/min
- ceramic cartridge
- temperature limitation adjustable
- pressure diverter Select with automatic resetting
- protected against backflow, according to DIN EN 1717
- with silencer
- suitable for continous flow water heaters
- connection dimension: DN15
- connection type: S-connections
- wall-mounted
- min. operating pressure: 1 bar
- max. operating pressure: 10 bar

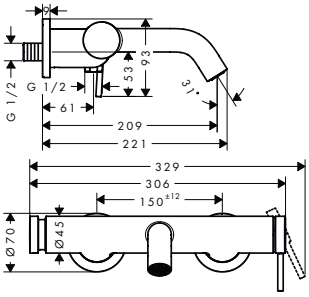

Technologies

Finish	Code no.
Chrome	73422000
Brushed Bronze	73422140
Matt Black	73422670
Matt White	73422700

DuoTurn S Mixer for concealed installation for 2 functions

Features

- 2 functions
- volume control and diverter for 2 functions
- maximum flow rate at 3 bar: 29,5 l/min
- flow rate upper outlet: 29,5 l/min
- flow rate lower outlet: 29,5 l/min
- ceramic cartridge for temperature control, shut-off/ diverter valve
- easy installation due to pre-assembled function block
- handles always at the same height regardless of the installation depth of the basic set
- escutcheon can be aligned by +/- 3°
- material escutcheon: plastic
- material handles: metal
- min. operating pressure: 1 bar
- max. operating pressure: 10 bar
- mixer is delivered with buttons Rain small, Rain large, hand sower, Waterfall, bath tub
- connection type: basic set iBox universal 2 (# 01500180)

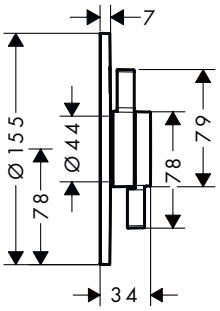

Sustainability

Finish	Code no.
Chrome	75418000
Brushed Bronze	75418140
Matt Black	75418670
Matt White	75418700

Required parts:	Code no.
iBox universal 2 Basic set	01500180

Optional parts:	Code no.
Security combination according to EN 1717	13077000

Measurements within scale drawings are in mm.
Technical specifications and units of measure are subject to change.

Tecturis S Bath spout

Features

- 1 function
- connection type: G ½
- with escutcheon
- projection: 198 mm
- wall-mounted
- maximum flow rate at 3 bar: 22,5 l/min
- connection dimension: DN15
- spray type: normal spray

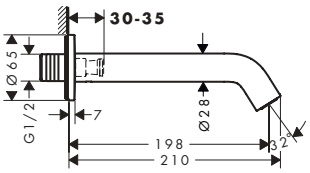

Technologies

Finish	Code no.
Chrome	73411000
Brushed Bronze	73411140
Matt Black	73411670
Matt White	73411700

Optional parts:	Code no.
Socket for G1/2 connection	95626000

Tecturis S 3-hole rim mounted single lever bath mixer with sBox

Features

- consists of: 3-hole rim mounted single lever bath mixer, hand shower, shower hose, shower holder, hose box
- 2 functions
- projection: 194 mm
- flow rate upper outlet: 9 l/min
- flow rate lower outlet: 20 l/min
- spray type mixer: normal spray
- spray type hand shower: Rain, MonoRain
- sBox for quiet, smooth and protected hose guidance
- maximum flow rate at 3 bar: 20 l/min
- ceramic cartridge
- diverter with automatic resetting
- non-return valve
- protected against backflow, according to DIN EN 1717
- connection dimension: DN15
- connection type: basic set
- installation on bath rim
- min. operating pressure: 1 bar
- max. operating pressure: 10 bar

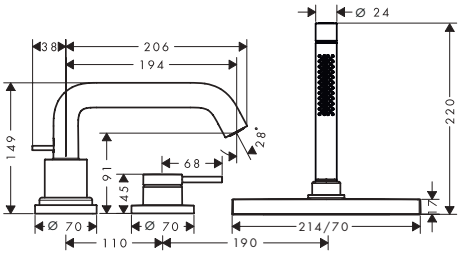

Technologies

Spray types

Finish	Code no.
Chrome	73447000
Brushed Bronze	73447140
Matt Black	73447670
Matt White	73447700

Required parts:	Code no.
Basic set for 3-hole rim mounted single lever bath mixer	13481180

Tecturis S Single lever shower mixer for exposed installation

Features

- 1 function
- centre distance: 150 ± 12 mm
- maximum flow rate at 3 bar: 24 l/min
- flow rate of hand shower at 3 bar: 12,3 l/min
- ceramic cartridge
- temperature limitation adjustable
- non-return valve
- with silencer
- hose connection DN15
- connection dimension: DN15
- min. operating pressure: 1 bar
- max. operating pressure: 10 bar
- connection type: S-connections

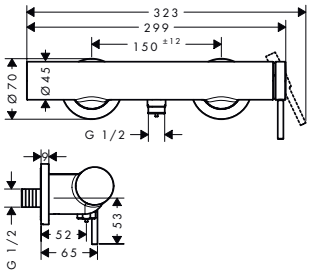

Finish	Code no.
Chrome	73622000
Brushed Bronze	73622140
Matt Black	73622670
Matt White	73622700

DuoTurn S Mixer for concealed installation for 1 function

Features

- 1 function
- volume control for 1 function
- maximum flow rate at 3 bar: 29,5 l/min
- ceramic cartridge for temperature control, 1/2" ceramic shut-off valve
- flat escutcheon for more space in the shower
- easy installation due to pre-assembled function block
- handles always at the same height regardless of the installation depth of the basic set
- escutcheon can be aligned by +/- 3°
- material escutcheon: plastic
- material handles: metal
- min. operating pressure: 1 bar
- max. operating pressure: 10 bar
- mixer is delivered with button hand shower
- connection type: basic set iBox universal 2 (# 01500180)

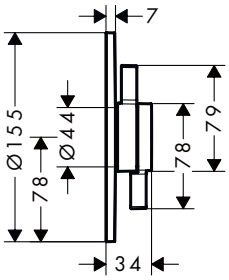

Sustainability

Water Flow Control

Finish	Code no.
Chrome	75618000
Brushed Bronze	75618140
Matt Black	75618670
Matt White	75618700

Required parts:	Code no.
iBox universal 2 Basic set	01500180

Measurements within scale drawings are in mm.
Technical specifications and units of measure are subject to change.

Tecturis E Single lever basin mixers Fine CoolStart

Features of all variants

- handle variant: lever handle
- spray type: WaterfallStream
- ceramic cartridge
- suitable for continuous flow water heaters
- connection type: G ⅜ hose connections
- connection dimension: DN15
- cold water in basic handle position
- EU taxonomy: max. 6 l/min - Substantial Contribution (SC) possible

110

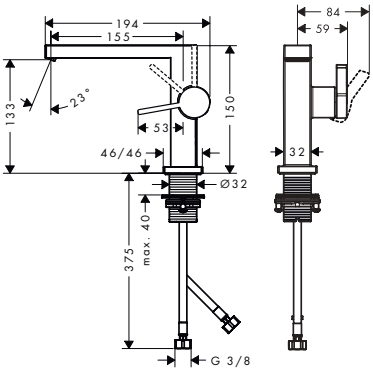

150

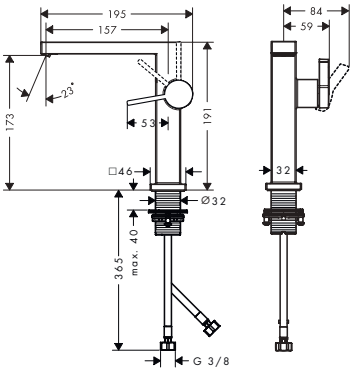

240

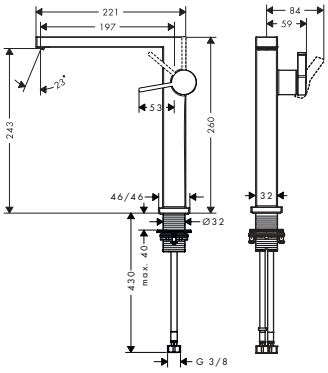

Sustainability

CoolStart · EcoSmart · Eco Smart+

Technologies

AirPower · Comfort Zone

Overview variants

Comfort-Zone	Projection (mm)	Spout height (mm)	Waste set	Material waste set	CoolStart	For wash bowls	Max. flow rate at 3 bar (l/min)	Finish	Code no.
110	155	133	push-open	metal	■	–	4	Chrome	73020000
								Brushed Bronze	73020140
								Matt Black	73020670
								Matt White	73020700
110	155	133	pop-up	metal	■	–	4	Chrome	73023000
								Brushed Bronze	73023140
								Matt Black	73023670
								Matt White	73023700
110	155	133	without	–	■	–	4	Chrome	73021000
								Brushed Bronze	73021140
								Matt Black	73021670
								Matt White	73021700
110	155	133	push-open	metal	■	–	5	Chrome	73024000
								Brushed Bronze	73024140
								Matt Black	73024670
								Matt White	73024700
150	157	173	push-open	metal	■	–	4	Chrome	73040000
								Brushed Bronze	73040140
								Matt Black	73040670
								Matt White	73040700

For more information about this product, please see the next page.

Measurements within scale drawings are in mm.
Technical specifications and units of measure are subject to change.

Tecturis E Single lever basin mixers Fine CoolStart

Overview variants

Comfort-Zone	Projection (mm)	Spout height (mm)	Waste set	Material waste set	CoolStart	For wash bowls	Max. flow rate at 3 bar (l/min)	Finish	Code no.
150	157	173	without	–	■	–	4	Chrome	73041000
								Brushed Bronze	73041140
								Matt Black	73041670
								Matt White	73041700
150	157	173	push-open	metal	■	–	5	Chrome	73042000
								Brushed Bronze	73042140
								Matt Black	73042670
								Matt White	73042700
240	197	243	push-open	metal	■	■	4	Chrome	73070000
								Brushed Bronze	73070140
								Matt Black	73070670
								Matt White	73070700
240	197	243	without	–	■	■	4	Chrome	73072000
								Brushed Bronze	73072140
								Matt Black	73072670
								Matt White	73072700
240	197	243	push-open	metal	■	■	5	Chrome	73073000
								Brushed Bronze	73073140
								Matt Black	73073670
								Matt White	73073700

Tecturis E Single lever basin mixers with swivel spout

Features of all variants

- consists of: single lever basin mixer, waste set
- ComfortZone: 210
- projection: 157 mm
- spout height: 211 mm
- handle variant: lever handle
- swivel range 120°
- spray type: WaterfallStream
- ceramic cartridge
- suitable for continuous flow water heaters
- push-open waste set G 1¼
- material waste set: metal
- connection type: G ⅜ hose connections
- connection dimension: DN15
- cold water in basic handle position
- EU taxonomy: max. 6 l/min - Substantial Contribution (SC) possible

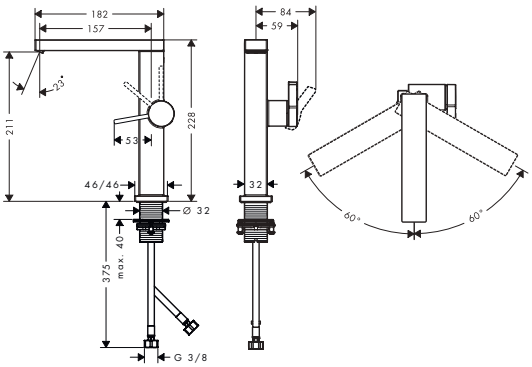

Sustainability

CoolStart · EcoSmart · Eco Smart+

Technologies

AirPower · Comfort Zone

Overview variants

ComfortZone	Projection (mm)	Spout height (mm)	CoolStart	Max. flow rate at 3 bar (l/min)	Finish	Code no.
210	157	211	■	4	Chrome	73060000
					Brushed Bronze	73060140
					Matt Black	73060670
					Matt White	73060700

Measurements within scale drawings are in mm.
Technical specifications and units of measure are subject to change.

Tecturis E Single lever basin mixers with swivel spout

Overview variants

ComfortZone	Projection (mm)	Spout height (mm)	CoolStart	Max. flow rate at 3 bar (l/min)	Finish	Code no.
210	157	211	■	5	Chrome	73063000
					Brushed Bronze	73063140
					Matt Black	73063670
					Matt White	73063700

Tecturis E 2-hole basin mixer 150 CoolStart EcoSmart+ with waste set

Features

- consists of: 2-hole basin mixer, waste set
- ComfortZone: 150
- projection: 158 mm
- spout height: 173 mm
- handle variant: cylinder handle
- spray type: WaterfallStream
- maximum flow rate at 3 bar: 4 l/min
- Select cartridge with temperature control
- comfortable operation turning and pushing movement
- material control element: metal housing, safety glass
- suitable for continuous flow water heaters
- non-closing waste set
- material waste set: metal
- connection type: G ⅜ hose connections
- connection dimension: DN15
- flexible positioning of control element possible
- cold water in basic handle position
- no soiling of the outlet due to water spots
- quick connect hose
- EU taxonomy: max. 6 l/min - Substantial Contribution (SC) possible

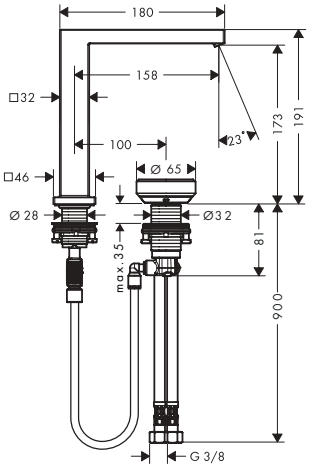

Sustainability

Technologies

Finish	Code no.
Chrome	73053000
Brushed Bronze	73053140
Matt Black	73053670
Matt White	73053700

Tecturis E 3-hole basin mixer 150 EcoSmart+ with push-open waste set

Features

- consists of: 3-hole basin mixer, waste set
- ComfortZone: 150
- projection: 158 mm
- spout height: 173 mm
- handle variant: lever handle
- spray type: WaterfallStream
- maximum flow rate at 3 bar: 4 l/min
- ceramic cartridge
- suitable for continuous flow water heaters
- push-open waste set G 1¼
- material waste set: metal
- connection type: G ⅜ hose connections
- connection dimension: DN15
- EU taxonomy: max. 6 l/min - Substantial Contribution (SC) possible

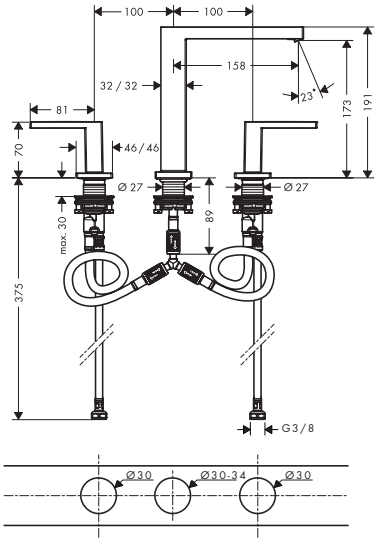

Sustainability

Technologies

Finish	Code no.
Chrome	73030000
Brushed Bronze	73030140
Matt Black	73030670
Matt White	73030700

Tecturis E Single lever basin mixers

Features of all variants

- handle variant: lever handle
- spray type: WaterfallStream
- ceramic cartridge
- temperature limitation adjustable
- suitable for continuous flow water heaters
- connection type: G ⅜ hose connections
- connection dimension: DN15
- EU taxonomy: max. 6 l/min - Substantial Contribution (SC) possible

80

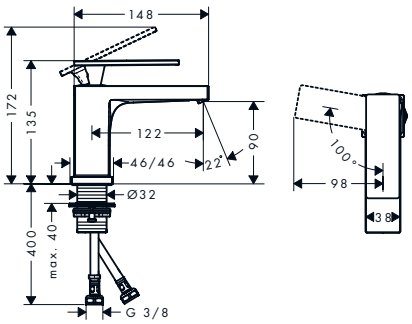

110

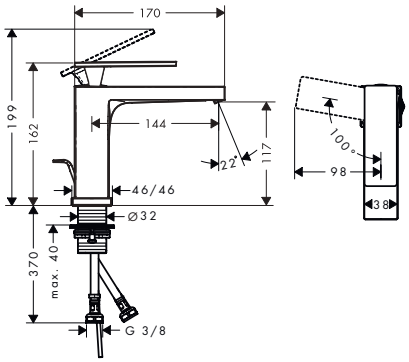

Sustainability

Technologies

Measurements within scale drawings are in mm.
Technical specifications and units of measure are subject to change.

Tecturis E Single lever basin mixers

Overview variants

ComfortZone	Projection (mm)	Spout height (mm)	Waste set	Material waste set	CoolStart	Max. flow rate at 3 bar (l/min)	Finish	Code no.
80	122	90	pop-up	metal	■	4	Chrome	73002000
							Brushed Bronze	73002140
							Matt Black	73002670
							Matt White	73002700
80	122	90	without	–	■	4	Chrome	73001000
							Brushed Bronze	73001140
							Matt Black	73001670
							Matt White	73001700
80	122	90	pop-up	metal	■	5	Chrome	73004000
							Brushed Bronze	73004140
							Matt Black	73004670
							Matt White	73004700
110	144	117	pop-up	metal	■	4	Chrome	73014000
							Brushed Bronze	73014140
							Matt Black	73014670
							Matt White	73014700
110	144	117	without	–	■	4	Chrome	73012000
							Brushed Bronze	73012140
							Matt Black	73012670
							Matt White	73012700
110	144	117	pop-up	metal	–	4	Chrome	73010000
							Brushed Bronze	73010140
							Matt Black	73010670
							Matt White	73010700
110	144	117	without	–	–	4	Chrome	73011000
							Brushed Bronze	73011140
							Matt Black	73011670
							Matt White	73011700
110	144	117	pop-up	metal	■	5	Chrome	73018000
							Brushed Bronze	73018140
							Matt Black	73018670
							Matt White	73018700
110	144	117	without	–	■	5	Chrome	73016000
							Brushed Bronze	73016140
							Matt Black	73016670
							Matt White	73016700

Measurements within scale drawings are in mm.
Technical specifications and units of measure are subject to change.

Tecturis E Pillar tap 80 EcoSmart+ with lever handle for cold water or pre-adjusted water without waste set

Features

- ComfortZone: 80
- projection: 122 mm
- spout height: 90 mm
- handle variant: lever handle
- spray type: WaterfallStream
- maximum flow rate at 3 bar: 4 l/min
- ceramic cartridge
- for cold water connection
- connection type: G ⅜ hose connections
- connection dimension: DN15
- EU taxonomy: max. 6 l/min - Substantial Contribution (SC) possible

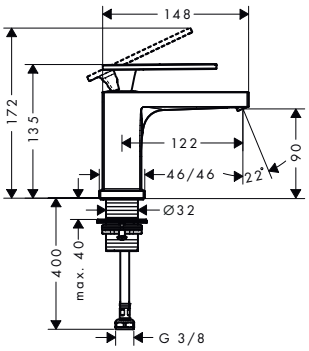

Sustainability

Technologies

Finish	Code no.
Chrome	73013000
Brushed Bronze	73013140
Matt Black	73013670
Matt White	73013700

Tecturis E Single lever basin mixer for concealed installation wall-mounted EcoSmart+ with spout 22,5 cm

Features

- consists of: single lever basin mixer for concealed installation wall-mounted, waste set
- projection: 225 mm
- handle variant: lever handle
- spray type: WaterfallStream
- maximum flow rate at 3 bar: 4 l/min
- ceramic cartridge
- temperature limitation adjustable
- suitable for continuous flow water heaters
- non-closing waste set
- material waste set: metal
- connection type: basic set
- connection dimension: DN15
- handle can be positioned on the right or left, depending on the basic set installation
- EU taxonomy: max. 6 l/min - Substantial Contribution (SC) possible

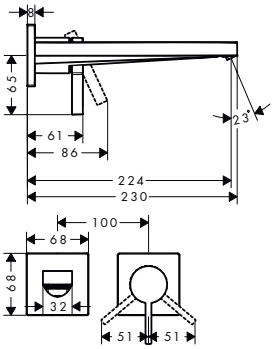

Sustainability

Technologies

Finish	Code no.
Chrome	73051000
Brushed Bronze	73051140
Matt Black	73051670
Matt White	73051700

Required parts:	Code no.
Basic set for single lever basin mixer for concealed installation wall-mounted	13622180

Measurements within scale drawings are in mm.
Technical specifications and units of measure are subject to change.

Tecturis E Single lever basin mixer 110 with bidette hand shower and shower hose 160 cm

Features

- consists of: single lever basin mixer, bidette hand shower, shower holder, shower hose, waste set
- ComfortZone: 110
- projection: 144 mm
- spout height: 117 mm
- handle variant: lever handle
- spray type: WaterfallStream
- spray type Bidette: shower spray
- maximum flow rate at 3 bar: 5,8 l/min
- ceramic cartridge
- temperature limitation adjustable
- suitable for continuous flow water heaters
- push-open waste set G 1¼
- material waste set: metal
- connection type: G ⅜ hose connections
- connection dimension: DN15
- non-return valve
- EU taxonomy: max. 6 l/min - Substantial Contribution (SC) possible

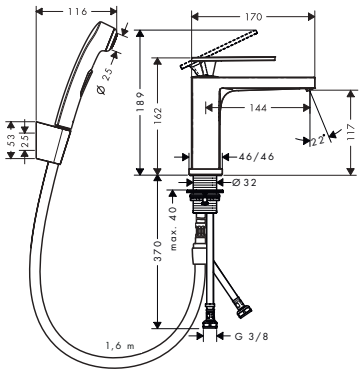

Sustainability

EcoSmart

Technologies

AirPower

Comfort Zone

Finish	Code no.
Chrome	73210000
Matt Black	73210670

Tecturis E Single lever bidet mixer with pop-up waste set

Features

- consists of: single lever bidet mixer, waste set
- projection: 130 mm
- spout height: 101 mm
- spray type: laminar spray
- maximum flow rate at 3 bar: 5 l/min
- ceramic cartridge
- temperature limitation adjustable
- suitable for continous flow water heaters
- pop-up waste set G 1¼
- material waste set: metal
- connection type: G ⅜ hose connections
- connection dimension: DN15
- EU taxonomy: max. 6 l/min - Substantial Contribution (SC) possible

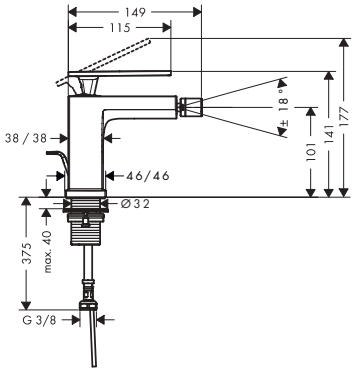

Sustainability

EcoSmart

Finish	Code no.
Chrome	73200000
Brushed Bronze	73200140
Matt Black	73200670
Matt White	73200700

Measurements within scale drawings are in mm.
Technical specifications and units of measure are subject to change.

Tecturis E Single lever bath mixer floor-standing

Features

- consists of: single lever bath mixer floor standing, baton hand shower, shower hose, shower holder
- 2 functions
- spray type mixer: WaterfallStream
- spray type hand shower: PowderRain
- maximum flow rate at 3 bar: 23,5 l/min
- flow rate for bath spout at 3 bar: 23,5 l/min
- flow rate of hand shower at 3 bar: 8 l/min
- ceramic cartridge
- pressure diverter Select with automatic resetting
- connection dimension: DN15
- connection type: basic set
- deck mounted
- min. operating pressure: 1 bar
- max. operating pressure: 10 bar

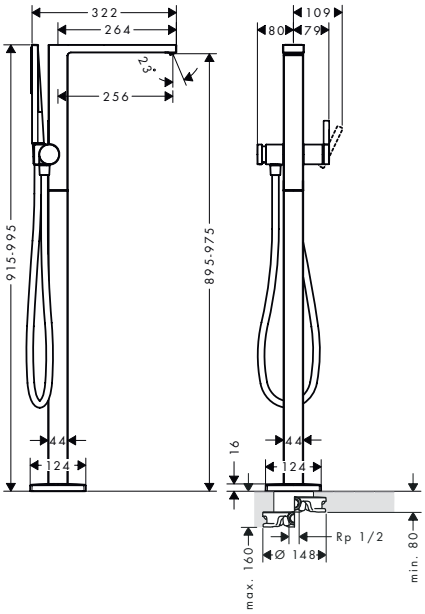

Technologies

AirPower

Spray types

Powder Rain

Finish	Code no.
Chrome	73445000
Brushed Bronze	73445140
Matt Black	73445670
Matt White	73445700

Required parts:		Code no.
	Basic set for mixers floor-standing	10452180

Optional parts:		Code no.
	Sealing foil for basic set bath mixer floor-standing	96441000

Measurements within scale drawings are in mm.
Technical specifications and units of measure are subject to change.

Tecturis E Single lever bath mixer for exposed installation

Features

- 2 functions
- projection: 213 mm
- centre distance: 150 ± 12 mm
- spray type mixer: WaterfallStream
- flow rate for bath spout at 3 bar: 25 l/min
- flow rate of hand shower at 3 bar: 14,5 l/min
- ceramic cartridge
- temperature limitation adjustable
- pressure diverter Select with automatic resetting
- protected against backflow, according to DIN EN 1717
- with silencer
- suitable for continous flow water heaters
- connection dimension: DN15
- connection type: S-connections
- wall-mounted
- min. operating pressure: 1 bar
- max. operating pressure: 10 bar

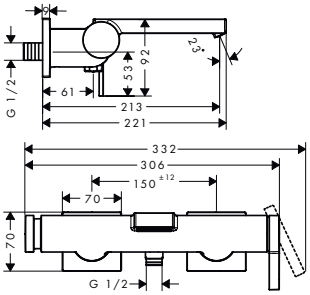

Technologies

Finish	Code no.
Chrome	73420000
Brushed Bronze	73420140
Matt Black	73420670
Matt White	73420700

DuoTurn E Mixer for concealed installation for 2 functions

Features

- 2 functions
- volume control and diverter for 2 functions
- maximum flow rate at 3 bar: 29,5 l/min
- flow rate upper outlet: 29,5 l/min
- flow rate lower outlet: 29,5 l/min
- ceramic cartridge for temperature control, shut-off/ diverter valve
- easy installation due to pre-assembled function block
- handles always at the same height regardless of the installation depth of the basic set
- escutcheon can be aligned by +/- 3°
- material escutcheon: plastic
- material handles: metal
- min. operating pressure: 1 bar
- max. operating pressure: 10 bar
- mixer is delivered with buttons Rain small, Rain large, hand sower, Waterfall, bath tub
- connection type: basic set iBox universal 2 (# 01500180)

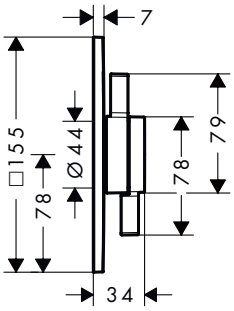

Sustainability

Finish	Code no.
Chrome	75417000
Brushed Bronze	75417140
Matt Black	75417670
Matt White	75417700

Required parts:	Code no.
iBox universal 2 Basic set	01500180

Optional parts:	Code no.
Security combination according to EN 1717	13077000

Measurements within scale drawings are in mm.
Technical specifications and units of measure are subject to change.

Tecturis E Bath spout

Features

- 1 function
- connection type: G ½
- projection: 210 mm
- wall-mounted
- maximum flow rate at 3 bar: 22 l/min
- connection dimension: DN15
- spray type: WaterfallStream

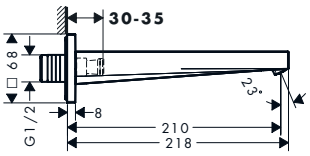

Technologies

AirPower

Finish	Code no.
Chrome	73410000
Brushed Bronze	73410140
Matt Black	73410670
Matt White	73410700

Optional parts:	Code no.
Socket for G1/2 connection	95626000

Tecturis E 3-hole rim mounted single lever bath mixer with sBox

Features

- consists of: 3-hole rim mounted single lever bath mixer, hand shower, shower holder, hose box, shower hose
- 2 functions
- projection: 206 mm
- spray type mixer: WaterfallStream
- spray type hand shower: PowderRain
- maximum pull-out length of hand shower: 1,45 m
- maximum flow rate at 3 bar: 23 l/min
- diverter with automatic resetting
- non-return valve
- protected against backflow, according to DIN EN 1717
- suitable for continous flow water heaters
- connection dimension: DN15
- connection type: basic set
- installation on bath rim
- min. operating pressure: 1 bar
- max. operating pressure: 10 bar

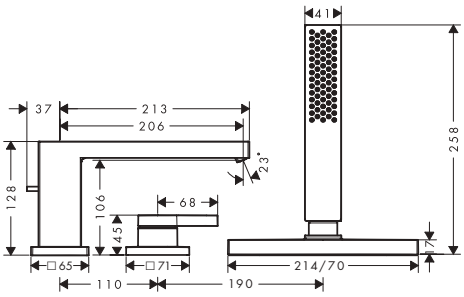

Technologies

AirPower

Spray types

Powder Rain

Finish	Code no.
Chrome	73443000
Brushed Bronze	73443140
Matt Black	73443670
Matt White	73443700

Required parts:	Code no.
Basic set for 3-hole rim mounted single lever bath mixer	13481180

Measurements within scale drawings are in mm.
Technical specifications and units of measure are subject to change.

Tecturis E Single lever shower mixer for exposed installation

Features

- 1 function
- centre distance: 150 ± 12 mm
- maximum flow rate at 3 bar: 14,9 l/min
- ceramic cartridge
- temperature limitation adjustable
- non-return valve
- with silencer
- suitable for continous flow water heaters
- hose connection DN15
- connection dimension: DN15
- min. operating pressure: 1 bar
- max. operating pressure: 10 bar
- connection type: S-connections

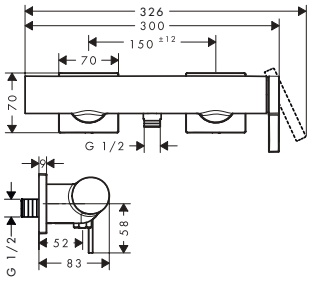

Finish	Code no.
Chrome	73620000
Brushed Bronze	73620140
Matt Black	73620670
Matt White	73620700

DuoTurn E Mixer for concealed installation for 1 function

Features

- 1 function
- volume control for 1 function
- maximum flow rate at 3 bar: 29,5 l/min
- ceramic cartridge for temperature control, 1/2" ceramic shut-off valve
- flat escutcheon for more space in the shower
- easy installation due to pre-assembled function block
- handles always at the same height regardless of the installation depth of the basic set
- escutcheon can be aligned by +/- 3°
- material escutcheon: plastic
- material handles: metal
- min. operating pressure: 1 bar
- max. operating pressure: 10 bar
- mixer is delivered with button hand shower
- connection type: basic set iBox universal 2 (# 01500180)

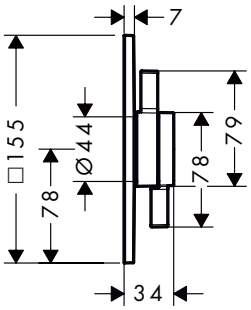

Sustainability

Water Flow Control

Finish	Code no.
Chrome	75617000
Brushed Bronze	75617140
Matt Black	75617670
Matt White	75617700

Required parts:	Code no.
iBox universal 2 Basic set	01500180

Measurements within scale drawings are in mm.
Technical specifications and units of measure are subject to change.

Vivenis

Vivenis Single lever basin mixers

Features of all variants

- handle variant: lever handle
- spray type: WaterfallStream
- maximum flow rate at 3 bar: 5 l/min
- ceramic cartridge
- temperature limitation adjustable
- suitable for continuous flow water heaters
- connection type: G ⅜ hose connections
- connection dimension: DN15
- EU taxonomy: max. 6 l/min - Substantial Contribution (SC) possible

80

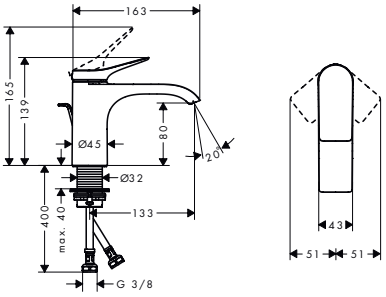

110

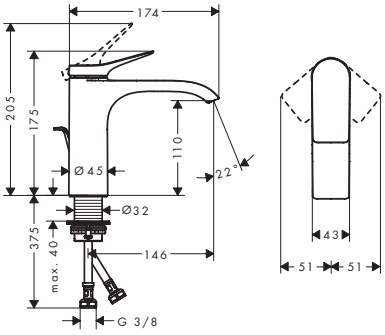

250

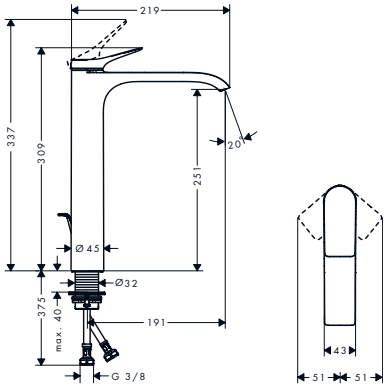

Sustainability

CoolStart, EcoSmart

Technologies

AirPower, Comfort Zone

Overview variants

Comfort-Zone	Projection (mm)	Spout height (mm)	Waste set	Material waste set	CoolStart	For wash bowls	Finish	Available from	Code no.
80	133	80	pop-up	metal	■	–	Chrome	Q1/2025	75014000
							Matt Black	Q1/2025	75014670
							Matt White	Q1/2025	75014700
80	133	80	without	–	■	–	Chrome	Q1/2025	75015000
							Matt Black	Q1/2025	75015670
							Matt White	Q1/2025	75015700
80	133	80	pop-up	metal	–	–	Chrome		75010000
							Matt Black		75010670
							Matt White		75010700
80	133	80	without	–	–	–	Chrome		75012000
							Matt Black		75012670
							Matt White		75012700
110	146	110	pop-up	metal	■	–	Chrome		75023000
							Matt Black		75023670
							Matt White		75023700

Measurements within scale drawings are in mm.
Technical specifications and units of measure are subject to change.

Vivenis Single lever basin mixers

Overview variants

Comfort-Zone	Projection (mm)	Spout height (mm)	Waste set	Material waste set	CoolStart	For wash bowls	Finish	Available from	Code no.
110	146	110	without	–	■	–	Chrome		75024000
							Matt Black		75024670
							Matt White		75024700
110	146	110	pop-up	metal	–	–	Chrome		75020000
							Matt Black		75020670
							Matt White		75020700
110	146	110	without	–	–	–	Chrome		75022000
							Matt Black		75022670
							Matt White		75022700
250	191	251	pop-up	metal	■	■	Chrome	Q1/2025	75044000
							Matt Black	Q1/2025	75044670
							Matt White	Q1/2025	75044700
250	191	251	without	–	■	■	Chrome	Q1/2025	75045000
							Matt Black	Q1/2025	75045670
							Matt White	Q1/2025	75045700
250	191	251	pop-up	metal	–	■	Chrome		75040000
							Matt Black		75040670
							Matt White		75040700
250	191	251	without	–	–	■	Chrome		75042000
							Matt Black		75042670
							Matt White		75042700

Vivenis Single lever basin mixers with swivel spout

Features of all variants

- ComfortZone: 210
- projection: 139 mm
- spout height: 209 mm
- handle variant: lever handle
- swivel range 120°
- spray type: WaterfallStream
- maximum flow rate at 3 bar: 5 l/min
- ceramic cartridge
- temperature limitation adjustable
- suitable for continuous flow water heaters
- connection type: G ⅜ hose connections
- connection dimension: DN15
- EU taxonomy: max. 6 l/min - Substantial Contribution (SC) possible

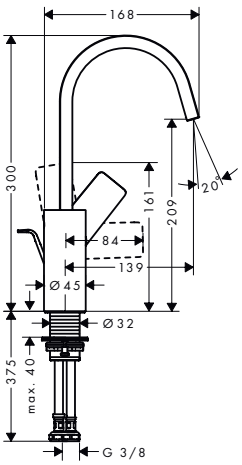

Sustainability

EcoSmart

Technologies

AirPower

Comfort Zone

For more information about this product, please see the next page.

Measurements within scale drawings are in mm.
Technical specifications and units of measure are subject to change.

Vivenis Single lever basin mixers with swivel spout

Overview variants

ComfortZone	Projection (mm)	Spout height (mm)	Waste set	Material waste set	Finish	Code no.
210	139	209	pop-up	metal	Chrome	75030000
					Matt Black	75030670
					Matt White	75030700
210	139	209	without	–	Chrome	75032000
					Matt Black	75032670
					Matt White	75032700

Vivenis Pillar tap 80 with lever handle for cold water or pre-adjusted water without waste set

Features

- ComfortZone: 80
- projection: 133 mm
- spout height: 80 mm
- handle variant: lever handle
- spray type: WaterfallStream
- maximum flow rate at 3 bar: 5 l/min
- ceramic cartridge
- for cold water connection
- connection type: G ⅜ hose connection
- connection dimension: DN15
- EU taxonomy: max. 6 l/min - Substantial Contribution (SC) possible

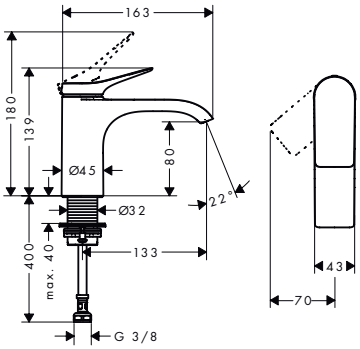

Sustainability

EcoSmart

Technologies

AirPower Comfort Zone

Finish	Code no.
Chrome	75013000
Matt Black	75013670
Matt White	75013700

Vivenis 3-hole basin mixer 90 with pop-up waste set

Features

- consists of: 3-hole basin mixer, waste set
- ComfortZone: 90
- projection: 150 mm
- spout height: 91 mm
- handle variant: lever handle
- spray type: WaterfallStream
- maximum flow rate at 3 bar: 5 l/min
- ceramic valves hot/cold 90°
- suitable for continuous flow water heaters
- pop-up waste set G 1¼
- material waste set: metal
- connection type: G ⅜ hose connections
- connection dimension: DN15
- EU taxonomy: max. 6 l/min - Substantial Contribution (SC) possible

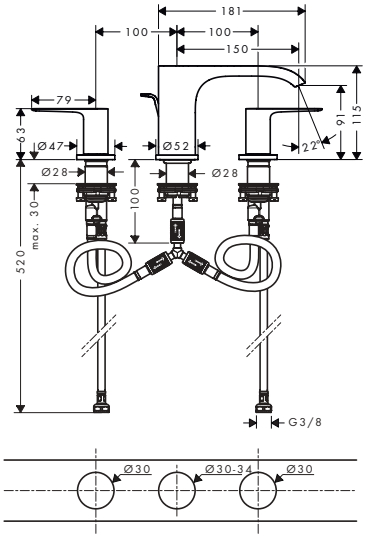

Sustainability

EcoSmart

Technologies

AirPower Comfort Zone

Finish	Code no.
Chrome	75033000
Matt Black	75033670
Matt White	75033700

Measurements within scale drawings are in mm.
Technical specifications and units of measure are subject to change.

Vivenis Single lever basin mixer for concealed installation wall-mounted with spout 19,2 cm

Features

- consists of: single lever basin mixer for concealed installation wall-mounted, waste set
- projection: 192 mm
- handle variant: lever handle
- spray type: WaterfallStream
- maximum flow rate at 3 bar: 5 l/min
- ceramic cartridge
- temperature limitation adjustable
- suitable for continuous flow water heaters
- non-closing waste set
- material waste set: metal
- connection type: basic set
- connection dimension: DN15
- handle can be positioned on the right or left, depending on the basic set installation
- EU taxonomy: max. 6 l/min - Substantial Contribution (SC) possible

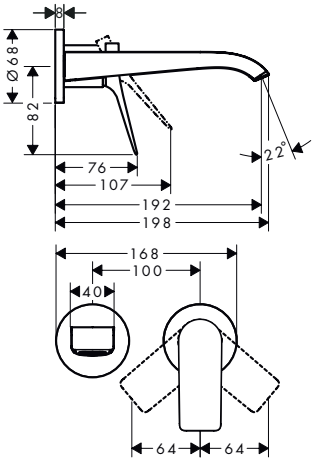

Sustainability

EcoSmart

Technologies

AirPower

Finish	Code no.
Chrome	75050000
Matt Black	75050670
Matt White	75050700

Required parts:	Code no.
Basic set for single lever basin mixer for concealed installation wall-mounted	13622180

Vivenis Single lever basin mixer with bidette hand shower and shower hose 160 cm

Features

- consists of: single lever basin mixer, bidette hand shower, shower holder, shower hose, waste set
- ComfortZone: 110
- projection: 146 mm
- spout height: 110 mm
- handle variant: lever handle
- spray type: WaterfallStream
- maximum flow rate at 3 bar: 4,4 l/min
- ceramic cartridge
- temperature limitation adjustable
- suitable for continuous flow water heaters
- push-open waste set G 1¼
- material waste set: metal
- connection type: G ⅜ hose connections
- connection dimension: DN15
- EU taxonomy: max. 6 l/min - Substantial Contribution (SC) possible

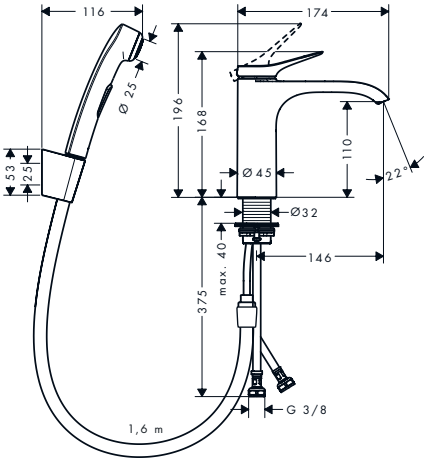

Sustainability

EcoSmart

Technologies

AirPower

Comfort Zone

Finish	Code no.
Chrome	75210000

Vivenis Single lever bidet mixer with pop-up waste set

Features

- consists of: single lever bidet mixer, waste set
- projection: 130 mm
- spout height: 81 mm
- ball-pivot joint
- spray type: laminar spray
- maximum flow rate at 3 bar: 7,5 l/min
- ceramic cartridge
- temperature limitation adjustable
- suitable for continous flow water heaters
- pop-up waste set G 1¼
- material waste set: metal
- connection type: G ⅜ hose connections
- connection dimension: DN15

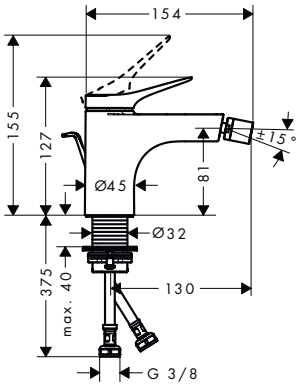

Finish	Code no.
Chrome	75200000
Matt Black	75200670
Matt White	75200700

Vivenis Single lever bath mixer floor-standing

Features

- consists of: single lever bath mixer floor standing, baton hand shower, shower hose, shower holder
- 2 functions
- projection: 236 mm
- spray type mixer: WaterfallStream
- spray type hand shower: Rain, MonoRain
- maximum flow rate at 3 bar: 21,3 l/min
- flow rate for bath spout at 3 bar: 21,3 l/min
- flow rate of hand shower at 3 bar: 13,4 l/min
- ceramic cartridge
- temperature limitation adjustable
- diverter with automatic resetting
- non-return valve
- connection dimension: DN15
- connection type: basic set
- deck mounted
- min. operating pressure: 1 bar
- max. operating pressure: 10 bar

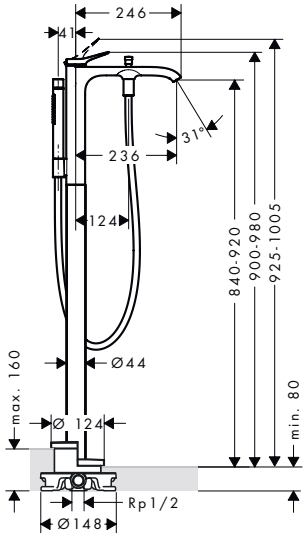

Technologies

Spray types

Finish	Code no.
Chrome	75445000
Matt Black	75445670
Matt White	75445700

Required parts:	Code no.
Basic set for mixers floor-standing	10452180

Optional parts:	Code no.
Sealing foil for basic set bath mixer floor-standing	96441000

Measurements within scale drawings are in mm.
Technical specifications and units of measure are subject to change.

Vivenis Single lever bath mixer for exposed installation

Features

- 2 functions
- projection: 216 mm
- centre distance: 150 ± 12 mm
- spray type mixer: WaterfallStream
- maximum flow rate at 3 bar: 19,4 l/min
- flow rate for bath spout at 3 bar: 19,4 l/min
- ceramic cartridge
- temperature limitation adjustable
- pressure diverter Select with automatic resetting
- protected against backflow, according to DIN EN 1717
- with silencer
- suitable for continous flow water heaters
- connection dimension: DN15
- connection type: S-connections
- wall-mounted
- min. operating pressure: 1 bar
- max. operating pressure: 10 bar

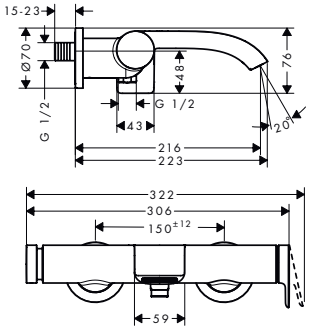

Technologies

AirPower | Select

Finish	Code no.
Chrome	75420000
Matt Black	75420670
Matt White	75420700

Vivenis Single lever bath mixers for concealed installation for iBox universal

Features of all variants

- 2 functions
- flow rate upper outlet: 21 l/min
- ceramic cartridge
- temperature limitation adjustable
- diverter with automatic resetting
- with silencer
- connection type: basic set
- wall-mounted
- min. operating pressure: 1 bar
- max. operating pressure: 10 bar

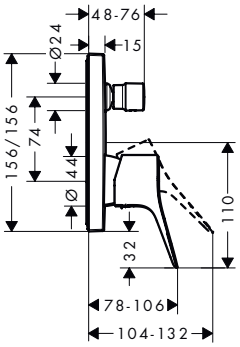

Overview variants

Security combination EN 1717	Max. flow rate at 3 bar (l/min)	Finish	Code no.
–	29	Chrome	75415000
		Matt Black	75415670
		Matt White	75415700
■	25	Chrome	75416000
		Matt Black	75416670
		Matt White	75416700

Required parts (choose one):			Code no.
Option 1		iBox universal 2 Basic set	01500180
	+	Adapter plate for iBox universal 2	13588000
Option 2		iBox universal Basic set	01800180

Measurements within scale drawings are in mm.
Technical specifications and units of measure are subject to change.

Vivenis Bath spout

Features

- 1 function
- connection type: G ½
- with escutcheon
- projection: 202 mm
- wall-mounted
- maximum flow rate at 3 bar: 24,3 l/min
- spray type: WaterfallStream

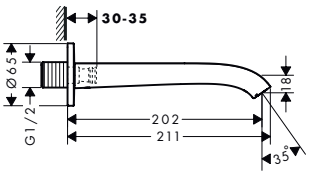

Technologies

AirPower

Finish	Code no.
Chrome	75410000
Matt Black	75410670
Matt White	75410700

Optional parts:	Code no.
Connecting thread G ¾	92504000

Vivenis 4-hole rim mounted bath mixer with sBox

Features

- consists of: 4-hole rim mounted bath mixer, hand shower, shower hose, shower holder, hose box
- 2 functions
- spray type hand shower: PowderRain
- maximum pull-out length of hand shower: 1,45 m
- sBox for quiet, smooth and protected hose guidance
- maximum flow rate at 3 bar: 23,9 l/min
- flow rate for bath spout at 3 bar: 23,9 l/min
- flow rate of hand shower at 3 bar: 10,5 l/min
- non-return valve
- connection dimension: DN15
- connection type: basic set
- installation on bath rim
- min. operating pressure: 1 bar
- max. operating pressure: 10 bar

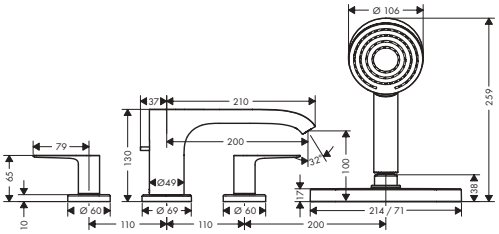

Technologies

AirPower

Spray types

Powder Rain

Finish	Code no.
Chrome	75444000
Matt Black	75444670
Matt White	75444700

Required parts:	Code no.
Basic set for 4-hole rim mounted bath mixer	13440180

Measurements within scale drawings are in mm.
Technical specifications and units of measure are subject to change.

Vivenis Single lever shower mixer for exposed installation

Features

- 1 function
- centre distance: 150 ± 12 mm
- maximum flow rate at 3 bar: 12,3 l/min
- ceramic cartridge
- temperature limitation adjustable
- non-return valve
- with silencer
- hose connection DN15
- connection dimension: DN15
- min. operating pressure: 1 bar
- max. operating pressure: 10 bar
- connection type: S-connections

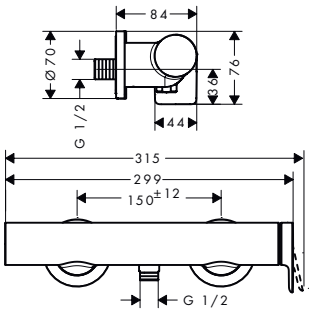

Finish	Code no.
Chrome	75620000
Matt Black	75620670
Matt White	75620700

Vivenis Single lever shower mixer for concealed installation for iBox universal

Features

- 1 function
- maximum flow rate at 3 bar: 29,3 l/min
- ceramic cartridge
- temperature limitation adjustable
- with silencer
- min. operating pressure: 1 bar
- max. operating pressure: 10 bar
- connection type: basic set

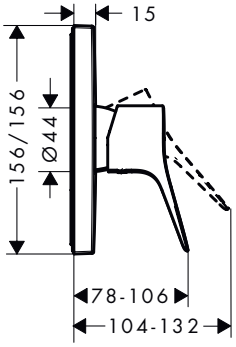

Finish	Code no.
Chrome	75615000
Matt Black	75615670
Matt White	75615700

Required parts (choose one):			Code no.
Option 1		iBox universal 2 Basic set	01500180
+		Adapter plate for iBox universal 2	13588000
Option 2		iBox universal Basic set	01800180

Measurements within scale drawings are in mm.
Technical specifications and units of measure are subject to change.

Talis

Talis S Single lever basin mixers

Features of all variants

- handle variant: pin handle
- spray type: normal spray
- maximum flow rate at 3 bar: 5 l/min
- ceramic cartridge
- temperature limitation adjustable
- suitable for continuous flow water heaters
- connection type: G ⅜ hose connections
- connection dimension: DN15
- EU taxonomy: max. 6 l/min - Substantial Contribution (SC) possible

80

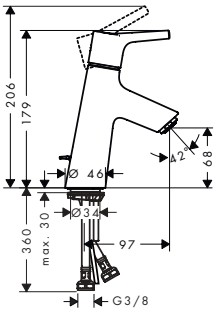

100

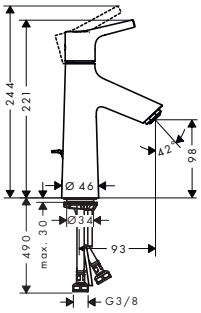

190

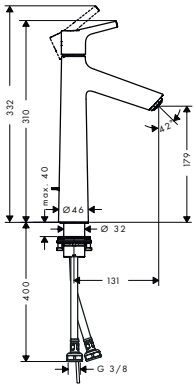

Sustainability

CoolStart, EcoSmart

Technologies

Quick Clean, AirPower, Comfort Zone

Certificates/declarations

EPD

Overview variants

ComfortZone	Projection (mm)	Spout height (mm)	Waste set	Material waste set	CoolStart	Finish	Code no.
80	97	68	pop-up	metal	■	Chrome	72013000
80	97	68	without	–	■	Chrome	72014000
80	97	68	pop-up	metal	–	Chrome	72010000
80	97	68	push-open	metal	–	Chrome	72011000
80	97	68	without	–	–	Chrome	72012000
100	93	98	pop-up	metal	■	Chrome	72022000
100	93	98	without	–	■	Chrome	72023000
100	93	98	pop-up	metal	–	Chrome	72020000
100	93	98	without	–	–	Chrome	72021000
190	131	179	pop-up	metal	–	Chrome	72031000
190	131	179	without	–	–	Chrome	72032000

Measurements within scale drawings are in mm.
Technical specifications and units of measure are subject to change.

Talis S Single lever basin mixer 100 LowFlow without waste set

Features

- ComfortZone: 100
- projection: 93 mm
- spout height: 98 mm
- handle variant: pin handle
- spray type: normal spray
- maximum flow rate at 3 bar: 2,7 l/min
- ceramic cartridge
- temperature limitation adjustable
- suitable for continuous flow water heaters
- connection type: G ⅜ hose connections
- connection dimension: DN15
- EU taxonomy: max. 6 l/min - Substantial Contribution (SC) possible

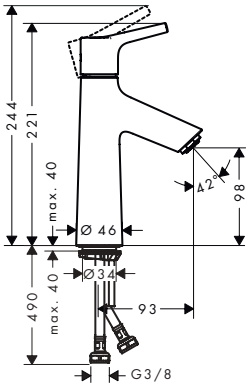

Sustainability

EcoSmart

Technologies

Quick Clean | AirPower | Comfort Zone

Finish	Code no.
Chrome	72025000

Talis S Single lever basin mixers

Features of all variants

- consists of: single lever basin mixer, waste set
- handle variant: pin handle
- spray type: normal spray
- maximum flow rate at 3 bar: 5 l/min
- ceramic cartridge
- temperature limitation adjustable
- suitable for continuous flow water heaters
- pop-up waste set G 1¼
- material waste set: metal
- connection type: G ⅜ hose connections
- connection dimension: DN15
- EU taxonomy: max. 6 l/min - Substantial Contribution (SC) possible

140

250

Sustainability

EcoSmart

Technologies

Quick Clean | AirPower | Comfort Zone

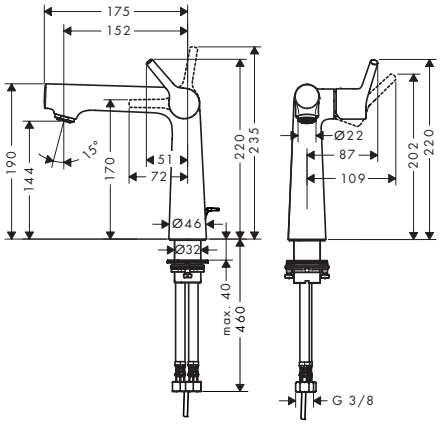

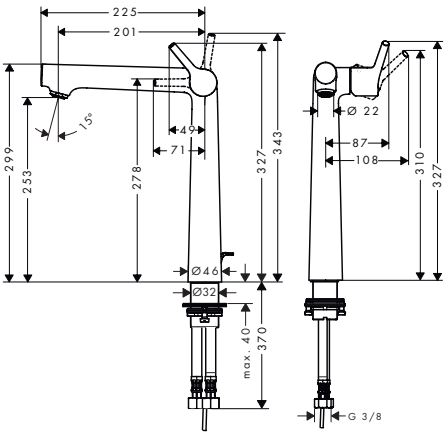

Overview variants

ComfortZone	Projection (mm)	Spout height (mm)	Waste set	Material waste set	For wash bowls	Finish	Code no.
140	152	144	pop-up	metal	–	Chrome	72113000
250	201	253	pop-up	metal	■	Chrome	72115000

Measurements within scale drawings are in mm.
Technical specifications and units of measure are subject to change.

Talis S Pillar tap 80 with pin handle for cold water or pre-adjusted water without waste set

Features

- ComfortZone: 80
- projection: 97 mm
- spout height: 68 mm
- handle variant: pin handle
- spray type: normal spray
- maximum flow rate at 3 bar: 5 l/min
- ceramic cartridge
- for cold water connection
- connection type: G ⅜ hose connection
- connection dimension: DN15
- EU taxonomy: max. 6 l/min - Substantial Contribution (SC) possible

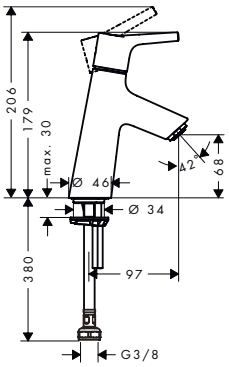

Sustainability

Technologies

Certificates/declarations

Finish	Code no.
Chrome	72017000

Talis S Pillar tap 40 for cold water or pre-adjusted water without waste set

Features

- ComfortZone: 40
- projection: 83 mm
- spout height: 35 mm
- handle variant: pin handle
- spray type: normal spray
- maximum flow rate at 3 bar: 5 l/min
- ceramic valves 90°
- for cold water connection
- connection type: G ⅜ hose connections
- connection dimension: DN15
- EU taxonomy: max. 6 l/min - Substantial Contribution (SC) possible

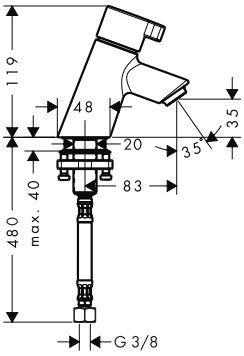

Sustainability

Technologies

Finish	Code no.
Chrome	13132000

Measurements within scale drawings are in mm.
Technical specifications and units of measure are subject to change.

Talis S Single lever basin mixers for concealed installation wall-mounted

Features of all variants

- consists of: single lever basin mixer for concealed installation wall-mounted, waste set
- handle variant: lever handle
- spray type: normal spray
- maximum flow rate at 3 bar: 5 l/min
- ceramic cartridge
- temperature limitation adjustable
- suitable for continuous flow water heaters
- non-closing waste set
- material waste set: metal
- connection type: basic set
- connection dimension: DN15
- EU taxonomy: max. 6 l/min - Substantial Contribution (SC) possible

165

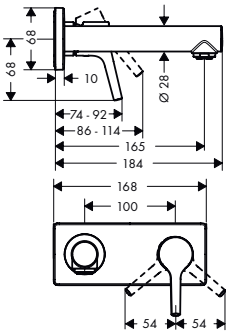

225

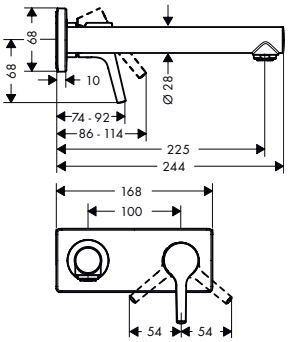

Sustainability

EcoSmart

Technologies

Quick Clean, AirPower

Certificates/declarations

EPD

Overview variants

	Projection (mm)	Finish	Code no.
	165	Chrome	72110000
	225	Chrome	72111000

Required parts:

		Code no.
	Basic set for single lever basin mixer for concealed installation wall-mounted	13622180

Talis S Single lever basin mixer with bidette hand shower and shower hose 160 cm

Features

- consists of: single lever basin mixer, bidette hand shower, shower holder, shower hose, waste set
- ComfortZone: 100
- projection: 93 mm
- spout height: 98 mm
- handle variant: lever handle
- maximum flow rate at 3 bar: 5,7 l/min
- ceramic cartridge
- temperature limitation adjustable
- suitable for continuous flow water heaters
- push-open waste set G 1¼
- material waste set: synthetic
- connection type: G ⅜ hose connections
- connection dimension: DN15
- EU taxonomy: max. 6 l/min - Substantial Contribution (SC) possible

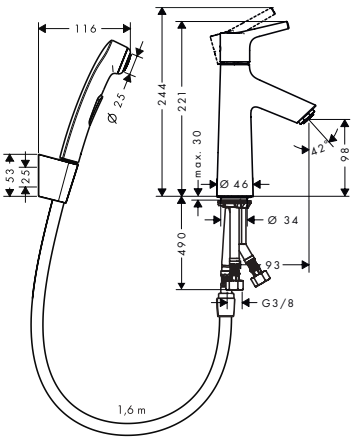

Sustainability

EcoSmart

Technologies

Quick Clean, AirPower, Comfort Zone

Certificates/declarations

EPD

Finish	Code no.
Chrome	72290000

Talis S Single lever bidet mixer with pop-up waste set

Features

- consists of: single lever bidet mixer, waste set
- projection: 109 mm
- spout height: 100 mm
- aerator with ball pivot
- spray type: normal spray
- maximum flow rate at 3 bar: 5 l/min
- ceramic cartridge
- temperature limitation adjustable
- suitable for continous flow water heaters
- material waste set: metal
- connection type: G ⅜ hose connections
- connection dimension: DN15
- EU taxonomy: max. 6 l/min - Substantial Contribution (SC) possible

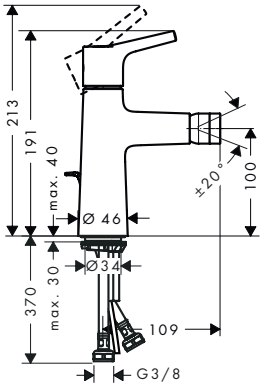

Sustainability

EcoSmart

Technologies

Quick Clean, AirPower

Certificates/declarations

EPD

Finish	Code no.
Chrome	72200000

Talis S Single lever bath mixer floor-standing

Features

- consists of: single lever bath mixer floor standing, baton hand shower, shower hose, shower holder
- 2 functions
- projection: 245 mm
- spray type mixer: normal spray
- spray type hand shower: Rain, MonoRain
- maximum flow rate at 3 bar: 20 l/min
- flow rate for bath spout at 3 bar: 21,8 l/min
- flow rate of hand shower at 3 bar: 14,8 l/min
- ceramic cartridge
- diverter with automatic resetting
- non-return valve
- connection dimension: DN15
- connection type: basic set
- deck mounted
- min. operating pressure: 1 bar

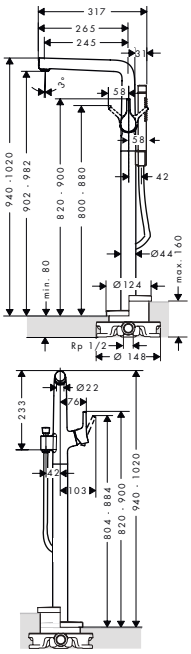

Technologies

Quick Clean, AirPower

Spray types

Mono Rain, Rain

Certificates/declarations

EPD

Finish	Code no.
Chrome	72412000

Required parts:	Code no.
Basic set for mixers floor-standing	10452180

Optional parts:	Code no.
Sealing foil for basic set bath mixer floor-standing	96441000

Measurements within scale drawings are in mm.
Technical specifications and units of measure are subject to change.

Talis S Single lever bath mixers for exposed installation

Features of all variants

- 2 functions
- spray type mixer: normal spray
- ceramic cartridge
- temperature limitation adjustable
- diverter with automatic resetting
- protected against backflow, according to DIN EN 1717
- with silencer
- suitable for continous flow water heaters
- connection dimension: DN15
- wall-mounted
- min. operating pressure: 1 bar
- max. operating pressure: 10 bar

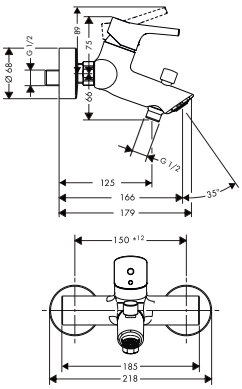

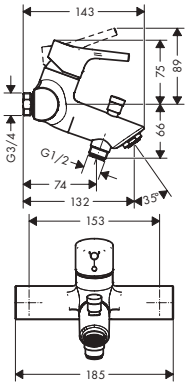

Technologies

Quick Clean | AirPower

Certificates/declarations

EPD

Overview variants

Centre distance (mm)	Projection (mm)	Max. flow rate at 3 bar (l/min)	Finish	Code no.
150 ± 12	166	20	Chrome	72400000
153	132	19	Chrome	72401000

Talis S Single lever bath mixers for concealed installation for iBox universal

Features of all variants

- 2 functions
- ceramic cartridge
- temperature limitation adjustable
- diverter with automatic resetting
- with silencer
- connection type: basic set
- wall-mounted
- min. operating pressure: 1 bar
- max. operating pressure: 10 bar

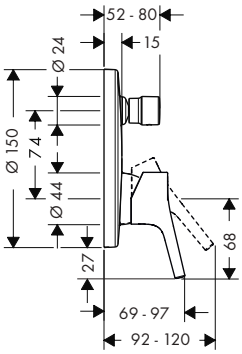

Certificates/declarations

EPD

Overview variants

Security combination EN 1717	Max. flow rate at 3 bar (l/min)	Finish	Code no.
–	29	Chrome	72405000
■	25	Chrome	72406000

Required parts (choose one):			Code no.
Option 1		iBox universal 2 Basic set	01500180
	+	Adapter plate for iBox universal 2	13588000
Option 2		iBox universal Basic set	01800180

Measurements within scale drawings are in mm.
Technical specifications and units of measure are subject to change.

Talis S Bath spout

Features

- 1 function
- connection type: G ¾
- with silencer
- with escutcheon
- projection: 175 mm
- wall-mounted
- maximum flow rate at 3 bar: 21,5 l/min
- connection dimension: DN20
- spray type: normal spray

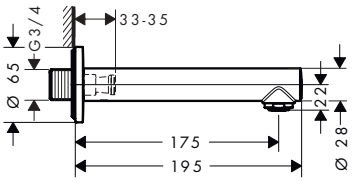

Technologies

Finish	Code no.
Chrome	72410000

Optional parts:	Code no.
Socket for G1/2 connection	95626000

Bath spouts

Features of all variants

- 2 functions
- connection type: G ½
- with automatic resetting
- with escutcheon
- wall-mounted
- maximum flow rate at 3 bar: 25 l/min
- connection dimension: DN15
- protected against backflow, according to DIN EN 1717

Technologies

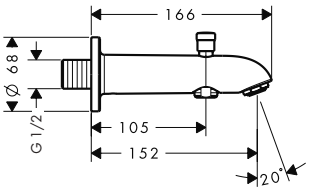

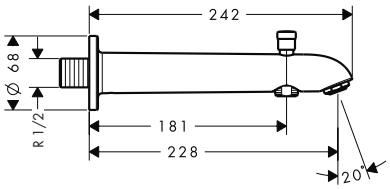

Overview variants

	Projection (mm)	Finish	Code no.
	152	Chrome	13423000
	228	Chrome	13424000

Measurements within scale drawings are in mm.
Technical specifications and units of measure are subject to change.

Bath spout

Features

- 1 function
- with escutcheon
- projection: 147 mm
- wall-mounted
- maximum flow rate at 3 bar: 27,5 l/min
- connection dimension: DN20

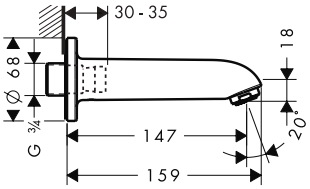

Technologies

Finish	Code no.
Chrome	13414000

Talis S 3-hole rim mounted single lever bath mixer for Secuflex

Features

- consists of: 3-hole rim mounted single lever bath mixer, hand shower, shower holder
- 2 functions
- projection: 200 mm
- spray type mixer: normal spray
- spray type hand shower: Rain
- maximum pull-out length of hand shower: 1.10 m
- maximum flow rate at 3 bar: 18 l/min
- flow rate of hand shower at 3 bar: 15,1 l/min
- temperature limitation adjustable
- connection dimension: DN15
- installation on bath rim
- min. operating pressure: 1 bar
- max. operating pressure: 10 bar

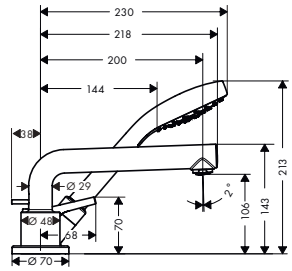

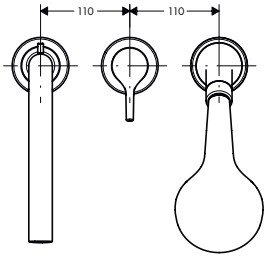

Technologies

Spray types

Finish	Code no.
Chrome	72416000

Required parts:	Code no.
Basic set for 3-hole rim mounted single lever bath mixer	13437180

Measurements within scale drawings are in mm.
Technical specifications and units of measure are subject to change.

Talis S 3-hole rim mounted single lever bath mixer

Features

- consists of: 3-hole rim mounted single lever bath mixer, hand shower, shower holder
- 2 functions
- projection: 200 mm
- spray type mixer: normal spray
- spray type hand shower: Rain
- maximum pull-out length of hand shower: 1.60 m
- maximum flow rate at 3 bar: 19 l/min
- flow rate for bath spout at 3 bar: 19 l/min
- flow rate of hand shower at 3 bar: 15 l/min
- ceramic cartridge
- temperature limitation adjustable
- connection dimension: DN15
- installation on bath rim
- min. operating pressure: 1 bar
- max. operating pressure: 10 bar

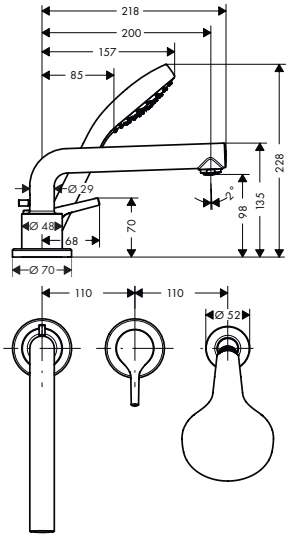

Technologies

Spray types

Finish	Code no.
Chrome	72417000

Required parts:	Code no.
Basic set for 3-hole rim mounted single lever bath mixer	13439180

Talis S 4-hole rim mounted bath mixer

Features

- consists of: 4-hole rim mounted bath mixer, hand shower, shower holder
- 2 functions
- projection: 200 mm
- maximum pull-out length of hand shower: 1.60 m
- maximum flow rate at 3 bar: 23,8 l/min
- flow rate for bath spout at 3 bar: 23,8 l/min
- flow rate of hand shower at 3 bar: 16,7 l/min
- non-return valve
- protected against backflow, according to DIN EN 1717
- connection dimension: DN15
- installation on bath rim
- min. operating pressure: 1 bar
- max. operating pressure: 10 bar

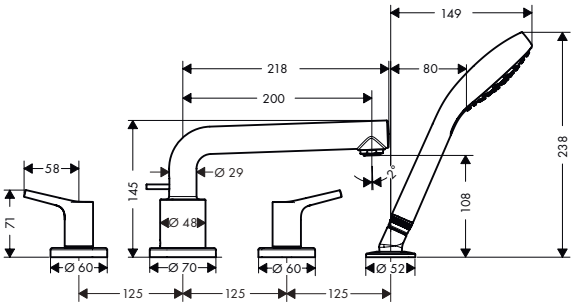

Technologies

Finish	Code no.
Chrome	72419000

Required parts:	Code no.
Basic set for 4-hole rim mounted bath mixer	13244180

Measurements within scale drawings are in mm.
Technical specifications and units of measure are subject to change.

Talis S Single lever shower mixers for exposed installation

Features of all variants

- 1 function
- ceramic cartridge
- temperature limitation adjustable
- non-return valve
- with silencer
- hose connection DN15
- connection dimension: DN15

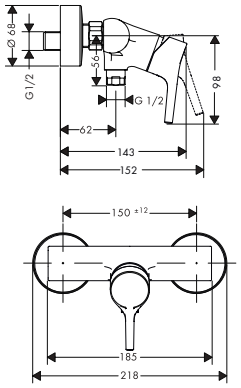

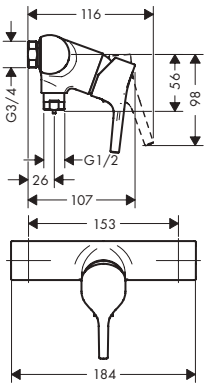

Certificates/declarations

Overview variants

Centre distance (mm)	Max. flow rate at 3 bar (l/min)	Finish	Code no.
150 ± 12	31	Chrome	72600000
153	24	Chrome	72601000

Talis S Single lever shower mixer for concealed installation for iBox universal

Features

- 1 function
- maximum flow rate at 3 bar: 29,3 l/min
- ceramic cartridge
- temperature limitation adjustable
- connection type: basic set

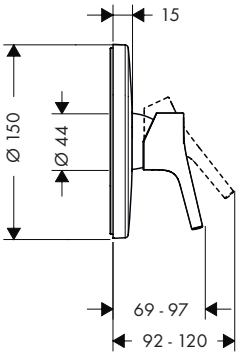

Certificates/declarations

Finish	Code no.
Chrome	72605000

Required parts (choose one):			Code no.
Option 1		iBox universal 2 Basic set	01500180
	+	Adapter plate for iBox universal 2	13588000
Option 2		iBox universal Basic set	01800180

Measurements within scale drawings are in mm.
Technical specifications and units of measure are subject to change.

Talis S Single lever shower mixer for concealed installation

Features

- 1 function
- maximum flow rate at 3 bar: 28 l/min
- connection type: basic set

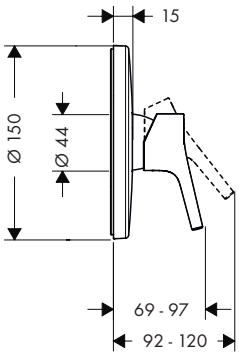

Finish	Code no.
Chrome	72606000

Required parts:	Code no.
Basic set for single lever shower mixer for concealed installation	13620180

Measurements within scale drawings are in mm.
Technical specifications and units of measure are subject to change.

Talis Select E Basin mixers

Features of all variants

- handle variant: cylinder handle
- spray type: normal spray
- maximum flow rate at 3 bar: 5 l/min
- Select cartridge with temperature control
- temperature limitation adjustable
- suitable for continuous flow water heaters
- connection type: G ⅜ hose connections
- connection dimension: DN15
- EU taxonomy: max. 6 l/min - Substantial Contribution (SC) possible

110

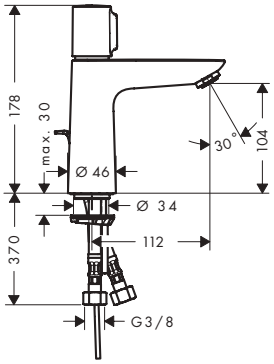

240

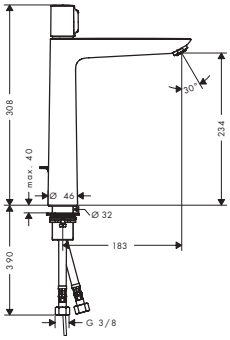

Sustainability

Technologies

Certificates/declarations

Overview variants

ComfortZone	Projection (mm)	Spout height (mm)	Waste set	Material waste set	For wash bowls	Finish	Code no.
110	112	104	pop-up	metal	–	Chrome	71750000
110	112	104	without	–	–	Chrome	71751000
240	183	234	pop-up	metal	■	Chrome	71752000
240	183	234	without	–	■	Chrome	71753000

Talis E Self-closing faucets without waste sets

Features of all variants

- ComfortZone: 110
- projection: 111 mm
- spout height: 106 mm
- handle variant: cylinder handle
- spray type: normal spray
- maximum flow rate at 3 bar: 5 l/min
- running time: 3 - 20 seconds adjustable (7 seconds pre-set)
- connection dimension: DN15
- service tool #93913000 must be used for thermal disinfection
- EU taxonomy: max. 6 l/min - Substantial Contribution (SC) possible

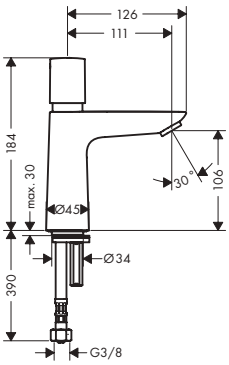

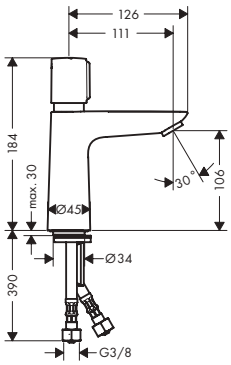

Sustainability

Technologies

Overview variants

ComfortZone	Projection (mm)	Spout height (mm)	Temperature adjustment	Finish	Code no.
110	111	106	for cold water or pre-adjusted/conditioned water	Chrome	71719000
110	111	106	adjustable	Chrome	71718000

Optional parts:		Code no.
	Service tool for thermal disinfection	93913000

Measurements within scale drawings are in mm.
Technical specifications and units of measure are subject to change.

Talis E Single lever basin mixers

Features of all variants

- handle variant: lever handle
- spray type: normal spray
- maximum flow rate at 3 bar: 5 l/min
- ceramic cartridge
- temperature limitation adjustable
- suitable for continuous flow water heaters
- connection type: G ⅜ hose connections
- connection dimension: DN15
- EU taxonomy: max. 6 l/min - Substantial Contribution (SC) possible

80

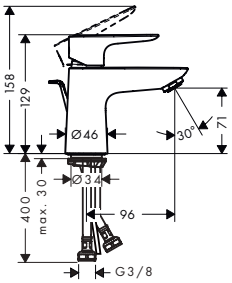

110

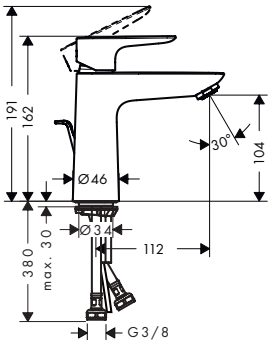

240

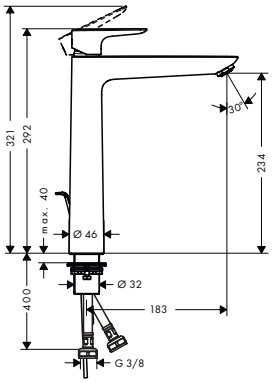

Sustainability

CoolStart, EcoSmart

Technologies

Quick Clean, AirPower, Comfort Zone

Certificates/declarations

EPD

Overview variants

ComfortZone	Projection (mm)	Spout height (mm)	Waste set	Material waste set	CoolStart	For wash bowls	Finish	Code no.
80	96	71	pop-up	metal	■	–	Chrome	71703000
80	96	71	without	–	■	–	Chrome	71704000
80	96	71	pop-up	metal	–	–	Chrome	71700000
80	96	71	push-open	metal	–	–	Chrome	71701000
80	96	71	without	–	–	–	Chrome	71702000
110	112	104	pop-up	metal	■	–	Chrome	71713000
							Brushed Bronze	71713140
							Brushed Black Chrome	71713340
							Matt Black	71713670
							Matt White	71713700
							Polished Gold Optic	71713990
110	112	104	without	–	■	–	Chrome	71714000
							Brushed Bronze	71714140
							Brushed Black Chrome	71714340
							Matt Black	71714670
							Matt White	71714700
							Polished Gold Optic	71714990

Measurements within scale drawings are in mm.
Technical specifications and units of measure are subject to change.

Talis E Single lever basin mixers

Overview variants

ComfortZone	Projection (mm)	Spout height (mm)	Waste set	Material waste set	CoolStart	For wash bowls	Finish	Code no.
110	112	104	pop-up	metal	–	–	Chrome	71710000
							Brushed Bronze	71710140
							Brushed Black Chrome	71710340
							Matt Black	71710670
							Matt White	71710700
							Polished Gold Optic	71710990
110	112	104	push-open	metal	–	–	Chrome	71711000
110	112	104	without	–	–	–	Chrome	71712000
							Brushed Bronze	71712140
							Brushed Black Chrome	71712340
							Matt Black	71712670
							Matt White	71712700
							Polished Gold Optic	71712990
240	183	234	pop-up	metal	–	■	Chrome	71716000
							Brushed Bronze	71716140
							Brushed Black Chrome	71716340
							Matt Black	71716670
							Matt White	71716700
							Polished Gold Optic	71716990
240	183	234	without	–	–	■	Chrome	71717000
							Brushed Bronze	71717140
							Brushed Black Chrome	71717340
							Matt Black	71717670
							Matt White	71717700
							Polished Gold Optic	71717990

Talis E Single lever basin mixers LowFlow

Features of all variants

- consists of: single lever basin mixer, waste set
- handle variant: lever handle
- spray type: normal spray
- maximum flow rate at 3 bar: 3,5 l/min
- ceramic cartridge
- temperature limitation adjustable
- suitable for continuous flow water heaters
- pop-up waste set G 1¼
- material waste set: metal
- connection type: G ⅜ hose connections
- connection dimension: DN15
- EU taxonomy: max. 6 l/min - Substantial Contribution (SC) possible

80

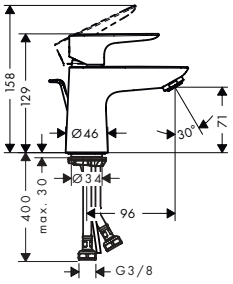

110

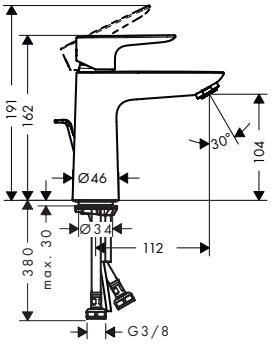

Sustainability

EcoSmart

Technologies

Quick Clean | AirPower | Comfort Zone

Overview variants

ComfortZone	Projection (mm)	Spout height (mm)	Finish	Code no.
80	96	71	Chrome	71705000
110	112	104	Chrome	71715000

Talis E Single lever basin mixer 80 for LowPressure/vented hot water cylinders with pop-up waste set

Features

- consists of: single lever basin mixer, waste set
- ComfortZone: 80
- projection: 96 mm
- spout height: 71 mm
- handle variant: lever handle
- spray type: laminar spray
- maximum flow rate at 3 bar: 5 l/min
- ceramic cartridge
- temperature limitation adjustable
- pop-up waste set G 1¼
- material waste set: metal
- connection type: G ⅜ hose connections
- EU taxonomy: max. 6 l/min - Substantial Contribution (SC) possible

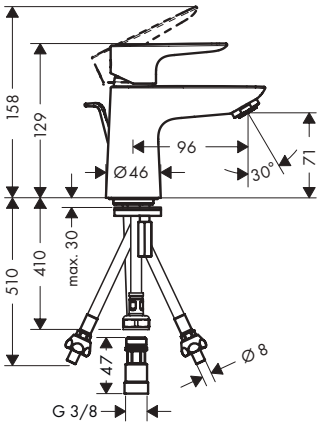

Technologies

Comfort Zone | Low Pressure

Finish	Code no.
Chrome	71707000

Measurements within scale drawings are in mm.
Technical specifications and units of measure are subject to change.

Talis E Single lever basin mixers

Features of all variants

- ComfortZone: 150
- projection: 141 mm
- spout height: 133 mm
- handle variant: lever handle
- spray type: normal spray
- maximum flow rate at 3 bar: 5 l/min
- ceramic cartridge
- temperature limitation adjustable
- suitable for continuous flow water heaters
- connection type: G ⅜ hose connections
- connection dimension: DN15
- EU taxonomy: max. 6 l/min - Substantial Contribution (SC) possible

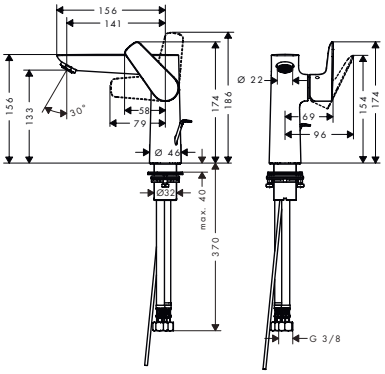

Sustainability

Technologies

Certificates/declarations

Overview variants

ComfortZone	Projection (mm)	Spout height (mm)	Waste set	Material waste set	Finish	Code no.
150	141	133	pop-up	metal	Chrome	71754000
					Brushed Bronze	71754140
					Brushed Black Chrome	71754340
					Matt Black	71754670
					Matt White	71754700
					Polished Gold Optic	71754990
150	141	133	without	–	Chrome	71755000

Talis E Pillar tap 80 with lever handle for cold water or pre-adjusted water without waste set

Features

- ComfortZone: 80
- projection: 96 mm
- spout height: 71 mm
- handle variant: lever handle
- spray type: normal spray
- maximum flow rate at 3 bar: 5 l/min
- ceramic cartridge
- for cold water connection
- connection type: G ⅜ hose connection
- connection dimension: DN15
- EU taxonomy: max. 6 l/min - Substantial Contribution (SC) possible

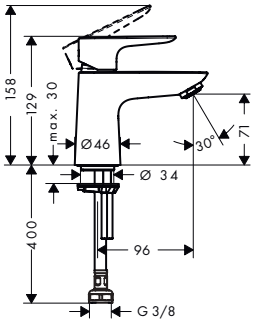

Sustainability

Technologies

Certificates/declarations

Finish	Code no.
Chrome	71706000

Measurements within scale drawings are in mm.
Technical specifications and units of measure are subject to change.

Talis E 3-hole basin mixer with pop-up waste set

Features

- consists of: 3-hole basin mixer, waste set
- ComfortZone: 150
- projection: 112 mm
- spout height: 104 mm
- handle variant: lever handle
- maximum flow rate at 3 bar: 5 l/min
- ceramic valves hot/cold 90°
- suitable for continuous flow water heaters
- pop-up waste set G 1¼
- material waste set: metal
- connection type: G ⅜ hose connections
- connection dimension: DN15
- EU taxonomy: max. 6 l/min - Substantial Contribution (SC) possible

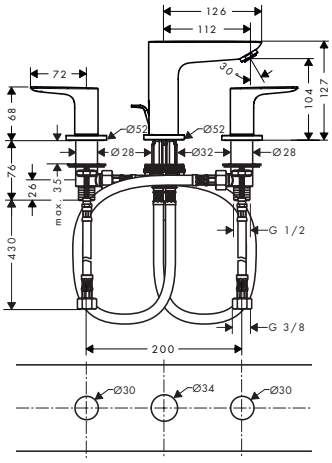

Sustainability

Technologies

Certificates/declarations

Finish	Code no.
Chrome	71733000
Brushed Bronze	71733140
Brushed Black Chrome	71733340
Matt Black	71733670
Matt White	71733700
Polished Gold Optic	71733990

Talis E Single lever basin mixers for concealed installation wall-mounted

Features of all variants

- consists of: single lever basin mixer for concealed installation wall-mounted, waste set
- handle variant: lever handle
- spray type: normal spray
- maximum flow rate at 3 bar: 5 l/min
- ceramic cartridge
- temperature limitation adjustable
- suitable for continuous flow water heaters
- non-closing waste set
- material waste set: metal
- connection type: basic set
- connection dimension: DN15
- EU taxonomy: max. 6 l/min - Substantial Contribution (SC) possible

165

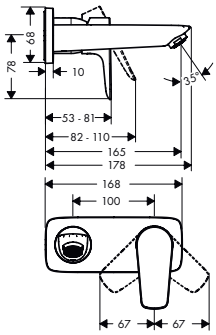

225

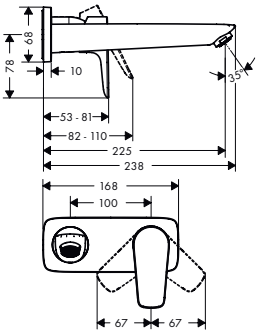

Sustainability

Technologies

Certificates/declarations

Overview variants

Projection (mm)	Finish	Code no.
165	Chrome	71732000
225	Chrome	71734000
	Brushed Bronze	71734140
	Brushed Black Chrome	71734340
	Matt Black	71734670
	Matt White	71734700
	Polished Gold Optic	71734990

Measurements within scale drawings are in mm.
Technical specifications and units of measure are subject to change.

Talis E Single lever basin mixers for concealed installation wall-mounted

Required parts:		Code no.
	Basic set for single lever basin mixer for concealed installation wall-mounted	13622180

Talis E Single lever basin mixer with bidette hand shower and shower hose 160 cm

Features

- consists of: single lever basin mixer, bidette hand shower, shower holder, shower hose, waste set
- ComfortZone: 80
- projection: 96 mm
- spout height: 71 mm
- handle variant: lever handle
- maximum flow rate at 3 bar: 5,7 l/min
- ceramic cartridge
- temperature limitation adjustable
- suitable for continuous flow water heaters
- push-open waste set G 1¼
- material waste set: metal
- connection type: G ⅜ hose connections
- connection dimension: DN15
- EU taxonomy: max. 6 l/min - Substantial Contribution (SC) possible

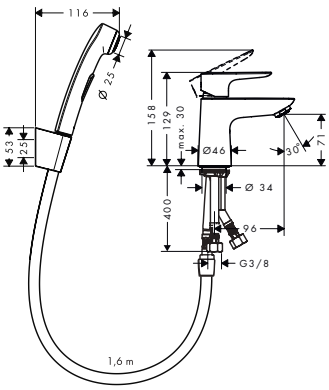

Sustainability

Technologies

Certificates/declarations

Finish	Code no.
Chrome	71729000

Talis E Single lever bidet mixers

Features of all variants

- consists of: single lever bidet mixer, waste set
- projection: 116 mm
- spout height: 78 mm
- aerator with ball pivot
- spray type: normal spray
- maximum flow rate at 3 bar: 5 l/min
- ceramic cartridge
- temperature limitation adjustable
- suitable for continous flow water heaters
- material waste set: metal
- connection type: G ⅜ hose connections
- connection dimension: DN15
- EU taxonomy: max. 6 l/min - Substantial Contribution (SC) possible

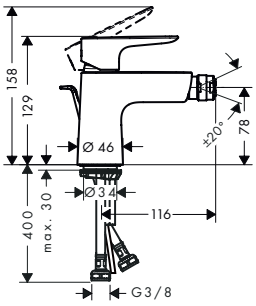

Sustainability

Technologies

Certificates/declarations

Overview variants

	Waste set	Finish	Code no.
	pop-up	Chrome	71720000
		Brushed Bronze	71720140
		Brushed Black Chrome	71720340
		Matt Black	71720670
		Matt White	71720700
		Polished Gold Optic	71720990
	push-open	Chrome	71721000

Measurements within scale drawings are in mm.
Technical specifications and units of measure are subject to change.

Talis E Single lever bath mixer for exposed installation

Features

- 2 functions
- projection: 194 mm
- centre distance: 150 ± 12 mm
- spray type mixer: normal spray
- maximum flow rate at 3 bar: 19,2 l/min
- flow rate for bath spout at 3 bar: 19,2 l/min
- flow rate of hand shower at 3 bar: 16,8 l/min
- ceramic cartridge
- temperature limitation adjustable
- diverter with automatic resetting
- with silencer
- suitable for continous flow water heaters
- connection dimension: DN15
- connection type: S-connections
- wall-mounted

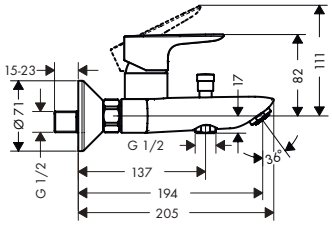

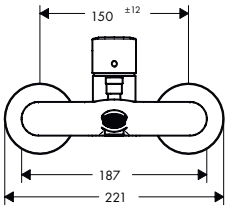

Technologies

Quick Clean | AirPower

Certificates/declarations

EPD

Finish	Code no.
Chrome	71740000
Brushed Bronze	71740140
Brushed Black Chrome	71740340
Matt Black	71740670
Matt White	71740700
Polished Gold Optic	71740990

Talis E Single lever bath mixers for concealed installation for iBox universal

Features of all variants

- 2 functions
- ceramic cartridge
- temperature limitation adjustable
- diverter with automatic resetting
- with silencer
- connection type: basic set
- wall-mounted
- min. operating pressure: 1 bar
- max. operating pressure: 10 bar

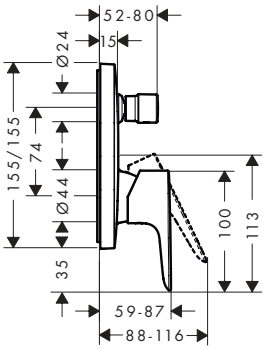

Certificates/declarations

EPD

Overview variants

Security combination EN 1717	Max. flow rate at 3 bar (l/min)	Finish	Code no.
–	29	Chrome	71745000
		Brushed Bronze	71745140
		Brushed Black Chrome	71745340
		Matt Black	71745670
		Matt White	71745700
		Polished Gold Optic	71745990

Measurements within scale drawings are in mm.
Technical specifications and units of measure are subject to change.

Talis E Single lever bath mixers for concealed installation for iBox universal

Overview variants

Security combination EN 1717	Max. flow rate at 3 bar (l/min)	Finish	Code no.
■	25	Chrome	71474000
		Brushed Bronze	71474140
		Brushed Black Chrome	71474340
		Matt Black	71474670
		Matt White	71474700
		Polished Gold Optic	71474990

Required parts (choose one):			Code no.
Option 1		iBox universal 2 Basic set	01500180
+		Adapter plate for iBox universal 2	13588000
Option 2		iBox universal Basic set	01800180

Talis E Single lever bath mixer for concealed installation

Features

- 2 functions
- maximum flow rate at 3 bar: 30,7 l/min
- flow rate for bath spout at 3 bar: 30,7 l/min
- flow rate of hand shower at 3 bar: 27 l/min
- ceramic cartridge
- temperature limitation adjustable
- diverter with automatic resetting
- connection type: basic set
- wall-mounted
- min. operating pressure: 1 bar
- max. operating pressure: 10 bar

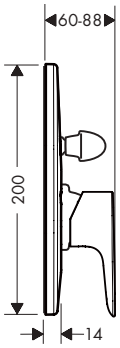

Finish	Code no.
Chrome	71746000

Required parts:		Code no.
	Basic set for single lever bath mixer for concealed installation	31741180

Logis Bath spout

Features

- 1 function
- connection type: G ¾
- with escutcheon
- projection: 195 mm
- wall-mounted
- maximum flow rate at 3 bar: 21 l/min
- connection dimension: DN20
- spray type: normal spray

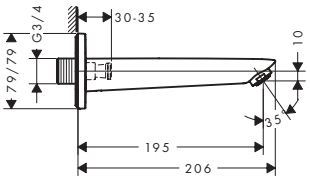

Technologies

AirPower

Certificates/declarations

EPD

Finish	Code no.
Chrome	71410000
Matt Black	71410670

Optional parts:	Code no.
Socket for G1/2 connection	95626000

Talis E 3-hole rim mounted bath mixer

Features

- projection: 196 mm
- ceramic cartridge
- non-return valve
- with silencer
- installation on bath rim

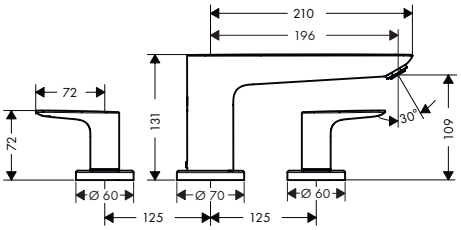

Technologies

Quick Clean

AirPower

Finish	Code no.
Chrome	71747000

Required parts:	Code no.
Basic set for 3-hole rim mounted bath mixer	13233180

Measurements within scale drawings are in mm.
Technical specifications and units of measure are subject to change.

Talis E 3-hole rim mounted single lever bath mixer for Secuflex

Features

- consists of: 3-hole rim mounted single lever bath mixer, hand shower, shower holder
- 2 functions
- projection: 196 mm
- spray type mixer: normal spray
- spray type hand shower: Rain
- maximum pull-out length of hand shower: 1.10 m
- maximum flow rate at 3 bar: 18 l/min
- flow rate for bath spout at 3 bar: 18 l/min
- flow rate of hand shower at 3 bar: 15 l/min
- ceramic cartridge
- temperature limitation adjustable
- diverter with automatic resetting
- non-return valve
- connection dimension: DN15
- connection type: basic set
- installation on bath rim
- min. operating pressure: 1 bar
- max. operating pressure: 10 bar

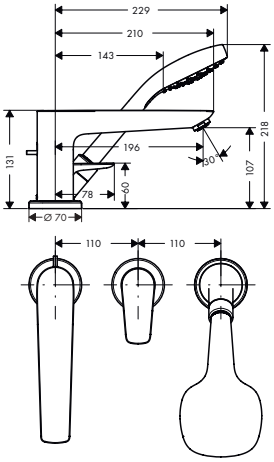

Technologies

Spray types

Finish	Code no.
Chrome	71730000

Required parts:	Code no.
Basic set for 3-hole rim mounted single lever bath mixer	13437180

Talis E 3-hole rim mounted single lever bath mixer

Features

- consists of: 3-hole rim mounted single lever bath mixer, hand shower
- 2 functions
- projection: 196 mm
- spray type mixer: normal spray
- spray type hand shower: Rain
- maximum pull-out length of hand shower: 1.60 m
- maximum flow rate at 3 bar: 19 l/min
- flow rate for bath spout at 3 bar: 19 l/min
- flow rate of hand shower at 3 bar: 15 l/min
- ceramic cartridge
- temperature limitation adjustable
- diverter with automatic resetting
- non-return valve
- suitable for continous flow water heaters
- connection dimension: DN15
- installation on bath rim
- min. operating pressure: 1 bar
- max. operating pressure: 10 bar

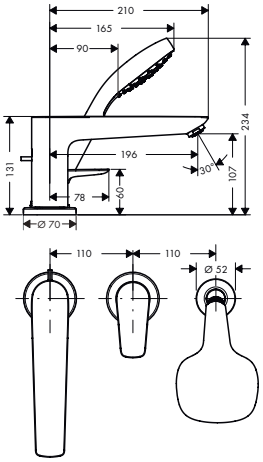

Technologies

Spray types

Finish	Code no.
Chrome	71731000

Required parts:	Code no.
Basic set for 3-hole rim mounted single lever bath mixer	13439180

Talis E 4-hole rim mounted bath mixer

Features

- consists of: 4-hole rim mounted bath mixer, hand shower
- 2 functions
- projection: 196 mm
- maximum pull-out length of hand shower: 1.60 m
- maximum flow rate at 3 bar: 23,8 l/min
- flow rate for bath spout at 3 bar: 23,8 l/min
- flow rate of hand shower at 3 bar: 16,7 l/min
- non-return valve
- connection dimension: DN15
- installation on bath rim
- min. operating pressure: 1 bar

Technologies

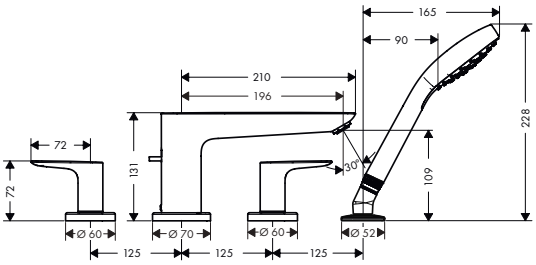

Finish	Code no.
Chrome	71748000
Brushed Bronze	71748140
Brushed Black Chrome	71748340
Matt Black	71748670
Matt White	71748700
Polished Gold Optic	71748990

Required parts:	Code no.
Basic set for 4-hole rim mounted bath mixer	13244180

Talis E Single lever shower mixers for exposed installation

Features of all variants

- 1 function
- ceramic cartridge
- temperature limitation adjustable
- non-return valve
- with silencer
- hose connection DN15
- connection dimension: DN15

Certificates/declarations

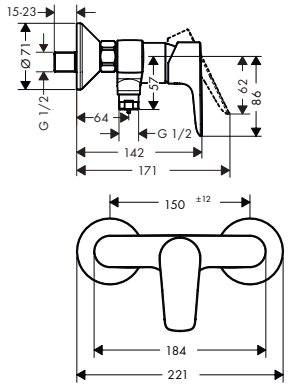

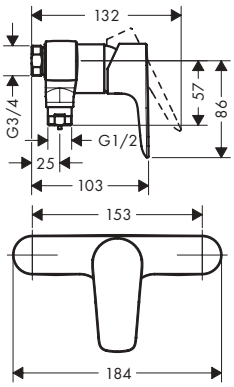

Measurements within scale drawings are in mm.
Technical specifications and units of measure are subject to change.

Talis E Single lever shower mixers for exposed installation

Overview variants

Centre distance (mm)	Finish	Code no.
150 ± 12	Chrome	71760000
	Brushed Bronze	71760140
	Brushed Black Chrome	71760340
	Matt Black	71760670
	Matt White	71760700
	Polished Gold Optic	71760990
153	Chrome	71761000

Talis E Single lever shower mixer for concealed installation for iBox universal

Features

- 1 function
- maximum flow rate at 3 bar: 29,3 l/min
- ceramic cartridge
- temperature limitation adjustable
- connection type: basic set

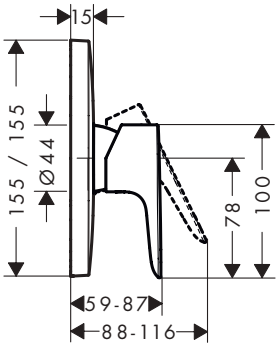

Certificates/declarations

Finish	Code no.
Chrome	71765000
Brushed Bronze	71765140
Brushed Black Chrome	71765340
Matt Black	71765670
Matt White	71765700
Polished Gold Optic	71765990

Required parts (choose one):			Code no.
Option 1		iBox universal 2 Basic set	01500180
	+	Adapter plate for iBox universal 2	13588000
Option 2		iBox universal Basic set	01800180

Talis E Single lever shower mixer HighFlow for concealed installation for iBox universal

Features

- 1 function
- maximum flow rate at 3 bar: 47 l/min
- ceramic cartridge (Highflow)
- temperature limitation adjustable
- min. operating pressure: 1 bar
- max. operating pressure: 10 bar
- connection type: basic set

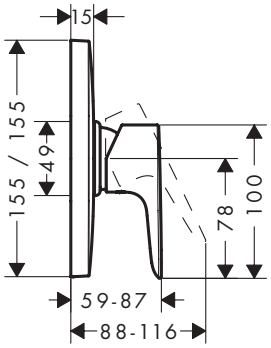

Finish	Code no.
Chrome	71768000

Required parts (choose one):			Code no.
Option 1		iBox universal 2 Basic set	01500180
	+	Adapter plate for iBox universal 2	13588000
Option 2		iBox universal Basic set	01800180

Talis E Single lever shower mixers for concealed installation

Features of all variants

- 1 function
- maximum flow rate at 3 bar: 28,7 l/min
- min. operating pressure: 1 bar
- max. operating pressure: 10 bar
- connection type: basic set

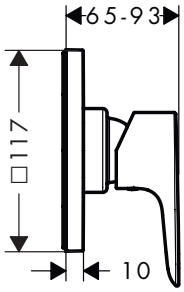

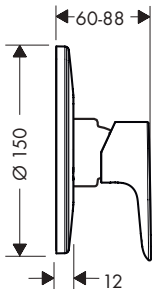

Certificates/declarations

EPD

Overview variants

	Shape	Finish	Code no.
	softcube	Chrome	71764000
		Matt Black	71764670
	round	Chrome	71766000

Required parts:		Code no.
	Basic set for single lever shower mixer for concealed installation	13620180

Measurements within scale drawings are in mm.
Technical specifications and units of measure are subject to change.

Focus

Focus Single lever basin mixers

Features of all variants

- handle variant: lever handle
- spray type: normal spray
- maximum flow rate at 3 bar: 5 l/min
- ceramic cartridge
- temperature limitation adjustable
- suitable for continuous flow water heaters
- connection type: G ⅜ hose connections
- connection dimension: DN15
- EU taxonomy: max. 6 l/min - Substantial Contribution (SC) possible

70

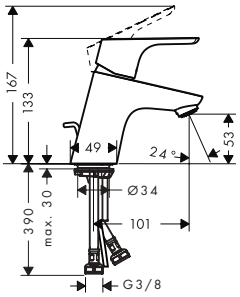

100

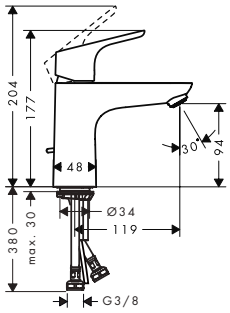

190

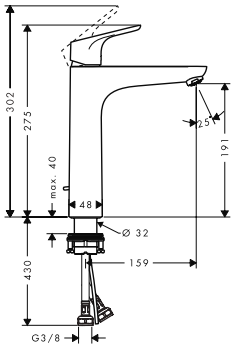

230

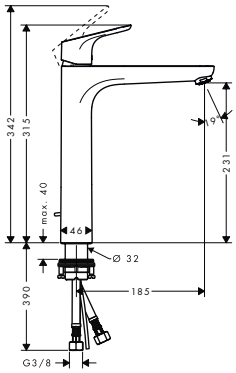

Sustainability

CoolStart, EcoSmart

Technologies

Quick Clean, AirPower, Comfort Zone

Certificates/declarations

EPD

Overview variants

ComfortZone	Projection (mm)	Spout height (mm)	Waste set	Material waste set	CoolStart	For wash bowls	Finish	Code no.
70	101	53	pop-up	metal	■	–	Chrome	31539000
70	101	53	pop-up	metal	–	–	Chrome	31730000
70	101	53	push-open	synthetic	–	–	Chrome	31604000
70	101	53	chain	–	–	–	Chrome	31732000
70	101	53	without	–	–	–	Chrome	31733000
100	119	94	pop-up	metal	■	–	Chrome	31621000
100	119	94	without	–	■	–	Chrome	31509000
100	119	94	pop-up	metal	–	–	Chrome	31607000
100	119	94	without	–	–	–	Chrome	31517000
190	159	191	pop-up	metal	–	–	Chrome	31608000
190	159	191	without	–	–	–	Chrome	31518000
230	185	231	pop-up	metal	–	■	Chrome	31531000
230	185	231	without	–	–	■	Chrome	31532000

Measurements within scale drawings are in mm.
Technical specifications and units of measure are subject to change.

Focus Single lever basin mixers LowFlow

Features of all variants

- handle variant: lever handle
- spray type: normal spray
- maximum flow rate at 3 bar: 3,5 l/min
- ceramic cartridge
- temperature limitation adjustable
- suitable for continuous flow water heaters
- connection type: G ⅜ hose connections
- connection dimension: DN15
- EU taxonomy: max. 6 l/min - Substantial Contribution (SC) possible

70

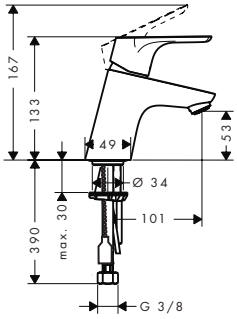

100

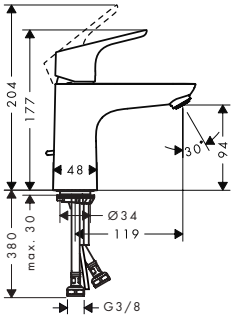

Sustainability

EcoSmart

Technologies

Quick Clean · AirPower · Comfort Zone

Certificates/declarations

EPD

Overview variants

ComfortZone	Projection (mm)	Spout height (mm)	Waste set	Material waste set	Finish	Code no.
70	101	53	without	–	Chrome	31952000
100	119	94	pop-up	metal	Chrome	31603000
100	119	94	without	–	Chrome	31513000

Focus Single lever basin mixer 70 for LowPressure/vented hot water cylinders with pop-up waste set

Features

- consists of: single lever basin mixer, waste set
- ComfortZone: 70
- projection: 101 mm
- spout height: 53 mm
- handle variant: lever handle
- spray type: laminar spray
- maximum flow rate at 3 bar: 5 l/min
- ceramic cartridge
- temperature limitation adjustable
- pop-up waste set G 1¼
- material waste set: metal
- connection type: G ⅜ hose connections
- connection dimension: DN15
- EU taxonomy: max. 6 l/min - Substantial Contribution (SC) possible

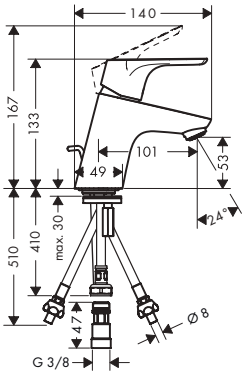

Technologies

Comfort Zone · Low Pressure

Certificates/declarations

EPD

Finish	Code no.
Chrome	31132000

Focus Single lever basin mixers with 2 flow rates

Features of all variants

- consists of: single lever basin mixer, waste set
- handle variant: lever handle
- spray type: normal spray
- maximum flow rate at 3 bar: 10,5 l/min
- ceramic cartridge with Eco handle position for 2 flow rates
- temperature limitation adjustable
- suitable for continuous flow water heaters
- pop-up waste set G 1¼
- material waste set: metal
- connection type: G ⅜ hose connections
- connection dimension: DN15
- cold water in basic handle position

100

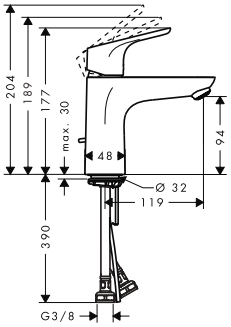

190

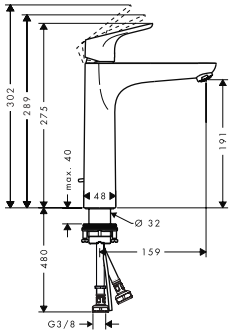

Sustainability

Technologies

Certificates/declarations

Overview variants

ComfortZone	Projection (mm)	Spout height (mm)	Finish	Code no.
100	119	94	Chrome	31657000
190	159	191	Chrome	31658000

Focus Single lever basin mixers with extra long handle

Features of all variants

- larger print for greater clarity
- with extra long barrier-free handle
- handle variant: lever handle
- spray type: laminar spray
- maximum flow rate at 3 bar: 5 l/min
- ceramic cartridge
- temperature limitation adjustable
- suitable for continuous flow water heaters
- connection type: G ⅜ hose connections
- connection dimension: DN15
- EU taxonomy: max. 6 l/min - Substantial Contribution (SC) possible

70

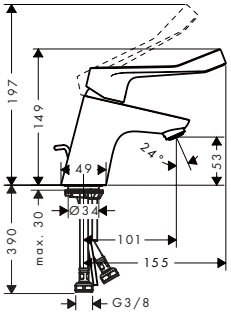

100

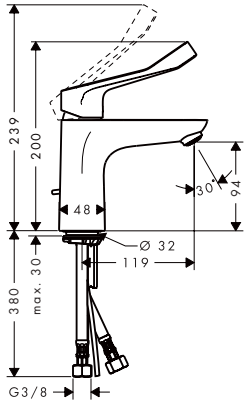

Sustainability

Technologies

Certificates/declarations

Overview variants

ComfortZone	Projection (mm)	Spout height (mm)	Waste set	Material waste set	CoolStart	Finish	Code no.
70	101	53	pop-up	metal	–	Chrome	31910000
70	101	53	without	–	–	Chrome	31914000
100	119	94	without	–	■	Chrome	31917000
100	119	94	pop-up	metal	–	Chrome	31911000
100	119	94	without	–	–	Chrome	31915000

Measurements within scale drawings are in mm.
Technical specifications and units of measure are subject to change.

Focus Single lever basin mixers with swivel spout

Features of all variants

- ComfortZone: 240
- projection: 160 mm
- spout height: 236 mm
- handle variant: lever handle
- swivel range 120°
- spray type: normal spray
- maximum flow rate at 3 bar: 5 l/min
- ceramic cartridge
- temperature limitation adjustable
- suitable for continuous flow water heaters
- connection type: G ⅜ hose connections
- connection dimension: DN15
- handle position on the side: bottom-side at the base body (not suitable for wash bowls)
- EU taxonomy: max. 6 l/min - Substantial Contribution (SC) possible

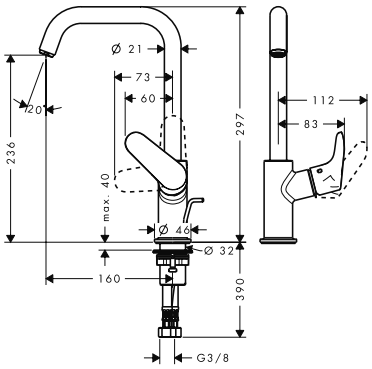

Sustainability

Technologies

Certificates/declarations

Overview variants

ComfortZone	Projection (mm)	Spout height (mm)	Waste set	Material waste set	Finish	Code no.
240	160	236	pop-up	metal	Chrome	31609000
240	160	236	without	–	Chrome	31519000

Focus Pillar tap 70 with lever handle for cold water or pre-adjusted water without waste set

Features

- ComfortZone: 70
- projection: 101 mm
- spout height: 53 mm
- handle variant: lever handle
- spray type: normal spray
- maximum flow rate at 3 bar: 5 l/min
- ceramic cartridge
- for cold water connection
- connection type: G ⅜ hose connection
- connection dimension: DN15
- EU taxonomy: max. 6 l/min - Substantial Contribution (SC) possible

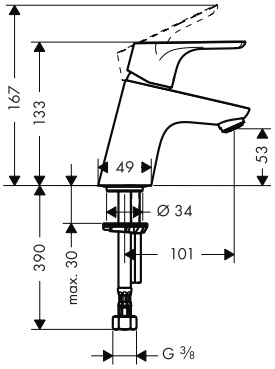

Sustainability

Technologies

Certificates/declarations

Finish	Code no.
Chrome	31130000

Focus 3-hole basin mixer 100 with pop-up waste set

Features

- consists of: 3-hole basin mixer, waste set
- ComfortZone: 100
- spout height: 93 mm
- handle variant: lever handle
- maximum flow rate at 3 bar: 5 l/min
- ceramic valves hot/cold 90°
- suitable for continuous flow water heaters
- pop-up waste set G 1¼
- material waste set: metal
- connection type: G ⅜ hose connections
- connection dimension: DN15
- EU taxonomy: max. 6 l/min - Substantial Contribution (SC) possible

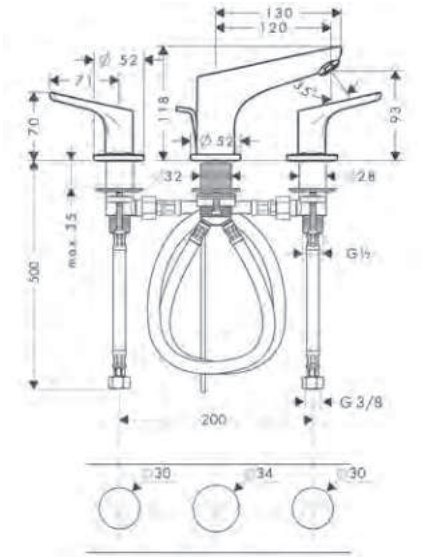

Sustainability

Technologies

Finish	Code no.
Chrome	31937000

Focus Single lever basin mixer for exposed installation wall-mounted

Features

- projection: 180 mm
- handle variant: lever handle
- centre distance: 150 ± 12 mm
- spray type: normal spray
- maximum flow rate at 3 bar: 5 l/min
- ceramic cartridge
- temperature limitation adjustable
- with noise reduction
- suitable for continuous flow water heaters
- connection type: S-connections
- connection dimension: DN15
- EU taxonomy: max. 6 l/min - Substantial Contribution (SC) possible

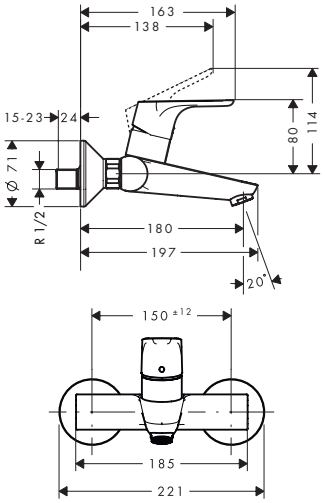

Sustainability

Technologies

Certificates/declarations

Finish	Code no.
Chrome	31923000

Measurements within scale drawings are in mm.
Technical specifications and units of measure are subject to change.

Focus Single lever basin mixer for exposed installation with extra long handle 12,1 cm

Features

- projection: 180 mm
- larger print for greater clarity
- with extra long barrier-free handle
- handle variant: lever handle
- centre distance: 150 ± 12 mm
- spray type: laminar spray
- maximum flow rate at 3 bar: 5 l/min
- ceramic cartridge
- temperature limitation adjustable
- with noise reduction
- suitable for continuous flow water heaters
- connection type: S-connections
- connection dimension: DN15
- EU taxonomy: max. 6 l/min - Substantial Contribution (SC) possible

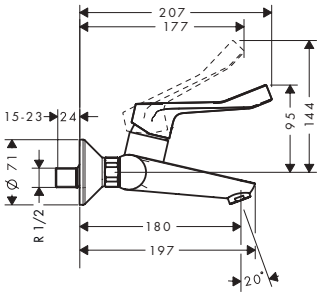

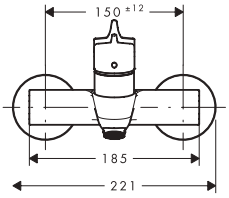

Sustainability

EcoSmart

Finish	Code no.
Chrome	31913000

Focus Electronic basin mixers

Features of all variants

- ComfortZone 130
- projection: 127 mm
- spray type: normal spray
- maximum flow rate at 3 bar: 5 l/min
- temperature limitation adjustable
- non-return valve
- suitable for continous flow water heaters
- infrared sensor technology
- automatic environmental adjustment of infrared sensor
- adjustable optical range of infrared sensor (2 settings)
- running time: 10 s
- hygiene rinse activatable (automatic water flow)
- frequency of hygiene rinse: 24 h
- flushing time hygiene rinse: 10 s
- permanent rinse activatable (single water flow for 180 seconds, suitable for thermal disinfection)
- cleaning mode: manual water stop for washbasin cleaning
- connection dimension: DN15
- TÜV certified
- dirt filters in the connection hoses

pre adjustable

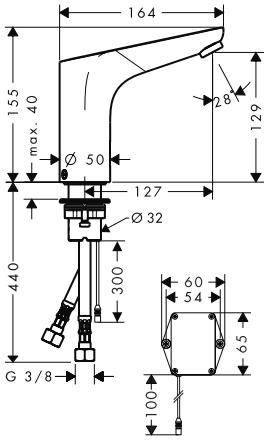

adjustable

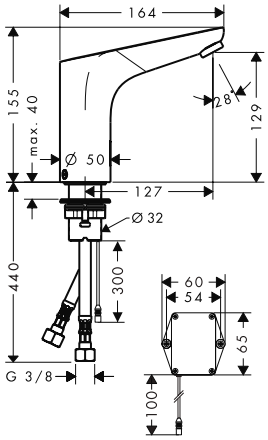

Sustainability

EcoSmart

Technologies

AirPower | Comfort Zone | Sensor Activation

Certificates/declarations

EPD

Overview variants

Power supply	Temperature adjustment	Finish	Code no.
battery operation	pre adjustable	Chrome	31172000
battery operation	adjustable	Chrome	31171000
mains connection	pre adjustable	Chrome	31174000
mains connection	adjustable	Chrome	31173000

Measurements within scale drawings are in mm.
Technical specifications and units of measure are subject to change.

Focus Single lever basin mixers with bidette hand shower and shower hose 160 cm

Features of all variants

- handle variant: lever handle
- maximum flow rate at 3 bar: 5 l/min
- ceramic cartridge
- temperature limitation adjustable
- suitable for continuous flow water heaters
- connection type: G ⅜ hose connections
- connection dimension: DN15
- EU taxonomy: max. 6 l/min - Substantial Contribution (SC) possible

70

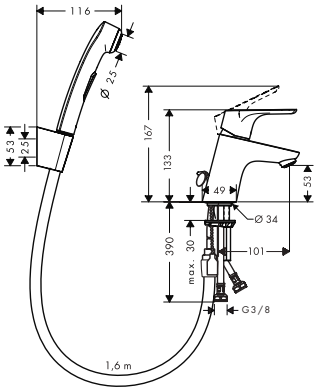

100

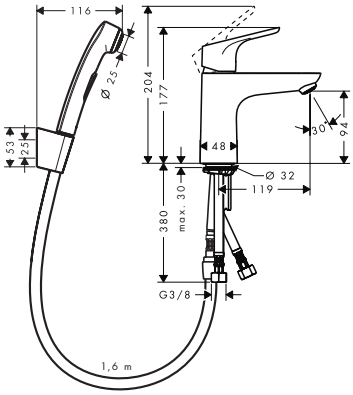

Sustainability

EcoSmart

Technologies

Quick Clean | AirPower | Comfort Zone

Certificates/declarations

EPD

Overview variants

ComfortZone	Projection (mm)	Spout height (mm)	Finish	Code no.
70	101	53	Chrome	31926000
100	119	94	Chrome	31927000

Focus Single lever bidet mixers

Features of all variants

- consists of: single lever bidet mixer, waste set
- projection: 126 mm
- spout height: 54 mm
- aerator with ball pivot
- spray type: normal spray
- maximum flow rate at 3 bar: 7,2 l/min
- ceramic cartridge
- temperature limitation adjustable
- suitable for continous flow water heaters
- material waste set: metal
- connection type: G ⅜ hose connections
- connection dimension: DN15

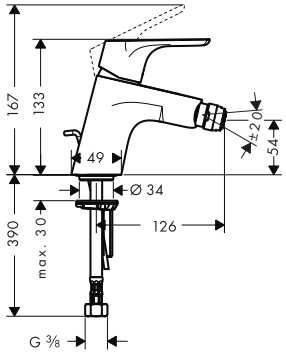

Technologies

Quick Clean | AirPower

Certificates/declarations

EPD

Overview variants

	Waste set	Finish	Code no.
	pop-up	Chrome	31920000
	push-open	Chrome	31922000

Measurements within scale drawings are in mm.
Technical specifications and units of measure are subject to change.

Focus Single lever bidet mixer with 2 flow rates with pop-up waste set

Features

- consists of: single lever bidet mixer, waste set
- projection: 126 mm
- spout height: 54 mm
- aerator with ball pivot
- spray type: normal spray
- maximum flow rate at 3 bar: 8,3 l/min
- ceramic cartridge with Eco handle position for 2 flow rates
- temperature limitation adjustable
- suitable for continous flow water heaters
- material waste set: metal
- connection type: G ⅜ hose connections
- connection dimension: DN15

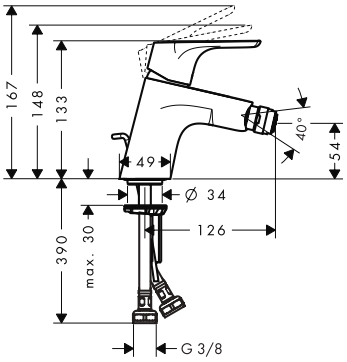

Sustainability

Eco Selection

Technologies

Quick Clean
AirPower

Certificates/declarations

EPD

Finish	Code no.
Chrome	31928000

Focus Single lever bath mixer for exposed installation

Features

- 2 functions
- projection: 180 mm
- centre distance: 150 ± 12 mm
- spray type mixer: normal spray
- maximum flow rate at 3 bar: 19,8 l/min
- flow rate for bath spout at 3 bar: 19,8 l/min
- flow rate of hand shower at 3 bar: 15,4 l/min
- ceramic cartridge
- temperature limitation adjustable
- diverter with automatic resetting
- protected against backflow, according to DIN EN 1717
- with silencer
- suitable for continous flow water heaters
- connection dimension: DN15
- connection type: S-connections
- wall-mounted
- min. operating pressure: 1 bar
- max. operating pressure: 10 bar

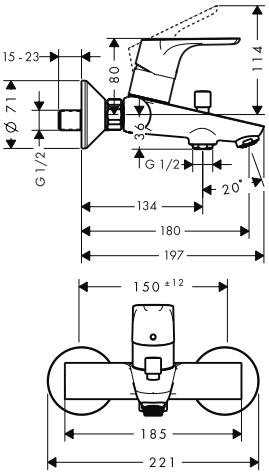

Technologies

Quick Clean
AirPower

Certificates/declarations

EPD

Finish	Code no.
Chrome	31940000

Measurements within scale drawings are in mm.
Technical specifications and units of measure are subject to change.

Focus Single lever bath mixer for exposed installation with 2 flow rates

Features

- 2 functions
- projection: 172 - 179.5 mm
- centre distance: 150 ± 12 mm
- spray type mixer: normal spray
- maximum flow rate at 3 bar: 22 l/min
- ceramic cartridge with Eco handle position for 2 flow rates
- temperature limitation adjustable
- diverter with automatic resetting
- protected against backflow, according to DIN EN 1717
- with silencer
- suitable for continous flow water heaters
- connection dimension: DN15
- connection type: S-connections
- wall-mounted
- no additional maintenance opening required

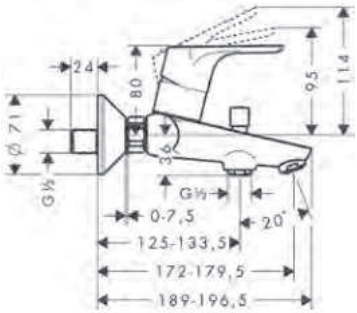

Sustainability

Technologies

Certificates/declarations

Finish	Code no.
Chrome	31948000

Focus Single lever bath mixers for concealed installation for iBox universal

Features of all variants

- 2 functions
- ceramic cartridge
- temperature limitation adjustable
- diverter with automatic resetting
- with silencer
- connection type: basic set
- wall-mounted
- min. operating pressure: 1 bar
- max. operating pressure: 10 bar

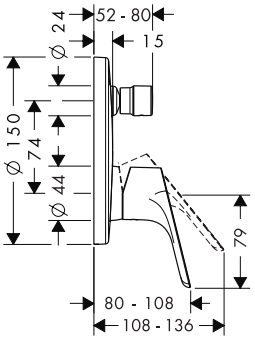

Certificates/declarations

Overview variants

Security combination EN 1717	Max. flow rate at 3 bar (l/min)	Finish	Code no.
–	29	Chrome	31945000
■	25	Chrome	31946000

Required parts (choose one):			Code no.
Option 1		iBox universal 2 Basic set	01500180
	+	Adapter plate for iBox universal 2	13588000
Option 2		iBox universal Basic set	01800180

Measurements within scale drawings are in mm.
Technical specifications and units of measure are subject to change.

Focus Single lever bath mixer for concealed installation

Features

- 2 functions
- maximum flow rate at 3 bar: 30,7 l/min
- flow rate for bath spout at 3 bar: 30,7 l/min
- flow rate of hand shower at 3 bar: 27,4 l/min
- ceramic cartridge
- temperature limitation adjustable
- diverter with automatic resetting
- connection type: basic set
- wall-mounted
- min. operating pressure: 1 bar
- max. operating pressure: 10 bar

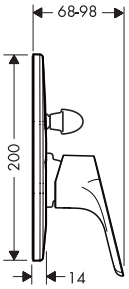

Certificates/declarations

Finish	Code no.
Chrome	31947000

Required parts:	Code no.
Basic set for single lever bath mixer for concealed installation	31741180

Focus Single lever bath and shower mixer Monotrou

Features

- 2 functions
- projection: 130 mm
- spray type mixer: normal spray
- maximum flow rate at 3 bar: 20 l/min
- ceramic cartridge
- temperature limitation adjustable
- diverter with automatic resetting
- protected against backflow, according to DIN EN 1717
- suitable for continous flow water heaters
- connection dimension: DN15
- connection type: G ⅜ hose connections
- installation on bath rim
- min. operating pressure: 1 bar
- max. operating pressure: 10 bar

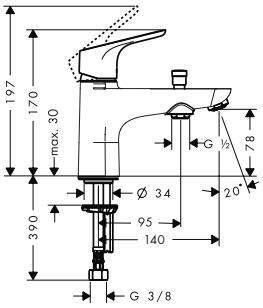

Technologies

Finish	Code no.
Chrome	31930000

Focus Single lever bath and shower mixer Monotrou with 2 flow rates

Features

- 2 functions
- projection: 130 mm
- spray type mixer: normal spray
- maximum flow rate at 3 bar: 20 l/min
- ceramic cartridge with Eco handle position for 2 flow rates
- temperature limitation adjustable
- diverter with automatic resetting
- protected against backflow, according to DIN EN 1717
- suitable for continous flow water heaters
- connection dimension: DN15
- connection type: G ⅜ hose connections
- installation on bath rim

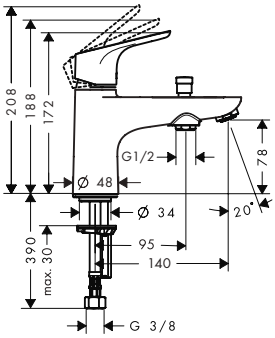

Sustainability

Technologies

Certificates/declarations

Finish	Code no.
Chrome	31938000

Focus Single lever bath mixer Monotrou

Features

- 1 function
- projection: 130 mm
- spray type mixer: normal spray
- maximum flow rate at 3 bar: 20 l/min
- ceramic cartridge
- temperature limitation adjustable
- suitable for continous flow water heaters
- connection dimension: DN15
- connection type: G ⅜ hose connections
- installation on bath rim
- min. operating pressure: 1 bar
- max. operating pressure: 10 bar

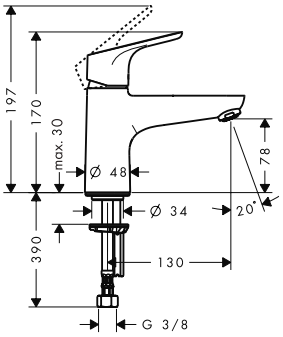

Technologies

Finish	Code no.
Chrome	31931000

Measurements within scale drawings are in mm.
Technical specifications and units of measure are subject to change.

Focus Single lever shower mixer for exposed installation

Features

- 1 function
- centre distance: 150 ± 12 mm
- maximum flow rate at 3 bar: 15 l/min
- flow rate of hand shower at 3 bar: 15 l/min
- ceramic cartridge
- temperature limitation adjustable
- non-return valve
- with silencer
- hose connection DN15
- connection dimension: DN15
- min. operating pressure: 1 bar
- max. operating pressure: 10 bar
- connection type: S-connections

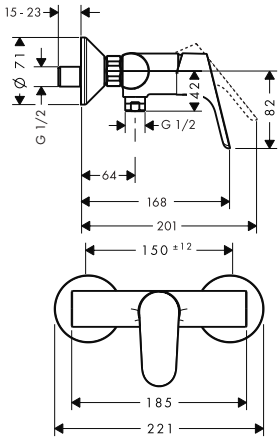

Certificates/declarations

Finish	Code no.
Chrome	31960000

Focus Single lever shower mixer for exposed installation with 2 flow rates

Features

- 1 function
- centre distance: 150 ± 12 mm
- maximum flow rate at 3 bar: 22 l/min
- ceramic cartridge with Eco handle position for a reduced flowrate by up to 50%
- temperature limitation adjustable
- non-return valve
- with silencer
- hose connection DN15
- connection dimension: DN15
- min. operating pressure: 1 bar
- max. operating pressure: 10 bar
- connection type: S-connections

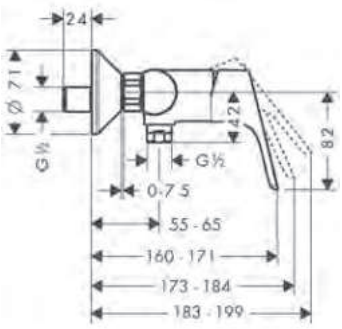

Sustainability

Certificates/declarations

Finish	Code no.
Chrome	31968000

Focus Single lever shower mixer for exposed installation with extra long handle 12,1 cm

Features

- larger print for greater clarity
- with extra long barrier-free handle
- 1 function
- centre distance: 150 ± 12 mm
- maximum flow rate at 3 bar: 28 l/min
- flow rate of hand shower at 3 bar: 17 l/min
- ceramic cartridge
- temperature limitation adjustable
- non-return valve
- with silencer
- hose connection DN15
- connection dimension: DN15
- connection type: S-connections

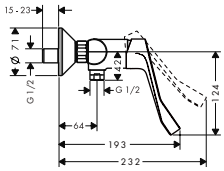

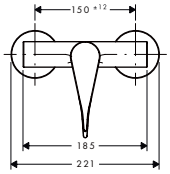

Finish	Code no.
Chrome	31916000

Long swivel spout 30 cm

Features

- with automatic resetting
- length 300 mm
- for installation on single lever shower mixer
- connection dimension: DN15

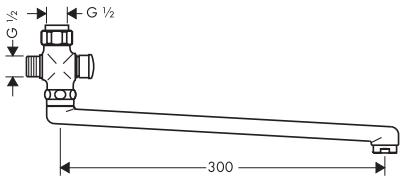

Finish	Code no.
Chrome	14495000

Focus Single lever shower mixer for concealed installation for iBox universal

Features

- 1 function
- maximum flow rate at 3 bar: 29,3 l/min
- ceramic cartridge
- temperature limitation adjustable
- min. operating pressure: 1 bar
- max. operating pressure: 10 bar
- connection type: basic set

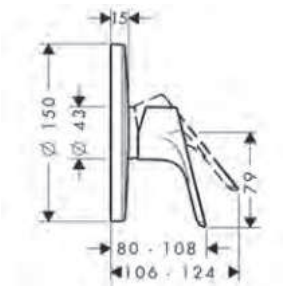

Certificates/declarations

EPD

Finish	Code no.
Chrome	31965000

Measurements within scale drawings are in mm.
Technical specifications and units of measure are subject to change.

Focus Single lever shower mixer for concealed installation for iBox universal

Required parts (choose one):			Code no.
Option 1		iBox universal 2 Basic set	01500180
+		Adapter plate for iBox universal 2	13588000
Option 2		iBox universal Basic set	01800180

Focus Single lever shower mixer HighFlow for concealed installation for iBox universal

Features

- 1 function
- maximum flow rate at 3 bar: 49 l/min
- ceramic cartridge (Highflow)
- temperature limitation adjustable
- connection dimension: DN15
- min. operating pressure: 1 bar
- max. operating pressure: 10 bar
- connection type: basic set

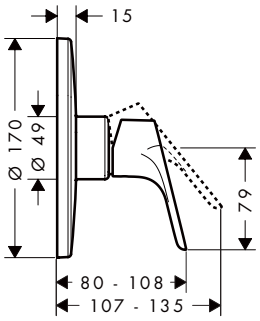

Finish	Code no.
Chrome	31964000

Required parts (choose one):			Code no.
Option 1		iBox universal 2 Basic set	01500180
+		Adapter plate for iBox universal 2	13588000
Option 2		iBox universal Basic set	01800180

Focus Single lever shower mixer for concealed installation

Features

- 1 function
- maximum flow rate at 3 bar: 28,7 l/min
- min. operating pressure: 1 bar
- max. operating pressure: 10 bar
- connection type: basic set

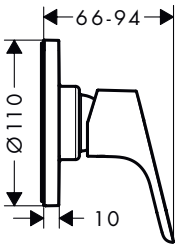

Certificates/declarations

Finish	Code no.
Chrome	31961000

Required parts:	Code no.
Basic set for single lever shower mixer for concealed installation	13620180

Measurements within scale drawings are in mm.
Technical specifications and units of measure are subject to change.

Rebris

Rebris S Single lever basin mixers

Features of all variants

- handle variant: lever handle
- spray type: normal spray
- ceramic cartridge
- temperature limitation adjustable
- suitable for continuous flow water heaters
- connection type: G ⅜ hose connections
- connection dimension: DN15
- aerator can be easily removed with the help of a coin and without tools
- EU taxonomy: max. 6 l/min - Substantial Contribution (SC) possible

80

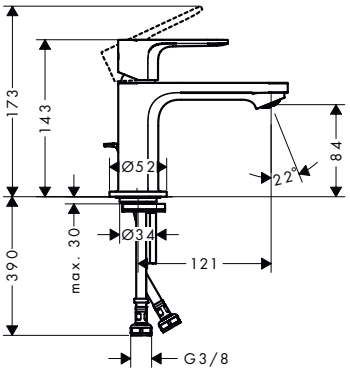

110

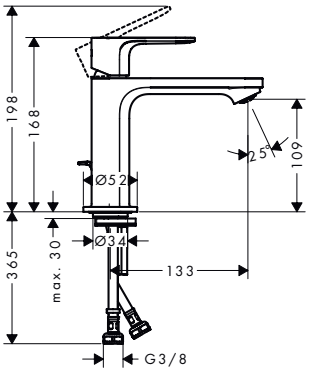

240

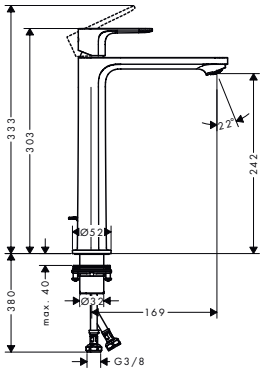

Sustainability

CoolStart | EcoSmart | Eco Smart+

Technologies

AirPower | Comfort Zone | Remove &Clean

Overview variants

Comfort-Zone	Projection (mm)	Spout height (mm)	Waste set	Material waste set	CoolStart	For wash bowls	Max. flow rate at 3 bar (l/min)	Finish	Code no.
80	121	84	pop-up	synthetic	■	–	4	Chrome	72586000
								Matt Black	72586670
80	121	84	pop-up	synthetic	■	–	5	Chrome	72513000
								Matt Black	72513670
80	121	84	pop-up	metal	■	–	5	Chrome	72584000
								Matt Black	72584670
80	121	84	without	–	■	–	5	Chrome	72514000
80	121	84	pop-up	synthetic	–	–	5	Chrome	72510000
110	133	109	pop-up	synthetic	■	–	4	Chrome	72588000
								Matt Black	72588670
110	133	109	pop-up	synthetic	■	–	5	Chrome	72519000
								Matt Black	72519670
110	133	109	pop-up	metal	■	–	5	Chrome	72527000
								Matt Black	72527670
110	133	109	without	–	■	–	5	Chrome	72520000
								Matt Black	72520670
110	133	109	pop-up	synthetic	–	–	5	Chrome	72517000
								Matt Black	72517670

Measurements within scale drawings are in mm.
Technical specifications and units of measure are subject to change.

Rebris S Single lever basin mixers

Overview variants

Comfort-Zone	Projection (mm)	Spout height (mm)	Waste set	Material waste set	CoolStart	For wash bowls	Max. flow rate at 3 bar (l/min)	Finish	Code no.
240	169	242	pop-up	synthetic	■	■	4	Chrome	72590000
								Matt Black	72590670
240	169	242	pop-up	synthetic	■	■	5	Chrome	72580000
								Matt Black	72580670
240	169	242	without	–	■	■	5	Chrome	72582000

Rebris S Single lever basin mixer 210 with swivel spout and pop-up waste set

Features

- consists of: single lever basin mixer, waste set
- ComfortZone: 210
- projection: 154 mm
- spout height: 222 mm
- handle variant: lever handle
- swivel range 120°
- spray type: normal spray
- maximum flow rate at 3 bar: 5 l/min
- ceramic cartridge
- temperature limitation adjustable
- suitable for continuous flow water heaters
- pop-up waste set G 1¼
- material waste set: synthetic
- connection type: G ⅜ hose connections
- connection dimension: DN15
- EU taxonomy: max. 6 l/min - Substantial Contribution (SC) possible

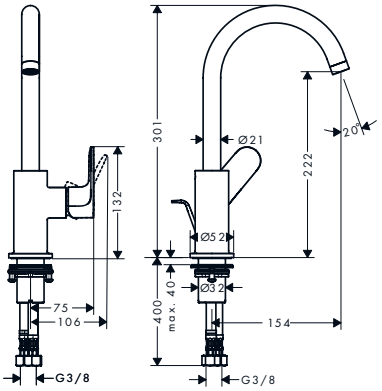

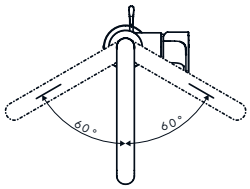

Sustainability

EcoSmart

Technologies

AirPower

Comfort Zone

Finish	Code no.
Chrome	72536000
Matt Black	72536670

Measurements within scale drawings are in mm.
Technical specifications and units of measure are subject to change.

Rebris S Pillar tap 80 with lever handle for cold water or pre-adjusted water without waste set

Features

- ComfortZone: 80
- projection: 121 mm
- spout height: 84 mm
- handle variant: lever handle
- spray type: normal spray
- maximum flow rate at 3 bar: 5 l/min
- ceramic cartridge
- for cold water connection
- connection type: G ⅜ hose connection
- connection dimension: DN15
- aerator can be easily removed with the help of a coin and without tools
- EU taxonomy: max. 6 l/min - Substantial Contribution (SC) possible

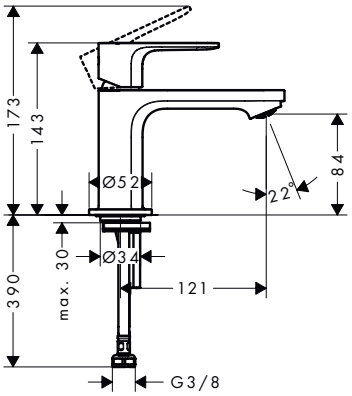

Sustainability

EcoSmart

Technologies

AirPower | Comfort Zone | Remove &Clean

Finish	Code no.
Chrome	72503000
Matt Black	72503670

Rebris S 3-hole basin mixer 110 with pop-up waste set

Features

- consists of: 3-hole basin mixer, waste set
- ComfortZone: 110
- projection: 134 mm
- spout height: 107 mm
- handle variant: lever handle
- spray type: normal spray
- maximum flow rate at 3 bar: 5 l/min
- ceramic valves hot/cold 90°
- suitable for continuous flow water heaters
- pop-up waste set G 1¼
- material waste set: synthetic
- connection type: G ⅜ hose connections
- connection dimension: DN15
- EU taxonomy: max. 6 l/min - Substantial Contribution (SC) possible

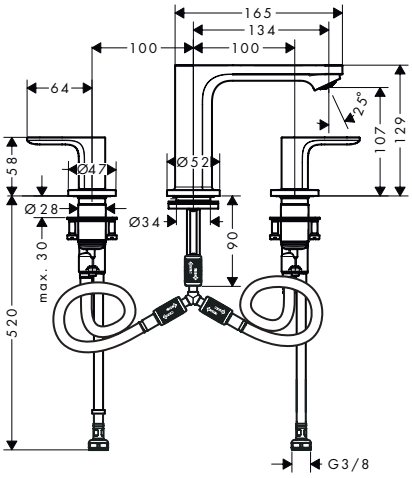

Sustainability

EcoSmart

Technologies

AirPower | Comfort Zone

Finish	Code no.
Chrome	72530000

Measurements within scale drawings are in mm.
Technical specifications and units of measure are subject to change.

Rebris S Single lever basin mixer for concealed installation wall-mounted with spout 20 cm

Features

- consists of: single lever basin mixer for concealed installation wall-mounted, waste set
- projection: 200 mm
- handle variant: lever handle
- spray type: normal spray
- maximum flow rate at 3 bar: 5 l/min
- ceramic cartridge
- temperature limitation adjustable
- suitable for continuous flow water heaters
- non-closing waste set
- material waste set: metal
- connection type: basic set
- connection dimension: DN15
- handle can be positioned on the right or left, depending on the basic set installation
- EU taxonomy: max. 6 l/min - Substantial Contribution (SC) possible

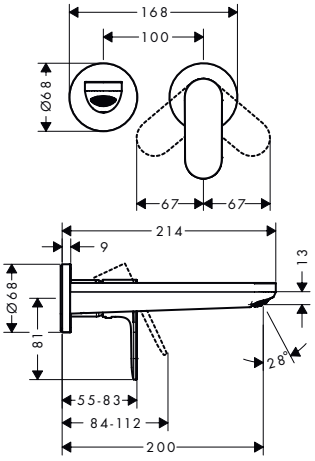

Sustainability

Technologies

Finish	Code no.
Chrome	72528000
Matt Black	72528670

Required parts:	Code no.
Basic set for single lever basin mixer for concealed installation wall-mounted	13622180

Rebris S Single lever basin mixer 110 with bidette hand shower and shower hose 160 cm without waste set

Features

- consists of: single lever basin mixer, bidette hand shower, shower holder, shower hose
- ComfortZone: 110
- projection: 133 mm
- spout height: 109 mm
- handle variant: lever handle
- spray type: normal spray
- maximum flow rate at 3 bar: 4,7 l/min
- ceramic cartridge
- temperature limitation adjustable
- suitable for continuous flow water heaters
- connection type: G ⅜ hose connections
- connection dimension: DN15
- aerator can be easily removed with the help of a coin and without tools
- EU taxonomy: max. 6 l/min - Substantial Contribution (SC) possible

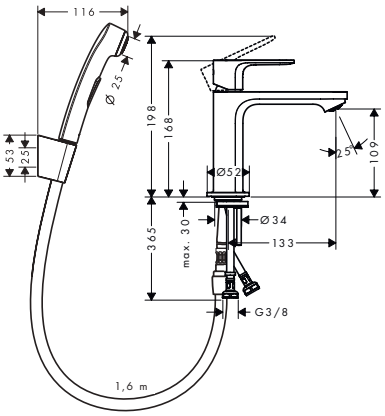

Sustainability

Technologies

Finish	Code no.
Chrome	72215000
Matt Black	72215670

Rebris S Single lever bidet mixers

Features of all variants

- consists of: single lever bidet mixer, waste set
- spout height: 89 mm
- aerator with ball pivot
- spray type: normal spray
- maximum flow rate at 3 bar: 5 l/min
- ceramic cartridge
- temperature limitation adjustable
- suitable for continous flow water heaters
- pop-up waste set G 1¼
- connection type: G ⅜ hose connections
- connection dimension: DN15
- EU taxonomy: max. 6 l/min - Substantial Contribution (SC) possible

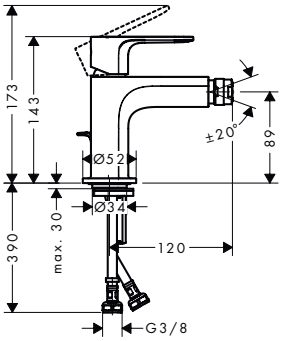

Sustainability

Technologies

Overview variants

Waste set	Material waste set	Finish	Code no.
pop-up	synthetic	Chrome	72210000
		Matt Black	72210670
pop-up	metal	Chrome	72212000
		Matt Black	72212670

Rebris S Single lever bath mixers for exposed installation

Features of all variants

- 2 functions
- spray type mixer: normal spray
- ceramic cartridge
- diverter with automatic resetting
- protected against backflow, according to DIN EN 1717
- with silencer
- suitable for continous flow water heaters
- wall-mounted
- min. operating pressure: 1 bar
- max. operating pressure: 10 bar

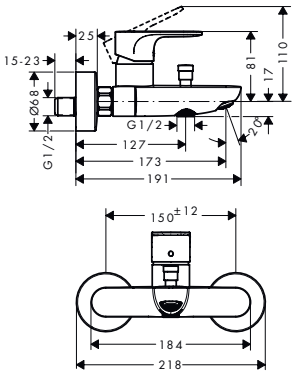

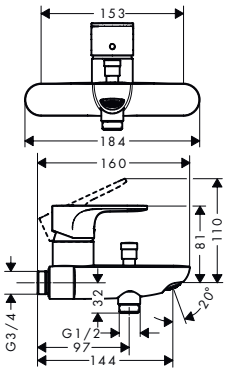

Technologies

Overview variants

Centre distance (mm)	Projection (mm)	Max. flow rate at 3 bar (l/min)	Finish	Code no.
150 ± 12	173	20.4	Chrome	72440000
			Matt Black	72440670
153	144	21	Chrome	72442000

Measurements within scale drawings are in mm.
Technical specifications and units of measure are subject to change.

Rebris S Single lever bath mixer for exposed installation with 2 flow rates

Features

- 2 functions
- projection: 173 mm
- centre distance: 150 ± 12 mm
- spray type mixer: normal spray
- maximum flow rate at 3 bar: 19,5 l/min
- flow rate for bath spout at 3 bar: 19,5 l/min
- flow rate of hand shower at 3 bar: 14,8 l/min
- ceramic cartridge
- diverter with automatic resetting
- protected against backflow, according to DIN EN 1717
- with silencer
- suitable for continous flow water heaters
- connection dimension: DN15
- connection type: S-connections
- wall-mounted
- min. operating pressure: 1 bar
- max. operating pressure: 10 bar
- no additional maintenance opening required

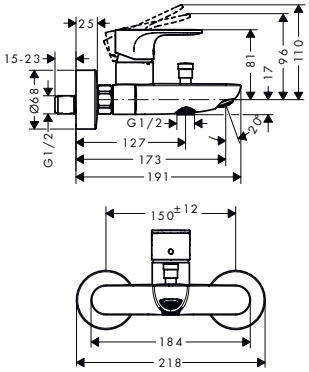

Sustainability

Technologies

Finish	Code no.
Chrome	72443000
Matt Black	72443670

Rebris S Single lever bath mixers for concealed installation for iBox universal

Features of all variants

- 2 functions
- ceramic cartridge
- temperature limitation adjustable
- diverter with automatic resetting
- with silencer
- connection type: basic set
- wall-mounted
- min. operating pressure: 1 bar
- max. operating pressure: 10 bar

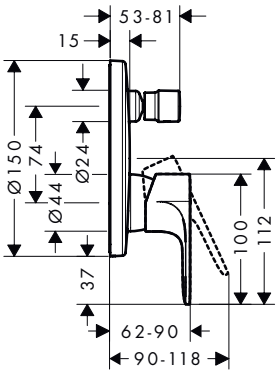

Overview variants

Security combination EN 1717	Max. flow rate at 3 bar (l/min)	Finish	Code no.
–	27.6	Chrome	72466000
		Matt Black	72466670
■	25.6	Chrome	72467000
		Matt Black	72467670

Measurements within scale drawings are in mm.
Technical specifications and units of measure are subject to change.

Rebris S Single lever bath mixer for concealed installation

Features

- 2 functions
- maximum flow rate at 3 bar: 30,7 l/min
- flow rate for bath spout at 3 bar: 30,7 l/min
- flow rate of hand shower at 3 bar: 27,4 l/min
- ceramic cartridge
- diverter with automatic resetting
- connection type: basic set
- wall-mounted
- min. operating pressure: 1 bar
- max. operating pressure: 10 bar

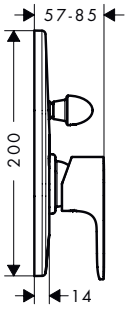

Finish	Code no.
Chrome	72449000
Matt Black	72449670

Required parts:	Code no.
Basic set for single lever bath mixer for concealed installation	31741180

Rebris S Single lever bath mixer set for concealed installation

Features

- consists of: Single lever bath mixer, basic set
- 2 functions
- maximum flow rate at 3 bar: 30,7 l/min
- flow rate for bath spout at 3 bar: 30,7 l/min
- flow rate of hand shower at 3 bar: 27,4 l/min
- ceramic cartridge
- temperature limitation adjustable
- diverter with automatic resetting
- connection type: basic set
- wall-mounted
- min. operating pressure: 1 bar
- max. operating pressure: 10 bar

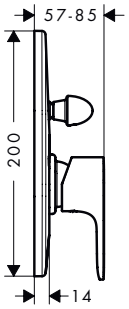

Finish	Code no.
Chrome	72448000
Matt Black	72448670

Rebris S Bath spout

Features

- connection type: G ½
- with escutcheon
- projection: 200 mm
- wall-mounted
- maximum flow rate at 3 bar: 22 l/min
- spray type: normal spray

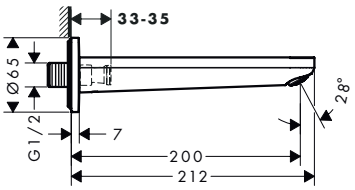

Technologies

AirPower

Finish	Code no.
Chrome	72430000
Matt Black	72430670

Measurements within scale drawings are in mm.
Technical specifications and units of measure are subject to change.

Rebris S Single lever bath and shower mixer Monotrou with 2 flow rates

Features

- 2 functions
- projection: 140 mm
- spray type mixer: normal spray
- maximum flow rate at 3 bar: 18,7 l/min
- flow rate for bath spout at 3 bar: 18,7 l/min
- flow rate of hand shower at 3 bar: 13,6 l/min
- ceramic cartridge with Eco handle position for 2 flow rates
- temperature limitation adjustable
- diverter with automatic resetting
- protected against backflow, according to DIN EN 1717
- connection dimension: DN15
- connection type: G ⅜ hose connections
- installation on bath rim
- min. operating pressure: 1 bar
- max. operating pressure: 10 bar
- no additional maintenance opening required

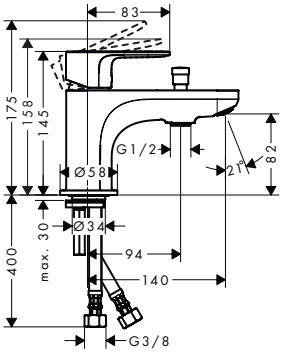

Sustainability

Eco Selection

Technologies

AirPower

Finish	Code no.
Chrome	72436000

Rebris S Single lever bath mixer Monotrou

Features

- 1 function
- projection: 140 mm
- spray type mixer: normal spray
- maximum flow rate at 3 bar: 19,9 l/min
- flow rate for bath spout at 3 bar: 19,9 l/min
- ceramic cartridge
- temperature limitation adjustable
- connection type: G ⅜ hose connections
- installation on bath rim
- min. operating pressure: 1 bar
- max. operating pressure: 10 bar

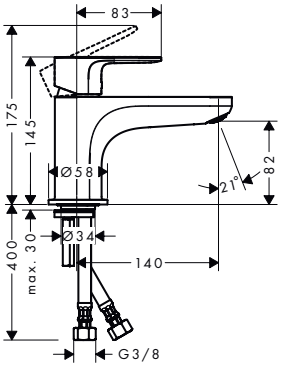

Technologies

AirPower

Finish	Code no.
Chrome	72434000

Rebris S Single lever shower mixers for exposed installation

Features of all variants

- 1 function
- ceramic cartridge
- temperature limitation adjustable
- non-return valve
- with silencer
- hose connection DN15
- connection dimension: DN15
- min. operating pressure: 1 bar
- max. operating pressure: 10 bar

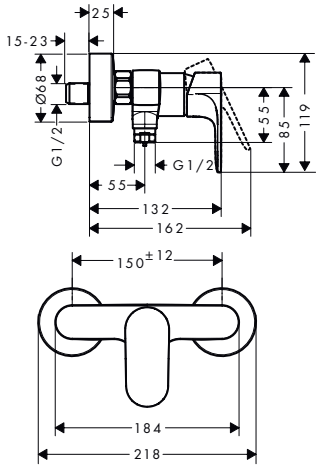

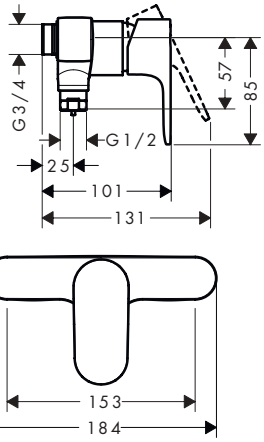

Overview variants

Centre distance (mm)	Max. flow rate at 3 bar (l/min)	Finish	Code no.
150 ± 12	14.9	Chrome	72640000
		Matt Black	72640670
153	11.9	Chrome	72642000

Rebris S Single lever shower mixer for exposed installation with 2 flow rates

Features

- 1 function
- centre distance: 150 ± 12 mm
- maximum flow rate at 3 bar: 18,3 l/min
- flow rate of hand shower at 3 bar: 18,3 l/min
- ceramic cartridge
- temperature limitation adjustable
- non-return valve
- with silencer
- hose connection DN15
- connection dimension: DN15
- min. operating pressure: 1 bar
- max. operating pressure: 10 bar
- connection type: S-connections

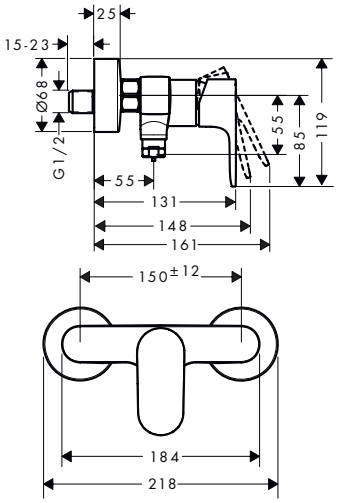

Sustainability

Eco Selection

Finish	Code no.
Chrome	72643000
Matt Black	72643670

Measurements within scale drawings are in mm.
Technical specifications and units of measure are subject to change.

Rebris S Single lever shower mixer for concealed installation for iBox universal

Features

- 1 function
- maximum flow rate at 3 bar: 31 l/min
- ceramic cartridge
- temperature limitation adjustable
- min. operating pressure: 1 bar
- max. operating pressure: 10 bar
- connection type: basic set

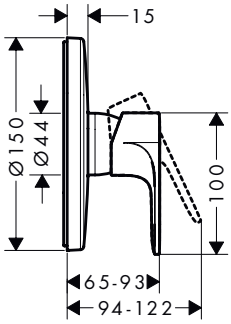

Finish	Code no.
Chrome	72667000
Matt Black	72667670

Rebris S Single lever shower mixer for concealed installation

Features

- 1 function
- maximum flow rate at 3 bar: 28,7 l/min
- min. operating pressure: 1 bar
- max. operating pressure: 10 bar
- connection type: basic set

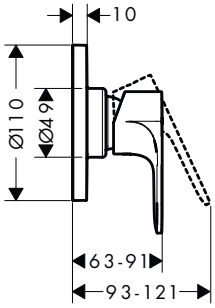

Finish	Code no.
Chrome	72649000
Matt Black	72649670

Required parts:	Code no.
Basic set for single lever shower mixer for concealed installation	13620180

Measurements within scale drawings are in mm.
Technical specifications and units of measure are subject to change.

Rebris S Single lever shower mixer set for concealed installation

Features

- consists of: single lever shower mixer, basic set
- 1 function
- maximum flow rate at 3 bar: 28,7 l/min
- ceramic cartridge
- temperature limitation adjustable
- min. operating pressure: 1 bar
- max. operating pressure: 10 bar
- connection type: basic set

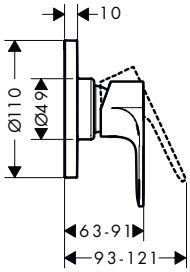

Finish	Code no.
Chrome	72648000
Matt Black	72648670

Measurements within scale drawings are in mm.
Technical specifications and units of measure are subject to change.

Rebris E Single lever basin mixers

Features of all variants

- handle variant: lever handle
- spray type: normal spray
- ceramic cartridge
- temperature limitation adjustable
- suitable for continuous flow water heaters
- connection type: G ⅜ hose connections
- connection dimension: DN15
- aerator can be easily removed with the help of a coin and without tools
- EU taxonomy: max. 6 l/min - Substantial Contribution (SC) possible

80

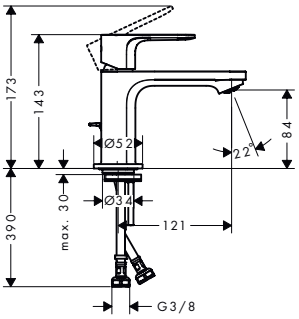

110

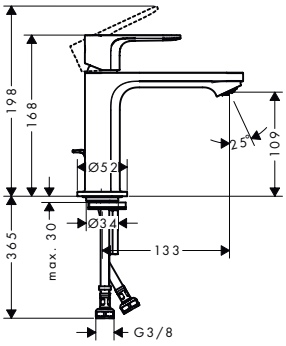

240

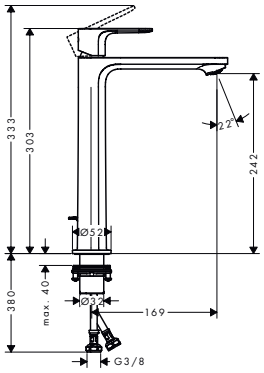

Sustainability

CoolStart | EcoSmart | Eco Smart+

Technologies

AirPower | Comfort Zone | Remove &Clean

Overview variants

Comfort-Zone	Projection (mm)	Spout height (mm)	Waste set	Material waste set	CoolStart	For wash bowls	Max. flow rate at 3 bar (l/min)	Finish	Code no.
80	121	84	pop-up	synthetic	■	–	4	Chrome	72587000
								Matt Black	72587670
80	121	84	pop-up	synthetic	■	–	5	Chrome	72553000
								Matt Black	72553670
80	121	84	pop-up	metal	■	–	5	Chrome	72585000
								Matt Black	72585670
80	121	84	without	–	■	–	5	Chrome	72554000
								Matt Black	72554670
80	121	84	pop-up	synthetic	–	–	5	Chrome	72550000
110	133	109	pop-up	synthetic	■	–	4	Chrome	72589000
								Matt Black	72589670
110	133	109	pop-up	synthetic	■	–	5	Chrome	72559000
								Matt Black	72559670
110	133	109	pop-up	metal	■	–	5	Chrome	72551000
								Matt Black	72551670
110	133	109	without	–	■	–	5	Chrome	72560000
								Matt Black	72560670

For more information about this product, please see the next page.

Measurements within scale drawings are in mm.
Technical specifications and units of measure are subject to change.

Rebris E Single lever basin mixers

Overview variants

Comfort-Zone	Projection (mm)	Spout height (mm)	Waste set	Material waste set	CoolStart	For wash bowls	Max. flow rate at 3 bar (l/min)	Finish	Code no.
110	133	109	pop-up	synthetic	–	–	5	Chrome	72557000
								Matt Black	72557670
240	169	242	pop-up	synthetic	■	■	4	Chrome	72591000
								Matt Black	72591670
240	169	242	pop-up	synthetic	■	■	5	Chrome	72581000
								Matt Black	72581670
240	169	242	without	–	■	■	5	Chrome	72583000

Rebris E Single lever basin mixer 210 with swivel spout and pop-up waste set

Features

- consists of: single lever basin mixer, waste set
- ComfortZone: 210
- projection: 154 mm
- spout height: 222 mm
- handle variant: lever handle
- swivel range 120°
- spray type: normal spray
- maximum flow rate at 3 bar: 5 l/min
- ceramic cartridge
- temperature limitation adjustable
- suitable for continuous flow water heaters
- pop-up waste set G 1¼
- material waste set: synthetic
- connection type: G ⅜ hose connections
- connection dimension: DN15
- EU taxonomy: max. 6 l/min - Substantial Contribution (SC) possible

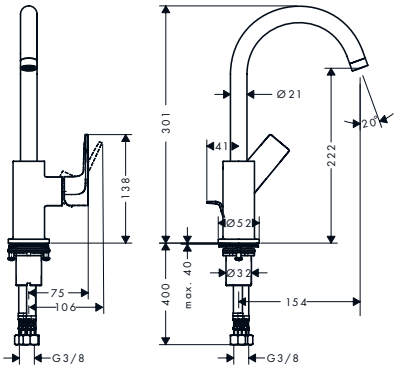

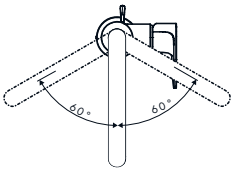

Sustainability

EcoSmart

Technologies

AirPower

Comfort Zone

Finish	Code no.
Chrome	72576000
Matt Black	72576670

Measurements within scale drawings are in mm.
Technical specifications and units of measure are subject to change.

Rebris E Pillar tap 80 with lever handle for cold water or pre-adjusted water without waste set

Features

- ComfortZone: 80
- projection: 121 mm
- spout height: 84 mm
- handle variant: lever handle
- spray type: normal spray
- maximum flow rate at 3 bar: 5 l/min
- ceramic cartridge
- for cold water connection
- connection type: G ⅜ hose connection
- connection dimension: DN15
- aerator can be easily removed with the help of a coin and without tools
- EU taxonomy: max. 6 l/min - Substantial Contribution (SC) possible

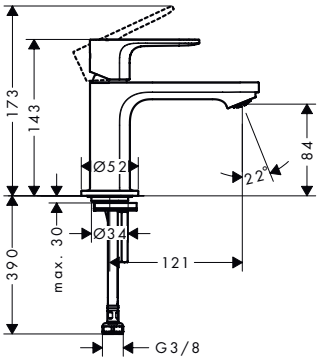

Sustainability

Technologies

Finish	Code no.
Chrome	72506000
Matt Black	72506670

Rebris E Single lever basin mixer for concealed installation wall-mounted with spout 20 cm

Features

- consists of: single lever basin mixer for concealed installation wall-mounted, waste set
- projection: 200 mm
- handle variant: lever handle
- spray type: normal spray
- maximum flow rate at 3 bar: 5 l/min
- ceramic cartridge
- temperature limitation adjustable
- suitable for continuous flow water heaters
- non-closing waste set
- material waste set: metal
- connection type: basic set
- connection dimension: DN15
- handle can be positioned on the right or left, depending on the basic set installation
- EU taxonomy: max. 6 l/min - Substantial Contribution (SC) possible

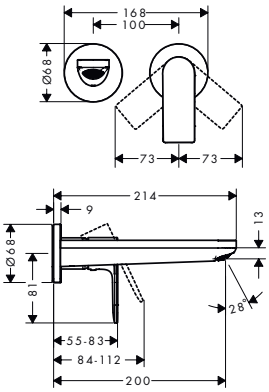

Sustainability

Technologies

Finish	Code no.
Chrome	72568000
Matt Black	72568670

Required parts:		Code no.
	Basic set for single lever basin mixer for concealed installation wall-mounted	13622180

Rebris E Single lever basin mixer 110 with bidette hand shower and shower hose 160 cm without waste set

Features

- consists of: single lever basin mixer, bidette hand shower, shower holder, shower hose
- ComfortZone: 110
- projection: 133 mm
- spout height: 109 mm
- handle variant: lever handle
- spray type: normal spray
- maximum flow rate at 3 bar: 4,7 l/min
- ceramic cartridge
- temperature limitation adjustable
- suitable for continuous flow water heaters
- connection type: G ⅜ hose connections
- connection dimension: DN15
- aerator can be easily removed with the help of a coin and without tools
- EU taxonomy: max. 6 l/min - Substantial Contribution (SC) possible

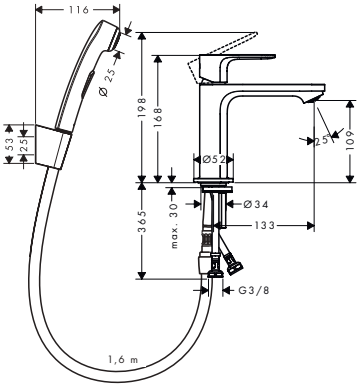

Sustainability

EcoSmart

Technologies

AirPower | Comfort Zone | Remove &Clean

Finish	Code no.
Chrome	72216000

Rebris E Single lever bidet mixers

Features of all variants

- consists of: single lever bidet mixer, waste set
- spout height: 89 mm
- aerator with ball pivot
- spray type: normal spray
- maximum flow rate at 3 bar: 5 l/min
- ceramic cartridge
- suitable for continous flow water heaters
- pop-up waste set G 1¼
- connection type: G ⅜ hose connections
- connection dimension: DN15
- EU taxonomy: max. 6 l/min - Substantial Contribution (SC) possible

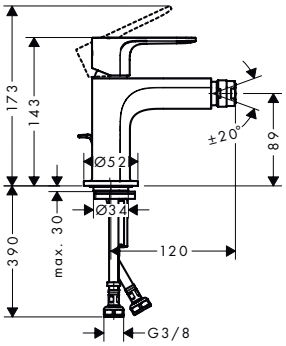

Sustainability

EcoSmart

Technologies

AirPower

Overview variants

Waste set	Material waste set	Finish	Code no.
pop-up	synthetic	Chrome	72211000
		Matt Black	72211670
pop-up	metal	Chrome	72213000
		Matt Black	72213670

Measurements within scale drawings are in mm.
Technical specifications and units of measure are subject to change.

Rebris E Single lever bath mixers

Features of all variants

- 2 functions
- spray type mixer: normal spray
- ceramic cartridge
- temperature limitation adjustable
- diverter with automatic resetting
- with silencer
- suitable for continous flow water heaters
- wall-mounted
- min. operating pressure: 1 bar
- max. operating pressure: 10 bar

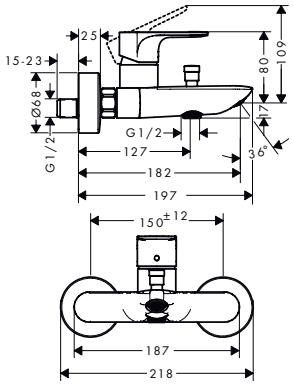

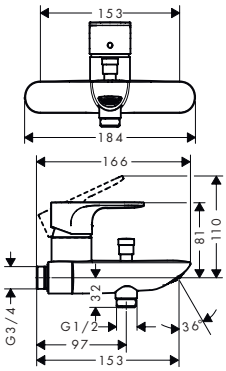

Technologies

AirPower

Overview variants

Centre distance (mm)	Max. flow rate at 3 bar (l/min)	Finish	Code no.
150 ± 12	20.4	Chrome	72450000
		Matt Black	72450670
153	20.5	Chrome	72452000

Rebris E Single lever bath mixers for concealed installation for iBox universal

Features of all variants

- 2 functions
- ceramic cartridge
- temperature limitation adjustable
- diverter with automatic resetting
- non-return valve
- connection type: basic set
- wall-mounted
- min. operating pressure: 1 bar
- max. operating pressure: 10 bar
- no additional maintenance opening required

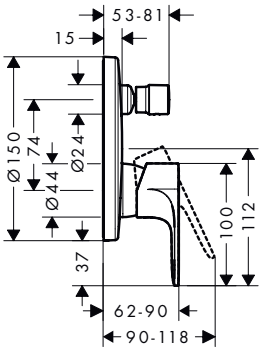

Overview variants

Max. flow rate at 3 bar (l/min)	Finish	Code no.
27.6	Chrome	72468000
	Matt Black	72468670
25.6	Chrome	72469000
	Matt Black	72469670

Measurements within scale drawings are in mm.
Technical specifications and units of measure are subject to change.

Rebris E Single lever bath mixer for concealed installation

Features

- 2 functions
- maximum flow rate at 3 bar: 30,7 l/min
- flow rate for bath spout at 3 bar: 30,7 l/min
- flow rate of hand shower at 3 bar: 27,4 l/min
- ceramic cartridge
- diverter with automatic resetting
- connection type: basic set
- wall-mounted
- min. operating pressure: 1 bar
- max. operating pressure: 10 bar
- no additional maintenance opening required

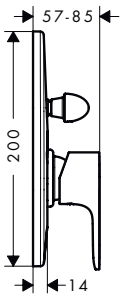

Finish	Code no.
Chrome	72459000
Matt Black	72459670

Required parts:	Code no.
Basic set for single lever bath mixer for concealed installation	31741180

Rebris E Single lever bath mixer set for concealed installation

Features

- consists of: Single lever bath mixer, basic set
- 2 functions
- maximum flow rate at 3 bar: 30,7 l/min
- flow rate for bath spout at 3 bar: 30,7 l/min
- flow rate of hand shower at 3 bar: 27,4 l/min
- ceramic cartridge
- temperature limitation adjustable
- diverter with automatic resetting
- connection type: basic set
- wall-mounted
- min. operating pressure: 1 bar
- max. operating pressure: 10 bar

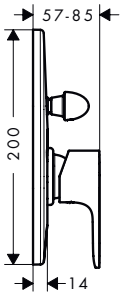

Finish	Code no.
Chrome	72458000
Matt Black	72458670

Rebris E Bath spout

Features

- connection type: G ½
- with escutcheon
- projection: 200 mm
- wall-mounted
- maximum flow rate at 3 bar: 22 l/min
- spray type: normal spray

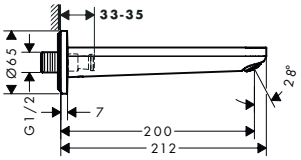

Technologies

AirPower

Finish	Code no.
Chrome	72431000
Matt Black	72431670

Measurements within scale drawings are in mm.
Technical specifications and units of measure are subject to change.

Rebris E Single lever bath and shower mixer Monotrou with 2 flow rates

Features

- 2 functions
- projection: 140 mm
- spray type mixer: normal spray
- maximum flow rate at 3 bar: 18,7 l/min
- flow rate for bath spout at 3 bar: 18,7 l/min
- flow rate of hand shower at 3 bar: 13,6 l/min
- ceramic cartridge with Eco handle position for 2 flow rates
- temperature limitation adjustable
- diverter with automatic resetting
- protected against backflow, according to DIN EN 1717
- connection dimension: DN15
- connection type: G ⅜ hose connections
- installation on bath rim
- min. operating pressure: 1 bar
- max. operating pressure: 10 bar
- no additional maintenance opening required

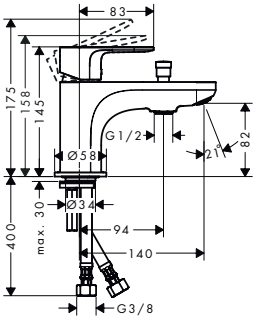

Sustainability

Eco Selection

Technologies

AirPower

Finish	Code no.
Chrome	72437000

Rebris E Single lever bath mixer Monotrou

Features

- 1 function
- projection: 140 mm
- spray type mixer: normal spray
- maximum flow rate at 3 bar: 19,9 l/min
- flow rate for bath spout at 3 bar: 19,9 l/min
- ceramic cartridge
- temperature limitation adjustable
- connection type: G ⅜ hose connections
- installation on bath rim
- min. operating pressure: 1 bar
- max. operating pressure: 10 bar

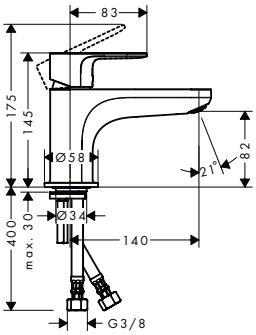

Technologies

AirPower

Finish	Code no.
Chrome	72435000

Rebris E Single lever shower mixers for exposed installation

Features of all variants

- 1 function
- ceramic cartridge
- temperature limitation adjustable
- non-return valve
- with silencer
- hose connection DN15
- min. operating pressure: 1 bar
- max. operating pressure: 10 bar

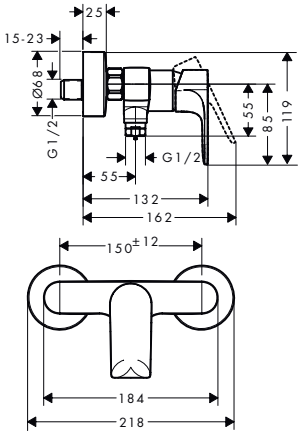

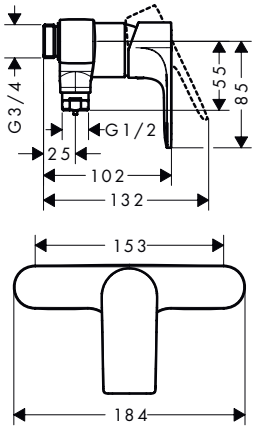

Overview variants

Centre distance (mm)	Max. flow rate at 3 bar (l/min)	Finish	Code no.
150 ± 12	28	Chrome	72650000
		Matt Black	72650670
153	12	Chrome	72652000

Rebris E Single lever shower mixer for concealed installation for iBox universal

Features

- 1 function
- maximum flow rate at 3 bar: 31 l/min
- ceramic cartridge
- temperature limitation adjustable
- min. operating pressure: 1 bar
- max. operating pressure: 10 bar
- connection type: basic set

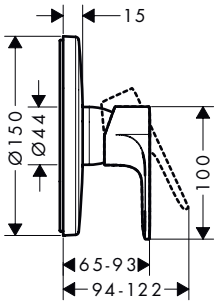

Finish	Code no.
Chrome	72668000
Matt Black	72668670

Measurements within scale drawings are in mm.
Technical specifications and units of measure are subject to change.

Rebris E Single lever shower mixer for concealed installation

Features

- 1 function
- maximum flow rate at 3 bar: 28,7 l/min
- temperature limitation adjustable
- min. operating pressure: 1 bar
- max. operating pressure: 10 bar
- connection type: basic set

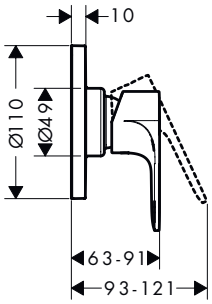

Finish	Code no.
Chrome	72659000
Matt Black	72659670

Required parts:	Code no.
Basic set for single lever shower mixer for concealed installation	13620180

Rebris E Single lever shower mixer set for concealed installation

Features

- consists of: single lever shower mixer, basic set
- 1 function
- maximum flow rate at 3 bar: 28,7 l/min
- ceramic cartridge
- temperature limitation adjustable
- min. operating pressure: 1 bar
- max. operating pressure: 10 bar
- connection type: basic set

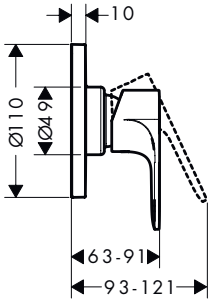

Finish	Code no.
Chrome	72658000
Matt Black	72658670

Logis

Logis Single lever basin mixers

Features of all variants

- handle variant: lever handle
- spray type: normal spray
- maximum flow rate at 3 bar: 5 l/min
- ceramic cartridge
- temperature limitation adjustable
- suitable for continuous flow water heaters
- connection type: G ⅜ hose connections
- connection dimension: DN15
- EU taxonomy: max. 6 l/min - Substantial Contribution (SC) possible

70

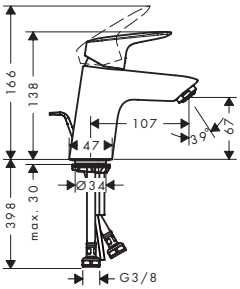

100

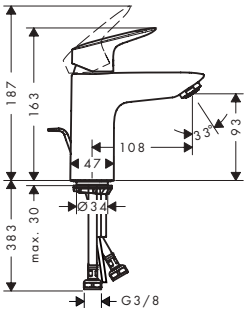

190

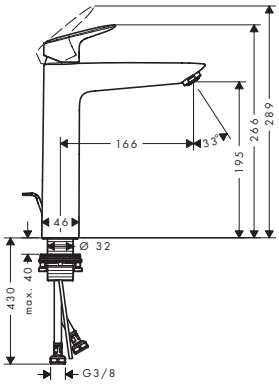

Sustainability

CoolStart, EcoSmart

Technologies

AirPower, Comfort Zone

Certificates/declarations

EPD

Overview variants

ComfortZone	Projection (mm)	Spout height (mm)	Waste set	Material waste set	CoolStart	Finish	Code no.
70	107	67	pop-up	synthetic	■	Chrome	71072000
						Matt Black	71072670
70	107	67	without	–	■	Chrome	71073000
						Matt Black	71073670
70	107	67	pop-up	synthetic	–	Chrome	71070000
						Matt Black	71070670
70	107	67	pop-up	metal	–	Chrome	71170000
						Matt Black	71170670
70	107	67	push-open	metal	–	Chrome	71077000
						Matt Black	71077670
70	107	67	without	–	–	Chrome	71071000
						Matt Black	71071670
100	108	93	pop-up	synthetic	■	Chrome	71102000
						Matt Black	71102670
100	108	93	without	–	■	Chrome	71103000
						Matt Black	71103670
100	108	93	pop-up	synthetic	–	Chrome	71100000
						Matt Black	71100670
100	108	93	pop-up	metal	–	Chrome	71171000
						Matt Black	71171670

Measurements within scale drawings are in mm.
Technical specifications and units of measure are subject to change.

Logis Single lever basin mixers

Overview variants

ComfortZone	Projection (mm)	Spout height (mm)	Waste set	Material waste set	CoolStart	Finish	Code no.
100	108	93	push-open	synthetic	–	Chrome	71107000
						Matt Black	71107670
100	108	93	without	–	–	Chrome	71101000
						Matt Black	71101670
190	166	195	pop-up	synthetic	–	Chrome	71090000
						Matt Black	71090670
190	166	195	without	–	–	Chrome	71091000
						Matt Black	71091670

Logis Single lever basin mixers LowFlow

Features of all variants

- consists of: single lever basin mixer, waste set
- handle variant: lever handle
- spray type: normal spray
- maximum flow rate at 3 bar: 3,5 l/min
- ceramic cartridge
- temperature limitation adjustable
- suitable for continuous flow water heaters
- pop-up waste set G 1¼
- material waste set: synthetic
- connection type: G ⅜ hose connections
- connection dimension: DN15
- EU taxonomy: max. 6 l/min - Substantial Contribution (SC) possible

70

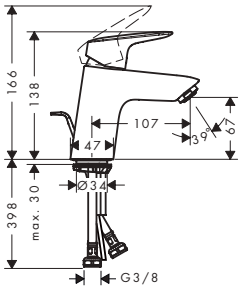

100

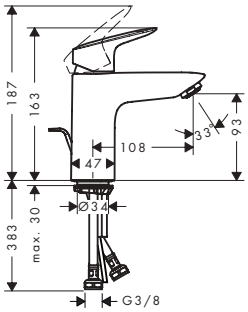

Sustainability

EcoSmart

Technologies

AirPower

Comfort Zone

Overview variants

ComfortZone	Projection (mm)	Spout height (mm)	Finish	Code no.
70	107	67	Chrome	71078000
100	108	93	Chrome	71104000

Measurements within scale drawings are in mm.
Technical specifications and units of measure are subject to change.

Logis Single lever basin mixer 70 for LowPressure/vented hot water cylinders with push-open waste set

Features

- consists of: single lever basin mixer, waste set
- ComfortZone: 70
- projection: 107 mm
- spout height: 67 mm
- handle variant: lever handle
- spray type: normal spray
- maximum flow rate at 3 bar: 5 l/min
- ceramic cartridge
- temperature limitation adjustable
- push-open waste set G 1¼
- material waste set: synthetic
- connection type: G ⅜ hose connections
- EU taxonomy: max. 6 l/min - Substantial Contribution (SC) possible

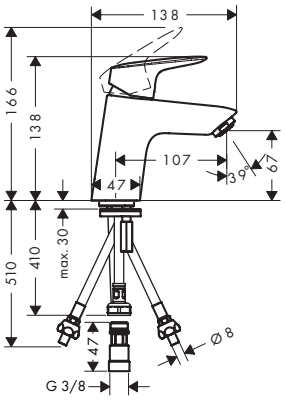

Technologies

Comfort Zone | Low Pressure

Certificates/declarations

EPD

Finish	Code no.
Chrome	71074000

Logis Single lever basin mixers with 2 flow rates

Features of all variants

- handle variant: lever handle
- spray type: normal spray
- maximum flow rate at 3 bar: 9,5 l/min
- ceramic cartridge with Eco handle position for 2 flow rates
- temperature limitation adjustable
- suitable for continuous flow water heaters
- connection type: G ⅜ hose connections
- connection dimension: DN15

70

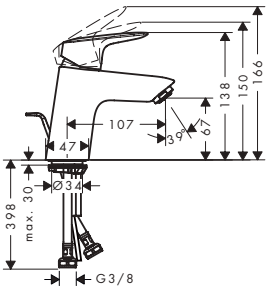

100

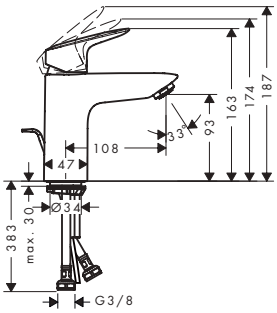

190

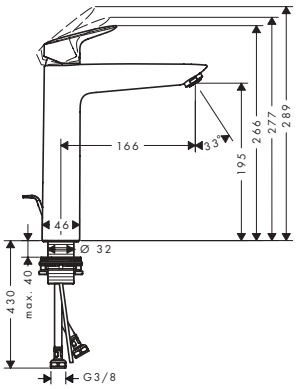

Sustainability

CoolStart | Eco Selection | EcoSmart

Technologies

AirPower | Comfort Zone

Certificates/declarations

EPD

Measurements within scale drawings are in mm.
Technical specifications and units of measure are subject to change.

Logis Single lever basin mixers with 2 flow rates

Overview variants

ComfortZone	Projection (mm)	Spout height (mm)	Waste set	Material waste set	CoolStart	Finish	Code no.
70	107	13	pop-up	synthetic	■	Chrome	71075000
70	107	67	without	–	■	Chrome	71076000
100	108	93	pop-up	synthetic	–	Chrome	71105000
190	166	195	pop-up	synthetic	–	Chrome	71095000

Logis Single lever basin mixers Fine

Features of all variants

- handle variant: lever handle
- spray type: normal spray
- maximum flow rate at 3 bar: 5 l/min
- ceramic cartridge
- temperature limitation adjustable
- suitable for continuous flow water heaters
- connection type: G ⅜ hose connections
- connection dimension: DN15
- aerator can be easily removed with the help of a coin and without tools
- EU taxonomy: max. 6 l/min - Substantial Contribution (SC) possible

110

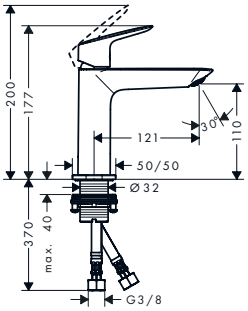

240

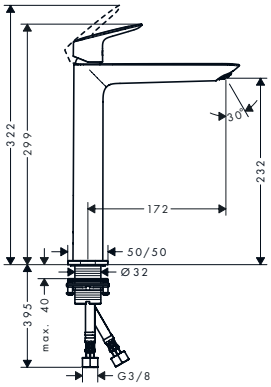

Sustainability

CoolStart
EcoSmart

Technologies

AirPower
Comfort Zone
Remove &Clean

Overview variants

ComfortZone	Projection (mm)	Spout height (mm)	Waste set	Material waste set	CoolStart	For wash bowls	Finish	Code no.
110	121	110	pop-up	synthetic	■	–	Chrome	71254000
							Matt Black	71254670
110	121	110	without	–	■	–	Chrome	71255000
							Matt Black	71255670
110	121	110	pop-up	synthetic	–	–	Chrome	71251000
							Matt Black	71251670
110	121	110	push-open	synthetic	–	–	Chrome	71252000
							Matt Black	71252670
110	121	110	without	–	–	–	Chrome	71253000
							Matt Black	71253670
240	172	232	pop-up	synthetic	–	■	Chrome	71257000
							Matt Black	71257670
240	172	232	without	–	–	■	Chrome	71258000
							Matt Black	71258670

Measurements within scale drawings are in mm.
Technical specifications and units of measure are subject to change.

Logis Single lever basin mixers with swivel spout

Features of all variants

- ComfortZone: 210
- projection: 154 mm
- spout height: 221 mm
- swivel range 120°
- spray type: normal spray
- maximum flow rate at 3 bar: 5 l/min
- ceramic cartridge
- temperature limitation adjustable
- suitable for continuous flow water heaters
- connection type: G ⅜ hose connections
- connection dimension: DN15
- handle position on the side: bottom-side at the base body (not suitable for wash bowls)
- EU taxonomy: max. 6 l/min - Substantial Contribution (SC) possible

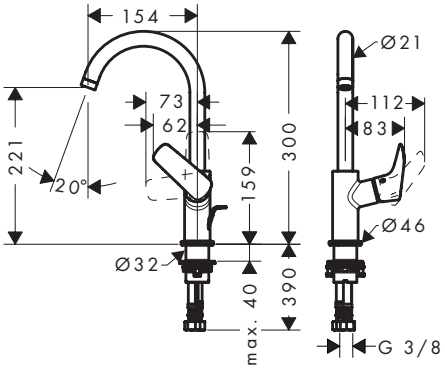

Sustainability

Technologies

Certificates/declarations

Overview variants

ComfortZone	Projection (mm)	Spout height (mm)	Waste set	Material waste set	Finish	Code no.
210	154	221	pop-up	synthetic	Chrome	71130000
					Matt Black	71130670
210	154	221	without	–	Chrome	71131000
					Matt Black	71131670

Logis 2-handle basin mixers

Features of all variants

- ComfortZone: 150
- projection: 145 mm
- spout height: 147 mm
- handle variant: cylinder handle
- swivel range 120°
- spray type: normal spray
- maximum flow rate at 3 bar: 5 l/min
- ceramic valves hot/cold 90°
- suitable for continuous flow water heaters
- connection type: G ⅜ hose connections
- connection dimension: DN15
- EU taxonomy: max. 6 l/min - Substantial Contribution (SC) possible

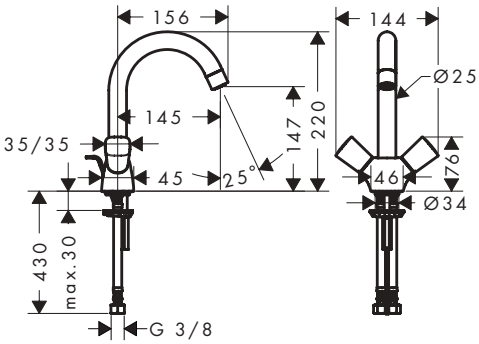

Sustainability

Technologies

Certificates/declarations

Overview variants

ComfortZone	Projection (mm)	Spout height (mm)	Waste set	Material waste set	Finish	Code no.
150	145	147	pop-up	synthetic	Chrome	71222000
150	145	147	without	–	Chrome	71221000

Measurements within scale drawings are in mm.
Technical specifications and units of measure are subject to change.

Logis Pillar tap 80 for cold water or pre-adjusted water without waste set

Features

- ComfortZone: 80
- projection: 84 mm
- spout height: 79 mm
- handle variant: cylinder handle
- spray type: normal spray
- maximum flow rate at 3 bar: 5 l/min
- ceramic valves 90°
- for cold water connection
- connection type: G ⅜ hose connection
- connection dimension: DN15
- EU taxonomy: max. 6 l/min - Substantial Contribution (SC) possible

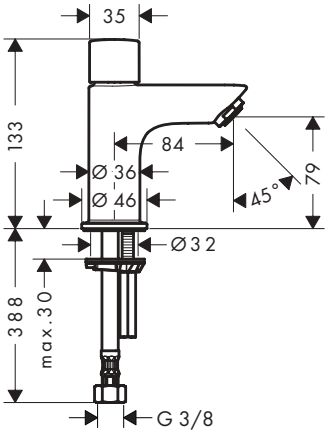

Sustainability

Technologies

Certificates/declarations

Finish	Code no.
Chrome	71120000
Matt Black	71120670

Logis 3-hole basin mixer 150 with pop-up waste set

Features

- consists of: 3-hole basin mixer, waste set
- ComfortZone: 150
- projection: 109 mm
- spout height: 153 mm
- handle variant: cylinder handle
- maximum flow rate at 3 bar: 5 l/min
- ceramic valves hot/cold 90°
- suitable for continuous flow water heaters
- pop-up waste set G 1¼
- material waste set: synthetic
- connection type: G ⅜ hose connections
- connection dimension: DN15
- EU taxonomy: max. 6 l/min - Substantial Contribution (SC) possible

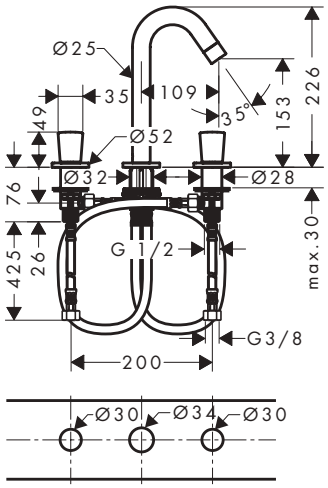

Sustainability

Technologies

Finish	Code no.
Chrome	71133000

Logis Single lever basin mixer for concealed installation wall-mounted with spout 19,5 cm

Features

- consists of: single lever basin mixer for concealed installation wall-mounted, waste set
- projection: 195 mm
- handle variant: lever handle
- spray type: normal spray
- maximum flow rate at 3 bar: 5 l/min
- ceramic cartridge
- temperature limitation adjustable
- suitable for continuous flow water heaters
- non-closing waste set
- material waste set: metal
- connection type: basic set
- connection dimension: DN15
- handle can be positioned on the right or left, depending on the basic set installation
- EU taxonomy: max. 6 l/min - Substantial Contribution (SC) possible

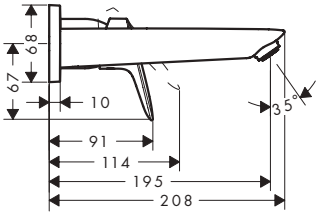

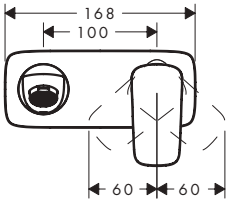

Sustainability

Technologies

Certificates/declarations

Finish	Code no.
Chrome	71220000
Matt Black	71220670

Required parts:	Code no.
Basic set for single lever basin mixer for concealed installation wall-mounted	13622180

Logis Single lever basin mixer for concealed installation Fine wall-mounted with spout 20,6 cm

Features

- consists of: single lever basin mixer for concealed installation wall-mounted, waste set
- projection: 206 mm
- handle variant: lever handle
- spray type: normal spray
- maximum flow rate at 3 bar: 5 l/min
- ceramic cartridge
- temperature limitation adjustable
- suitable for continuous flow water heaters
- non-closing waste set
- material waste set: metal
- connection type: basic set
- connection dimension: DN15
- handle can be positioned on the right or left, depending on the basic set installation
- EU taxonomy: max. 6 l/min - Substantial Contribution (SC) possible

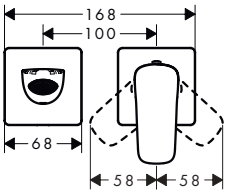

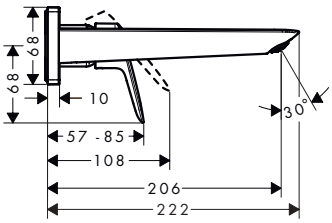

Sustainability

Technologies

Finish	Code no.
Chrome	71256000
Matt Black	71256670

Required parts:	Code no.
Basic set for single lever basin mixer for concealed installation wall-mounted	13622180

Measurements within scale drawings are in mm.
Technical specifications and units of measure are subject to change.

Logis Single lever basin mixer for exposed installation wall-mounted

Features

- projection: 194 mm
- handle variant: lever handle
- centre distance: 150 ± 12 mm
- spray type: normal spray
- maximum flow rate at 3 bar: 5 l/min
- ceramic cartridge
- temperature limitation adjustable
- with noise reduction
- suitable for continuous flow water heaters
- connection type: G ½
- connection dimension: DN15
- EU taxonomy: max. 6 l/min - Substantial Contribution (SC) possible

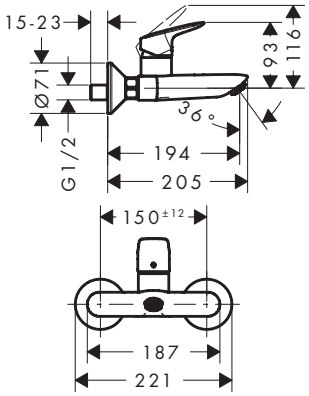

Sustainability

EcoSmart

Technologies

Quick Clean, AirPower

Certificates/declarations

EPD

Finish	Code no.
Chrome	71225000

Logis Single lever basin mixer with bidette hand shower and shower hose 160 cm

Features

- consists of: single lever basin mixer, bidette hand shower, shower holder, shower hose
- ComfortZone: 70
- spout height: 67 mm
- handle variant: lever handle
- maximum flow rate at 3 bar: 5 l/min
- ceramic cartridge
- temperature limitation adjustable
- suitable for continuous flow water heaters
- connection type: G ⅜ hose connections
- connection dimension: DN15
- EU taxonomy: max. 6 l/min - Substantial Contribution (SC) possible

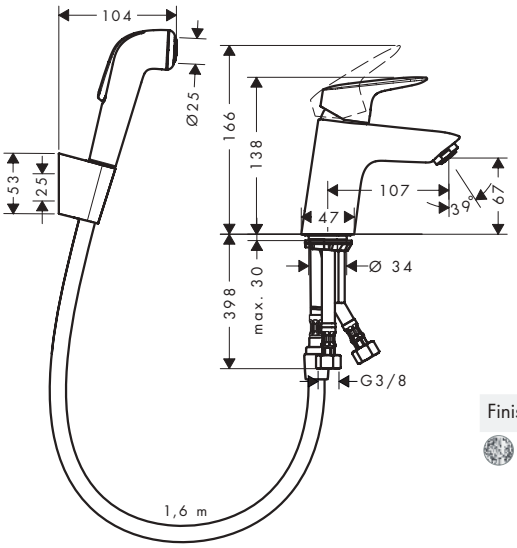

Sustainability

EcoSmart

Technologies

Quick Clean, AirPower, Comfort Zone

Certificates/declarations

EPD

Finish	Code no.
Chrome	71290000

Logis Single lever bidet mixers

Features of all variants

- consists of: single lever bidet mixer, waste set
- projection: 119 mm
- aerator with ball pivot
- spray type: normal spray
- maximum flow rate at 3 bar: 7,2 l/min
- ceramic cartridge
- temperature limitation adjustable
- suitable for continous flow water heaters
- pop-up waste set G 1¼
- connection type: G ⅜ hose connections
- connection dimension: DN15

70

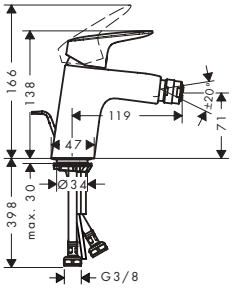

100

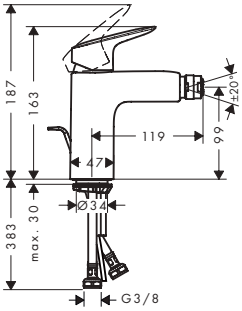

Technologies

AirPower | Comfort Zone

Certificates/declarations

EPD

Overview variants

ComfortZone	Projection (mm)	Spout height (mm)	Waste set	Material waste set	Finish	Code no.
70	119	71	pop-up	synthetic	Chrome	71204000
					Matt Black	71204670
70	119	71	pop-up	metal	Chrome	71203000
100	119	99	pop-up	synthetic	Chrome	71200000
					Matt Black	71200670

Logis Single lever bidet mixer 110 Fine with pop-up waste set

Features

- consists of: single lever bidet mixer, waste set
- projection: 112 mm
- spout height: 102 mm
- aerator with ball pivot
- spray type: normal spray
- maximum flow rate at 3 bar: 5 l/min
- ceramic cartridge
- temperature limitation adjustable
- suitable for continous flow water heaters
- material waste set: synthetic
- connection type: G ⅜ hose connections
- connection dimension: DN15
- EU taxonomy: max. 6 l/min - Substantial Contribution (SC) possible

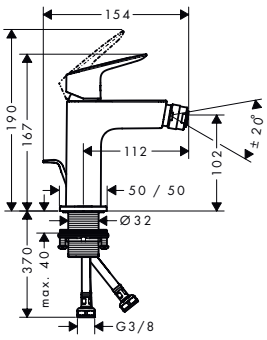

Sustainability

EcoSmart

Technologies

AirPower | Comfort Zone

Finish	Code no.
Chrome	71201000
Matt Black	71201670

Measurements within scale drawings are in mm.
Technical specifications and units of measure are subject to change.

Logis Bidet set with vertical spray

Features

- consists of: Bidet mixer, vertical spray
- maximum flow rate at 3 bar: 7,7 l/min
- ceramic cartridge
- vertical spray and diverter
- integrated non-return valve
- efficient from 0,5 bar onwards
- connection type: G ⅜ hose connections
- connection dimension: DN15

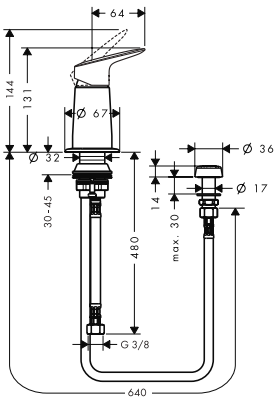

Sustainability

Technologies

Certificates/declarations

Finish	Code no.
Chrome	71629000

Logis Single lever bath mixers for exposed installation

Features of all variants

- 2 functions
- spray type mixer: normal spray
- maximum flow rate at 3 bar: 20 l/min
- flow rate for bath spout at 3 bar: 20 l/min
- ceramic cartridge
- temperature limitation adjustable
- diverter with automatic resetting
- non-return valve
- with silencer
- suitable for continous flow water heaters
- connection dimension: DN15
- wall-mounted
- min. operating pressure: 1 bar
- max. operating pressure: 10 bar

Technologies

Certificates/declarations

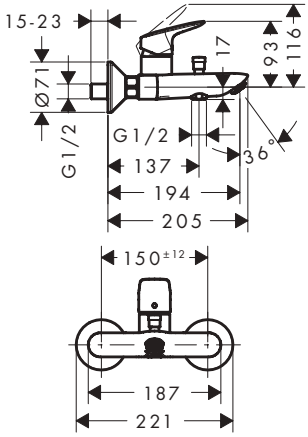

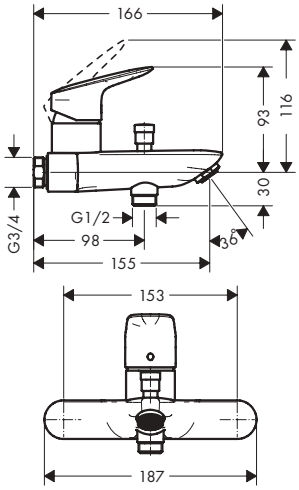

Overview variants

	Centre distance (mm)	Finish	Code no.
	150 ± 12	Chrome	71400000
		Matt Black	71400670
	153	Chrome	71430000

Measurements within scale drawings are in mm.
Technical specifications and units of measure are subject to change.

Logis Single lever bath mixer for exposed installation with 2 flow rates

Features

- 2 functions
- projection: 194 mm
- centre distance: 150 ± 12 mm
- spray type mixer: normal spray
- maximum flow rate at 3 bar: 22 l/min
- ceramic cartridge with Eco handle position for 2 flow rates
- temperature limitation adjustable
- diverter with automatic resetting
- non-return valve
- with silencer
- suitable for continous flow water heaters
- connection dimension: DN15
- connection type: S-connections
- wall-mounted
- min. operating pressure: 1 bar
- max. operating pressure: 10 bar
- no additional maintenance opening required

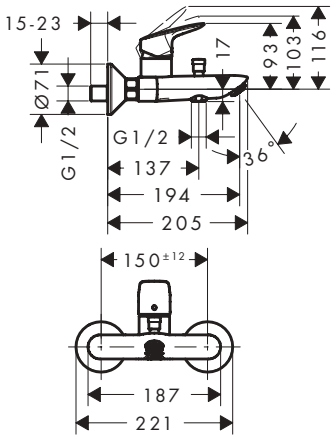

Sustainability

Technologies

Certificates/declarations

Finish	Code no.
Chrome	71401000
Matt Black	71401670

Logis Single lever bath mixer with long spout

Features

- 2 functions
- projection: 300 mm
- centre distance: 150 ± 12 mm
- spray type mixer: normal spray
- maximum flow rate at 3 bar: 16 l/min
- flow rate for bath spout at 3 bar: 16 l/min
- flow rate of hand shower at 3 bar: 7,5 l/min
- ceramic cartridge
- temperature limitation adjustable
- diverter with automatic resetting
- suitable for continous flow water heaters
- connection dimension: DN15
- connection type: S-connections
- wall-mounted

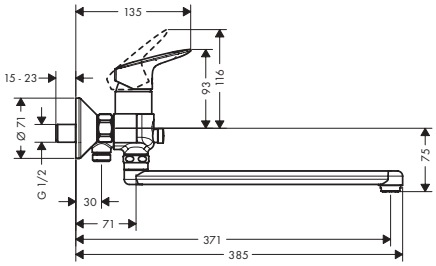

Technologies

Certificates/declarations

Finish	Code no.
Chrome	71402000

Measurements within scale drawings are in mm.
Technical specifications and units of measure are subject to change.

Logis 2-handle bath mixer for exposed installation

Features

- 2 functions
- centre distance: 150 ± 12 mm
- maximum flow rate at 3 bar: 26 l/min
- flow rate for bath spout at 3 bar: 26 l/min
- flow rate of hand shower at 3 bar: 17 l/min
- ceramic valves hot/cold 90°
- diverter with automatic resetting
- non-return valve
- with silencer
- suitable for continous flow water heaters
- connection type: S-connections

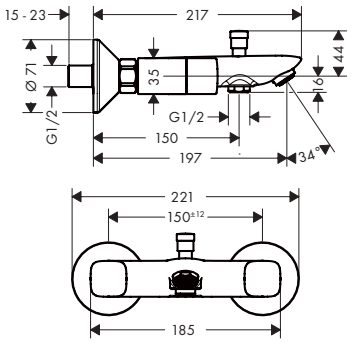

Technologies

AirPower

Finish	Code no.
Chrome	71243000

Logis Single lever bath mixers for concealed installation for iBox universal

Features of all variants

- 2 functions
- ceramic cartridge
- temperature limitation adjustable
- diverter with automatic resetting
- connection type: basic set
- wall-mounted
- min. operating pressure: 1 bar
- max. operating pressure: 10 bar

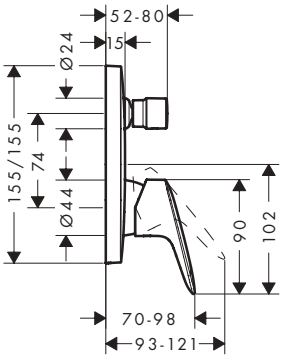

Certificates/declarations

EPD

Overview variants

Security combination EN 1717	Max. flow rate at 3 bar (l/min)	Finish	Code no.
–	29	Chrome	71405000
		Matt Black	71405670
■	25.6	Chrome	71407000
		Matt Black	71407670

Required parts (choose one):			Code no.
Option 1		iBox universal 2 Basic set	01500180
	+	Adapter plate for iBox universal 2	13588000
Option 2		iBox universal Basic set	01800180

Measurements within scale drawings are in mm.
Technical specifications and units of measure are subject to change.

Logis Single lever bath mixer for concealed installation

Features

- 2 functions
- maximum flow rate at 3 bar: 30,7 l/min
- flow rate for bath spout at 3 bar: 30,7 l/min
- flow rate of hand shower at 3 bar: 27,4 l/min
- ceramic cartridge
- temperature limitation adjustable
- diverter with automatic resetting
- connection type: basic set
- wall-mounted
- min. operating pressure: 1 bar
- max. operating pressure: 10 bar

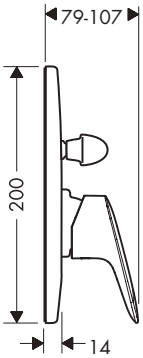

Certificates/declarations

Finish	Code no.
Chrome	71406000

Required parts:	Code no.
Basic set for single lever bath mixer for concealed installation	31741180

Logis Single lever bath mixer set for concealed installation

Features

- consists of: Single lever bath mixer, basic set
- 2 functions
- maximum flow rate at 3 bar: 30,7 l/min
- flow rate for bath spout at 3 bar: 30,7 l/min
- flow rate of hand shower at 3 bar: 27,4 l/min
- ceramic cartridge
- connection type: basic set
- wall-mounted
- min. operating pressure: 1 bar
- max. operating pressure: 10 bar

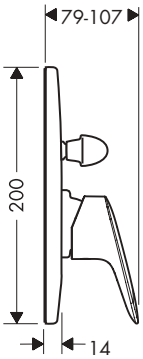

Certificates/declarations

Finish	Code no.
Chrome	71409000

Measurements within scale drawings are in mm.
Technical specifications and units of measure are subject to change.

Logis Bath spout

Features

- 1 function
- connection type: G ¾
- with escutcheon
- projection: 195 mm
- wall-mounted
- maximum flow rate at 3 bar: 21 l/min
- connection dimension: DN20
- spray type: normal spray

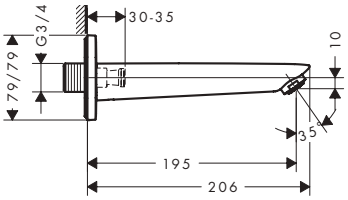

Technologies

Certificates/declarations

Finish	Code no.
Chrome	71410000
Matt Black	71410670

Optional parts:	Code no.
Socket for G1/2 connection	95626000

Logis Single lever bath and shower mixer Monotrou

Features

- 2 functions
- projection: 145 mm
- spray type mixer: normal spray
- maximum flow rate at 3 bar: 20 l/min
- ceramic cartridge
- temperature limitation adjustable
- diverter with automatic resetting
- suitable for continous flow water heaters
- connection dimension: DN15
- connection type: G ⅜ hose connections
- installation on bath rim
- min. operating pressure: 1 bar
- max. operating pressure: 10 bar

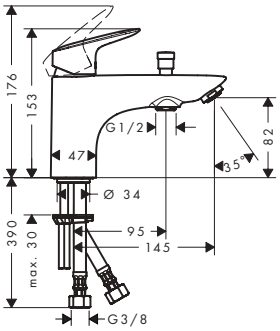

Technologies

Certificates/declarations

Finish	Code no.
Chrome	71312000

Logis Single lever bath and shower mixer Monotrou with 2 flow rates

Features

- 2 functions
- projection: 145 mm
- spray type mixer: normal spray
- maximum flow rate at 3 bar: 20,5 l/min
- flow rate for bath spout at 3 bar: 20,5 l/min
- flow rate of hand shower at 3 bar: 14,9 l/min
- temperature limitation adjustable
- diverter with automatic resetting
- non-return valve
- suitable for continous flow water heaters
- connection dimension: DN15
- connection type: G ⅜ hose connections
- installation on bath rim
- min. operating pressure: 1 bar
- max. operating pressure: 10 bar
- no additional maintenance opening required

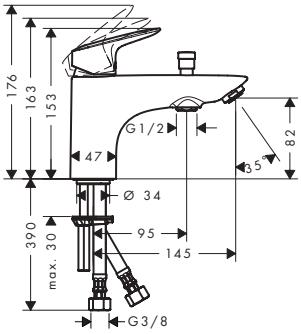

Sustainability

Technologies

Certificates/declarations

Finish	Code no.
Chrome	71315000
Matt Black	71315670

Logis Single lever bath mixer Monotrou

Features

- 1 function
- projection: 145 mm
- spray type mixer: normal spray
- maximum flow rate at 3 bar: 20 l/min
- ceramic cartridge
- temperature limitation adjustable
- non-return valve
- suitable for continous flow water heaters
- connection dimension: DN15
- connection type: G ⅜ hose connections
- installation on bath rim
- min. operating pressure: 1 bar
- max. operating pressure: 10 bar

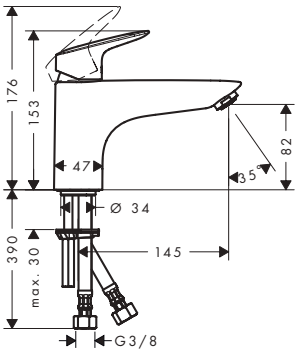

Technologies

Certificates/declarations

Finish	Code no.
Chrome	71311000

Measurements within scale drawings are in mm.
Technical specifications and units of measure are subject to change.

Logis 3-hole rim mounted single lever bath mixer for Secuflex

Features

- consists of: 3-hole rim mounted single lever bath mixer, hand shower, shower holder
- 2 functions
- projection: 111 mm
- spray type mixer: normal spray
- spray type hand shower: Rain
- maximum pull-out length of hand shower: 1.10 m
- maximum flow rate at 3 bar: 18 l/min
- flow rate for bath spout at 3 bar: 18 l/min
- flow rate of hand shower at 3 bar: 15 l/min
- ceramic cartridge
- temperature limitation adjustable
- non-return valve
- connection dimension: DN15
- connection type: basic set
- installation on bath rim

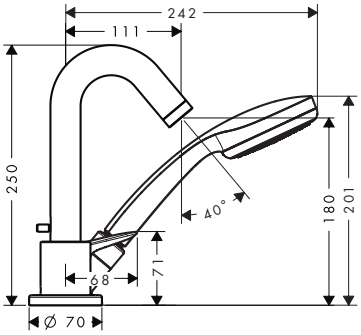

Technologies

Spray types

Finish	Code no.
Chrome	71310000

Required parts:	Code no.
Basic set for 3-hole rim mounted single lever bath mixer	13437180

Logis 3-hole rim mounted single lever bath mixer

Features

- consists of: 3-hole rim mounted single lever bath mixer, hand shower
- 2 functions
- projection: 111 mm
- spray type mixer: normal spray
- spray type hand shower: Rain
- maximum flow rate at 3 bar: 18 l/min
- flow rate for bath spout at 3 bar: 18 l/min
- flow rate of hand shower at 3 bar: 15 l/min
- ceramic cartridge
- temperature limitation adjustable
- connection dimension: DN15
- connection type: basic set
- installation on bath rim
- min. operating pressure: 1 bar
- max. operating pressure: 10 bar

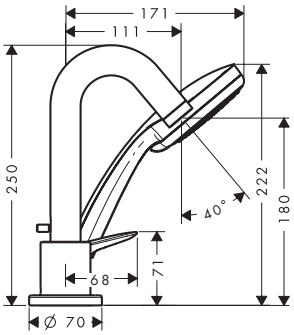

Technologies

Spray types

Finish	Code no.
Chrome	71313000

Required parts:	Code no.
Basic set for 3-hole rim mounted single lever bath mixer	13439180

Logis Single lever shower mixers for exposed installation

Features of all variants

- 1 function
- ceramic cartridge
- temperature limitation adjustable
- non-return valve
- with silencer
- hose connection DN15
- connection dimension: DN15
- min. operating pressure: 1 bar
- max. operating pressure: 10 bar

Certificates/declarations

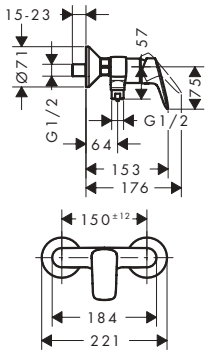

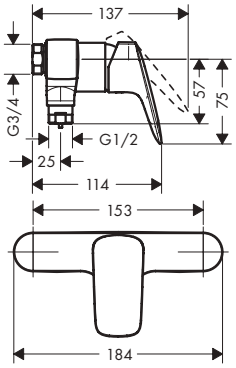

Overview variants

Centre distance (mm)	Max. flow rate at 3 bar (l/min)	Finish	Code no.
150 ± 12	28	Chrome	71600000
		Matt Black	71600670
153	26	Chrome	71630000

Logis Single lever shower mixer for exposed installation with 2 flow rates

Features

- 1 function
- centre distance: 150 ± 12 mm
- maximum flow rate at 3 bar: 20 l/min
- flow rate of hand shower at 3 bar: 17 l/min
- ceramic cartridge with Eco handle position for a reduced flowrate by up to 50%
- temperature limitation adjustable
- non-return valve
- with silencer
- hose connection DN15
- connection dimension: DN15
- min. operating pressure: 1 bar
- max. operating pressure: 10 bar
- connection type: S-connections

Sustainability

Certificates/declarations

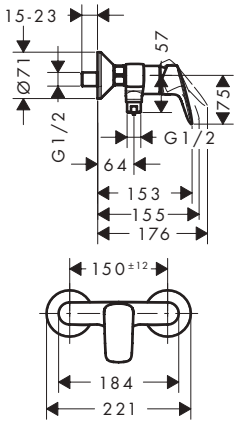

Finish	Code no.
Chrome	71601000
Matt Black	71601670

Measurements within scale drawings are in mm.
Technical specifications and units of measure are subject to change.

Logis Single lever shower mixer for concealed installation for iBox universal

Features

- 1 function
- maximum flow rate at 3 bar: 29,3 l/min
- temperature limitation adjustable
- min. operating pressure: 1 bar
- max. operating pressure: 10 bar
- connection type: basic set

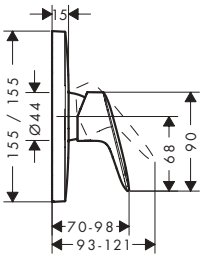

Certificates/declarations

Finish	Code no.
Chrome	71605000
Matt Black	71605670

Required parts (choose one):			Code no.
Option 1		iBox universal 2 Basic set	01500180
	+	Adapter plate for iBox universal 2	13588000
Option 2		iBox universal Basic set	01800180

Logis 2-handle shower mixer for exposed installation

Features

- 1 function
- centre distance: 150 ± 12 mm
- maximum flow rate at 3 bar: 17 l/min
- flow rate of hand shower at 3 bar: 17 l/min
- ceramic valves hot/cold 90°
- non-return valve
- with silencer
- suitable for continous flow water heaters
- hose connection DN15
- min. operating pressure: 1 bar
- max. operating pressure: 10 bar
- connection type: S-connections

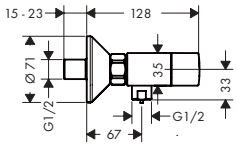

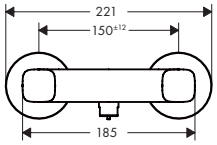

Finish	Code no.
Chrome	71263000

Logis Single lever shower mixer HighFlow for concealed installation for iBox universal

Features

- 1 function
- maximum flow rate at 3 bar: 47 l/min
- ceramic cartridge (Highflow)
- temperature limitation adjustable
- min. operating pressure: 1 bar
- max. operating pressure: 10 bar

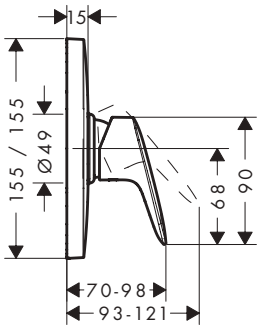

Finish	Code no.
Chrome	71607000

Required parts (choose one):			Code no.
Option 1		iBox universal 2 Basic set	01500180
	+	Adapter plate for iBox universal 2	13588000
Option 2		iBox universal Basic set	01800180

Logis Single lever shower mixers for concealed installation

Features of all variants

- 1 function
- maximum flow rate at 3 bar: 28,7 l/min
- min. operating pressure: 1 bar
- max. operating pressure: 10 bar
- connection type: basic set

Certificates/declarations

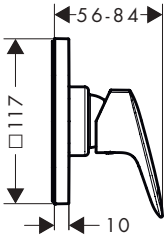

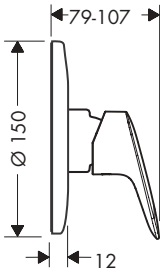

Overview variants

Shape	Finish	Code no.
softcube	Chrome	71604000
round	Chrome	71606000

Required parts:	Code no.
Basic set for single lever shower mixer for concealed installation	13620180

Measurements within scale drawings are in mm.
Technical specifications and units of measure are subject to change.

Logis Shower mixer set for concealed installation

Features

- consists of: single lever shower mixer, basic set
- 1 function
- maximum flow rate at 3 bar: 27 l/min
- ceramic cartridge
- connection type: basic set

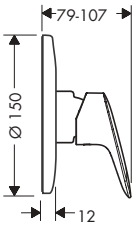

Certificates/declarations

Finish	Code no.
Chrome	71666000

Logis Shut-off valve for concealed installation

Features

- connection type: DN15/DN20
- noise class: II

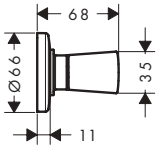

Finish	Code no.
Chrome	71970000

Required parts (choose one):		Code no.
	Basic set 40 l/min for shut-off valve for concealed installation ceramic	15974180
	Basic set 52 l/min for shut-off valve for concealed installation spindle	15973180
	Basic set 130 l/min for shut-off valve for concealed installation spindle	15970180

Optional parts:		Code no.
	Extension set 2.5 cm	96370000

Vernis

Vernis Blend Single lever basin mixers

Features of all variants

- handle variant: lever handle
- spray type: normal spray
- swiveling spray former
- maximum flow rate at 3 bar: 5 l/min
- ceramic cartridge
- suitable for continuous flow water heaters
- connection type: G ⅜ hose connections
- connection dimension: DN15
- EU taxonomy: max. 6 l/min - Substantial Contribution (SC) possible

70

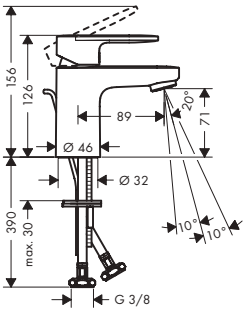

100

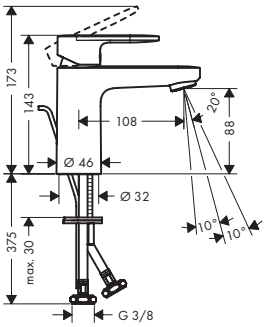

190

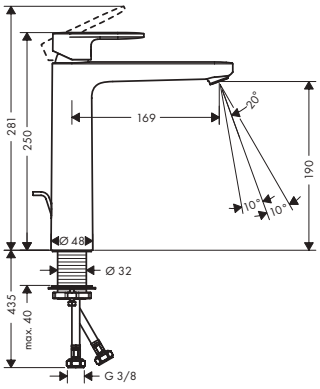

Sustainability

CoolStart, EcoSmart

Technologies

AirPower, Comfort Zone

Certificates/declarations

EPD

Overview variants

ComfortZone	Projection (mm)	Spout height (mm)	Waste set	Material waste set	CoolStart	Finish	Code no.
70	89	71	pop-up	synthetic	■	Chrome	71584000
						Matt Black	71584670
70	89	71	push-open	synthetic	■	Chrome	71598000
						Matt Black	71598670
70	89	71	pop-up	metal	–	Chrome	71557000
70	89	71	pop-up	synthetic	–	Chrome	71550000
						Matt Black	71550670
70	89	71	without	–	–	Chrome	71558000
						Matt Black	71558670
100	108	88	pop-up	synthetic	■	Chrome	71585000
						Matt Black	71585670
100	108	88	push-open	synthetic	■	Chrome	71589000
						Matt Black	71589670
100	108	88	pop-up	metal	–	Chrome	71559000
100	108	88	pop-up	synthetic	–	Chrome	71551000
						Matt Black	71551670
100	108	88	without	–	–	Chrome	71580000
						Matt Black	71580670
190	169	190	pop-up	synthetic	–	Chrome	71552000
						Matt Black	71552670

Measurements within scale drawings are in mm.
Technical specifications and units of measure are subject to change.

Vernis Blend Single lever basin mixers

Overview variants

ComfortZone	Projection (mm)	Spout height (mm)	Waste set	Material waste set	CoolStart	Finish	Code no.
190	169	190	pop-up	metal	–	Chrome	71581000
190	169	190	without	–	–	Chrome	71582000
						Matt Black	71582670

Vernis Blend Single lever basin mixers project packs

Features of all variants

- consists of: single lever basin mixer, waste set
- handle variant: lever handle
- spray type: normal spray
- swiveling spray former
- maximum flow rate at 3 bar: 5 l/min
- ceramic cartridge
- temperature limitation adjustable
- suitable for continuous flow water heaters
- pop-up waste set G 1¼
- material waste set: synthetic
- connection type: G ⅜ hose connections
- connection dimension: DN15
- packaging unit: 6 pieces
- EU taxonomy: max. 6 l/min - Substantial Contribution (SC) possible

70

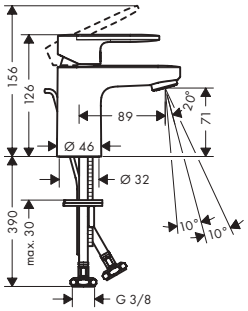

100

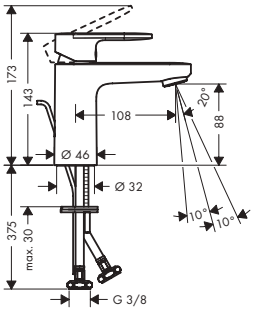

Sustainability

Technologies

Overview variants

ComfortZone	Projection (mm)	Spout height (mm)	Waste set	CoolStart	Finish	Code no.
70	89	71	pop-up	■	Chrome	71599000
70	89	71	pop-up	–	Chrome	71587000
100	108	88	pop-up	–	Chrome	71588000

Measurements within scale drawings are in mm.
Technical specifications and units of measure are subject to change.

Vernis Blend Single lever basin mixers with isolated water conduction

Features of all variants

- consists of: single lever basin mixer, waste set
- handle variant: lever handle
- spray type: normal spray
- swiveling spray former
- maximum flow rate at 3 bar: 5 l/min
- ceramic cartridge
- temperature limitation adjustable
- with isolated water conduction - without contact with nickel and lead
- suitable for continuous flow water heaters
- pop-up waste set G 1¼
- material waste set: synthetic
- connection type: G ⅜ hose connections
- connection dimension: DN15
- EU taxonomy: max. 6 l/min - Substantial Contribution (SC) possible

70

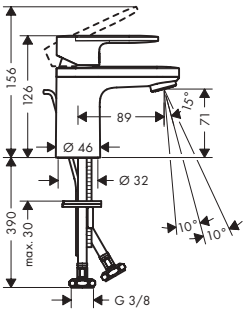

100

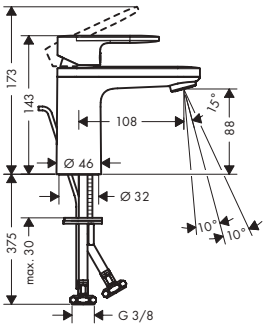

190

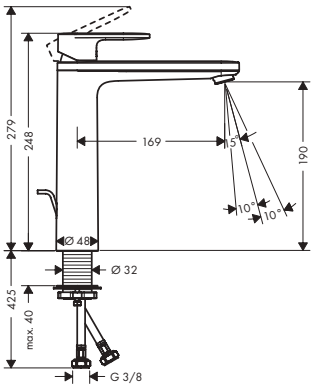

Sustainability

EcoSmart

Technologies

AirPower

Comfort Zone

Certificates/declarations

EPD

Overview variants

ComfortZone	Projection (mm)	Spout height (mm)	Waste set	Finish	Code no.
70	89	71	pop-up	Chrome	71570000
100	108	88	pop-up	Chrome	71571000
190	169	190	pop-up	Chrome	71572000

Measurements within scale drawings are in mm.
Technical specifications and units of measure are subject to change.

Vernis Blend Pillar tap 70 with lever handle for cold water or pre-adjusted water without waste set

Features

- ComfortZone: 70
- projection: 93 mm
- spout height: 59 mm
- handle variant: lever handle
- spray type: normal spray
- maximum flow rate at 3 bar: 5 l/min
- ceramic valves 90°
- for cold water connection
- connection type: G ⅜ hose connections
- connection dimension: DN15
- EU taxonomy: max. 6 l/min - Substantial Contribution (SC) possible

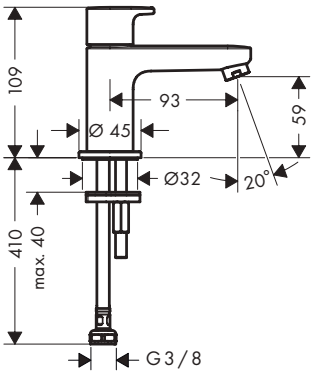

Sustainability

Technologies

Certificates/declarations

Finish	Code no.
Chrome	71583000
Matt Black	71583670

Vernis Blend Single lever basin mixer with swivel spout and pop-up waste set

Features

- consists of: single lever basin mixer, waste set
- ComfortZone: 200
- projection: 166 mm
- spout height: 200 mm
- handle variant: lever handle
- swivel range adjustable in 2 steps 120° or 360°
- spray type: laminar spray
- maximum flow rate at 3 bar: 5 l/min
- ceramic cartridge
- suitable for continuous flow water heaters
- pop-up waste set G 1¼
- material waste set: synthetic
- connection type: G ⅜ hose connections
- connection dimension: DN15
- EU taxonomy: max. 6 l/min - Substantial Contribution (SC) possible

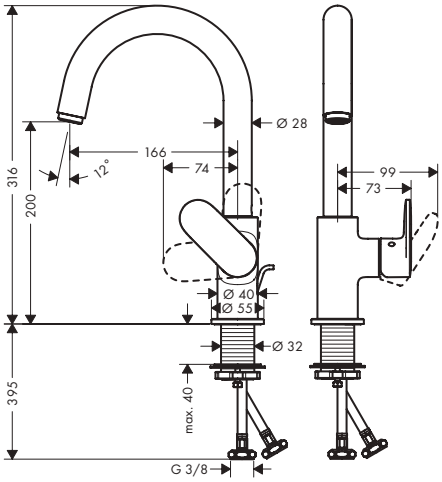

Sustainability

Technologies

Finish	Code no.
Chrome	71554000

Vernis Blend 3-hole basin mixer with pop-up waste set

Features

- consists of: 3-hole basin mixer, waste set
- ComfortZone: 150
- projection: 166 mm
- spout height: 151 mm
- handle variant: lever handle
- spray type: laminar spray
- maximum flow rate at 3 bar: 5 l/min
- ceramic valves hot/cold 90°
- suitable for continuous flow water heaters
- pop-up waste set G 1¼
- material waste set: synthetic
- connection type: G ⅜ hose connections
- connection dimension: DN15
- EU taxonomy: max. 6 l/min - Substantial Contribution (SC) possible

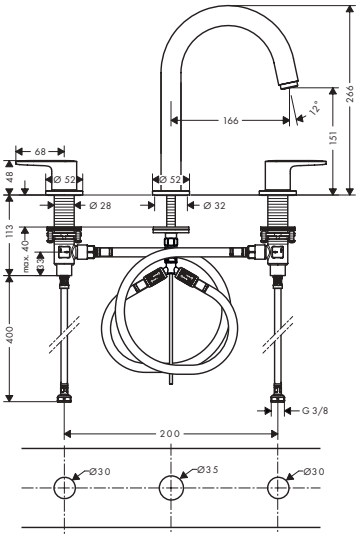

Sustainability

EcoSmart

Technologies

Comfort Zone

Finish	Code no.
Chrome	71553000
Matt Black	71553670

Vernis Blend Single lever basin mixer for concealed installation wall-mounted with spout 20,7 cm

Features

- projection: 207 mm
- handle variant: lever handle
- spray type: normal spray
- maximum flow rate at 3 bar: 5 l/min
- ceramic cartridge
- suitable for continuous flow water heaters
- connection type: basic set
- connection dimension: DN15
- handle can be positioned on the right or left, depending on the basic set installation
- EU taxonomy: max. 6 l/min - Substantial Contribution (SC) possible

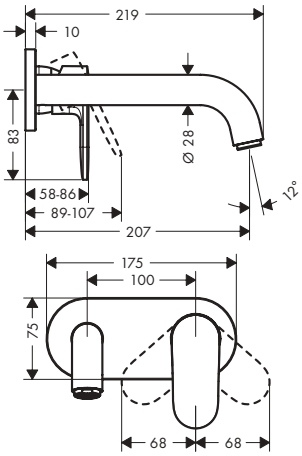

Sustainability

EcoSmart

Technologies

AirPower

Finish	Code no.
Chrome	71576000
Matt Black	71576670

Required parts:		Code no.
	Basic set for single lever basin mixer for concealed installation wall-mounted	13622180

Measurements within scale drawings are in mm.
Technical specifications and units of measure are subject to change.

Vernis Blend Electronic basin mixers

Features of all variants

- ComfortZone 100
- projection: 112 mm
- spray type: normal spray
- swiveling spray former
- maximum flow rate at 3 bar: 5 l/min
- temperature pre-adjustable
- with isolated water conduction - without contact with nickel and lead
- non-return valve
- infrared sensor technology
- automatic environmental adjustment of infrared sensor
- running time adjustable
- running time: 10 s, 20 s, 30 s
- hygiene rinse activatable (automatic water flow)
- frequency of hygiene rinse: 24 h, 48 h, 72 h
- flushing time hygiene rinse: 10 s, 20 s, 30 s
- permanent rinse activatable (single water flow for 200 seconds, suitable for thermal disinfection)
- cleaning mode: manual water stop for washbasin cleaning
- connection dimension: DN15
- dirt filters in the connection hoses
- frequency of hygiene rinse and flushing time hygiene rinse are dependent on each other (24 h - 10 s, 48 h - 20 s, 72 h - 30 s)

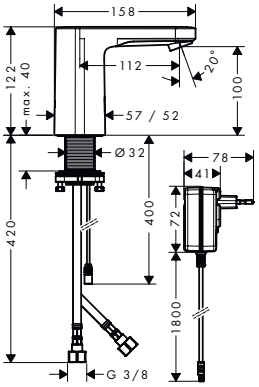

Sustainability

EcoSmart

Technologies

AirPower | Comfort Zone | Sensor Activation

Overview variants

Power supply	Temperature adjustment	Finish	Code no.
battery operation	pre adjustable	Chrome	71502000
mains connection	pre adjustable	Chrome	71501000

Vernis Blend Electronic basin mixers for cold water or pre-adjusted water

Features of all variants

- ComfortZone 100
- projection: 112 mm
- spray type: normal spray
- swiveling spray former
- maximum flow rate at 3 bar: 5 l/min
- for cold water or pre-adjusted/conditioned water
- with isolated water conduction - without contact with nickel and lead
- suitable for continous flow water heaters
- infrared sensor technology
- automatic environmental adjustment of infrared sensor
- running time adjustable
- running time: 10 s, 20 s, 30 s
- hygiene rinse activatable (automatic water flow)
- frequency of hygiene rinse: 24 h, 48 h, 72 h
- flushing time hygiene rinse: 10 s, 20 s, 30 s
- permanent rinse activatable (single water flow for 200 seconds, suitable for thermal disinfection)
- cleaning mode: manual water stop for washbasin cleaning
- connection dimension: DN15
- dirt filter in the connection hose
- frequency of hygiene rinse and flushing time hygiene rinse are dependent on each other (24 h - 10 s, 48 h - 20 s, 72 h - 30 s)

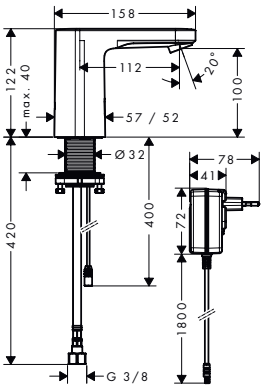

Sustainability

EcoSmart

Technologies

AirPower | Comfort Zone | Sensor Activation

Overview variants

Power supply	Temperature adjustment	Finish	Code no.
battery operation	for cold water or pre-adjusted/conditioned water	Chrome	71503000
mains connection	for cold water or pre-adjusted/conditioned water	Chrome	71504000

Measurements within scale drawings are in mm.
Technical specifications and units of measure are subject to change.

Vernis Blend Single lever basin mixer 100 with bidette hand shower and shower hose 160 cm

Features

- consists of: single lever basin mixer, bidette hand shower, shower holder, shower hose
- ComfortZone: 100
- projection: 108 mm
- spout height: 88 mm
- handle variant: lever handle
- spray type: normal spray, shower spray
- maximum flow rate at 3 bar: 5 l/min
- ceramic cartridge
- temperature limitation adjustable
- connection type: G ⅜ hose connections
- connection dimension: DN15
- EU taxonomy: max. 6 l/min - Substantial Contribution (SC) possible

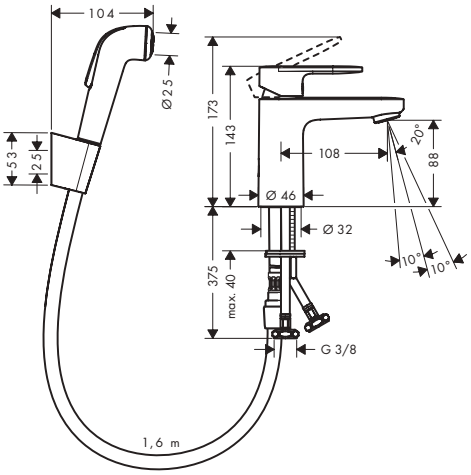

Sustainability

Technologies

Finish	Code no.
Chrome	71215000

Vernis Blend Single lever bidet mixers

Features of all variants

- consists of: single lever bidet mixer, waste set
- projection: 127 mm
- spout height: 80 mm
- aerator with ball pivot
- spray type: normal spray
- maximum flow rate at 3 bar: 5 l/min
- ceramic cartridge
- suitable for continous flow water heaters
- pop-up waste set G 1¼
- connection type: G ⅜ hose connections
- connection dimension: DN15
- EU taxonomy: max. 6 l/min - Substantial Contribution (SC) possible

80

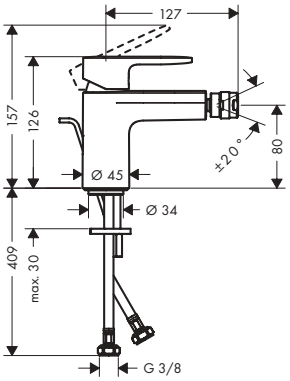

Sustainability

Technologies

Overview variants

Waste set	Material waste set	Finish	Code no.
pop-up	synthetic	Chrome	71210000
		Matt Black	71210670
pop-up	metal	Chrome	71218000
		Matt Black	71218670

Measurements within scale drawings are in mm.
Technical specifications and units of measure are subject to change.

Vernis Blend Bidet set with vertical spray

Features

- consists of: Bidet mixer, vertical spray
- spout height: 116 mm
- maximum flow rate at 3 bar: 7,7 l/min
- ceramic cartridge
- vertical spray and diverter
- integrated non-return valve
- efficient from 0,5 bar onwards
- connection type: G ⅜ hose connections
- connection dimension: DN15

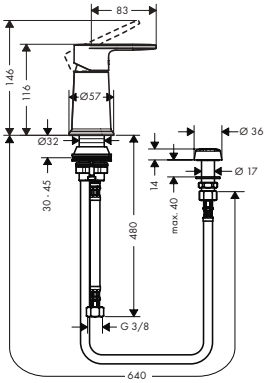

Sustainability

Technologies

Finish	Code no.
Chrome	71214000

Vernis Blend Single lever bath mixer for exposed installation

Features

- 2 functions
- projection: 171 mm
- centre distance: 150 ± 12 mm
- spray type mixer: normal spray
- maximum flow rate at 3 bar: 22,5 l/min
- flow rate for bath spout at 3 bar: 22,5 l/min
- flow rate of hand shower at 3 bar: 15,7 l/min
- ceramic cartridge
- temperature limitation adjustable
- diverter with automatic resetting
- with silencer
- suitable for continous flow water heaters
- connection dimension: DN15
- connection type: S-connections
- wall-mounted
- min. operating pressure: 1 bar
- max. operating pressure: 10 bar

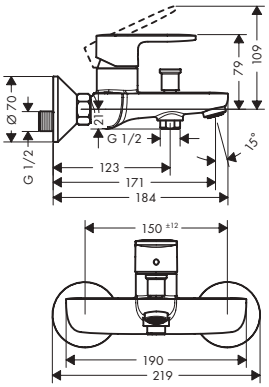

Technologies

Certificates/declarations

Finish	Code no.
Chrome	71440000
Matt Black	71440670

Measurements within scale drawings are in mm.
Technical specifications and units of measure are subject to change.

Vernis Blend Single lever bath mixer for exposed installation with 2 flow rates

Features

- 2 functions
- projection: 171 mm
- centre distance: 150 ± 12 mm
- spray type mixer: normal spray
- maximum flow rate at 3 bar: 22,4 l/min
- flow rate for bath spout at 3 bar: 22,4 l/min
- flow rate of hand shower at 3 bar: 15,9 l/min
- ceramic cartridge with Eco handle position for 2 flow rates
- temperature limitation adjustable
- diverter with automatic resetting
- with silencer
- suitable for continous flow water heaters
- connection dimension: DN15
- connection type: S-connections
- wall-mounted
- min. operating pressure: 1 bar
- max. operating pressure: 10 bar

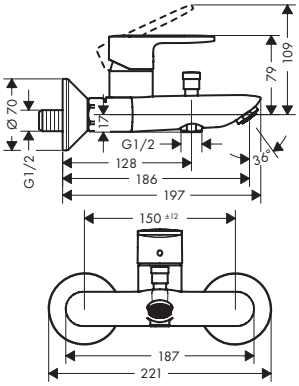

Sustainability

Eco Selection

Technologies

AirPower

Finish	Code no.
Chrome	71454000

Vernis Blend Single lever bath mixer for exposed installation projects pack (6 pcs.)

Features

- 2 functions
- projection: 171 mm
- centre distance: 150 ± 12 mm
- spray type mixer: normal spray
- maximum flow rate at 3 bar: 22,5 l/min
- flow rate for bath spout at 3 bar: 22,5 l/min
- flow rate of hand shower at 3 bar: 15,7 l/min
- ceramic cartridge
- temperature limitation adjustable
- diverter with automatic resetting
- with silencer
- suitable for continous flow water heaters
- connection dimension: DN15
- connection type: S-connections
- wall-mounted
- min. operating pressure: 1 bar
- max. operating pressure: 10 bar
- packaging unit: 6 pieces

6x

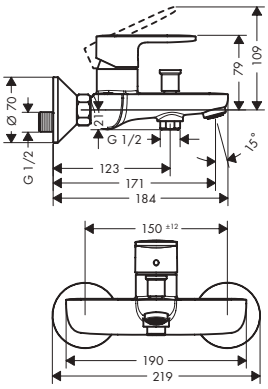

Technologies

AirPower

Finish	Code no.
Chrome	71447000

Measurements within scale drawings are in mm.
Technical specifications and units of measure are subject to change.

Vernis Blend Single lever bath mixers for concealed installation for iBox universal

Features of all variants

- 2 functions
- ceramic cartridge
- temperature limitation adjustable
- diverter with automatic resetting
- suitable for continous flow water heaters
- connection type: basic set
- wall-mounted
- min. operating pressure: 1 bar
- max. operating pressure: 10 bar

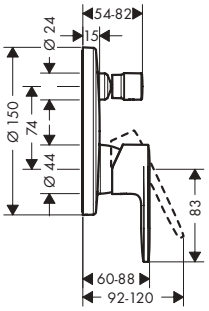

Certificates/declarations

Overview variants

Security combination EN 1717	Max. flow rate at 3 bar (l/min)	Finish	Code no.
–	29	Chrome	71466000
		Matt Black	71466670
■	25	Chrome	71467000
		Matt Black	71467670

Vernis Blend Single lever bath mixer for concealed installation

Features

- 2 functions
- maximum flow rate at 3 bar: 30,7 l/min
- flow rate for bath spout at 3 bar: 30,7 l/min
- flow rate of hand shower at 3 bar: 27,4 l/min
- temperature limitation adjustable
- diverter with automatic resetting
- connection type: basic set
- wall-mounted
- min. operating pressure: 1 bar
- max. operating pressure: 10 bar

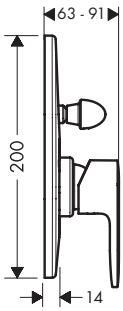

Finish	Code no.
Chrome	71449000
Matt Black	71449670

Required parts:	Code no.
Basic set for single lever bath mixer for concealed installation	31741180

Vernis Blend Bath mixer set for concealed installation

Features

- consists of: Single lever bath mixer, basic set
- 2 functions
- maximum flow rate at 3 bar: 30 l/min
- ceramic cartridge
- temperature limitation adjustable
- diverter with automatic resetting
- suitable for continous flow water heaters
- connection type: basic set
- wall-mounted
- min. operating pressure: 1 bar
- max. operating pressure: 10 bar

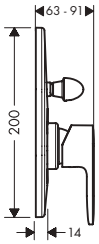

Finish	Code no.
Chrome	71473000
Matt Black	71473670

Vernis Blend Bath spout

Features

- 1 function
- with escutcheon
- projection: 204 mm
- wall-mounted
- maximum flow rate at 3 bar: 21,7 l/min
- connection dimension: G ½
- spray type: normal spray

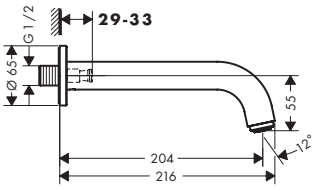

Technologies

AirPower

Finish	Code no.
Chrome	71420000
Matt Black	71420670

Optional parts:		Code no.
	Connecting thread G ¾	92504000

Measurements within scale drawings are in mm.
Technical specifications and units of measure are subject to change.

Vernis Blend 4-hole rim mounted bath mixer

Features

- consists of: 4-hole rim mounted bath mixer, hand shower
- 2 functions
- projection: 211 mm
- spray type mixer: normal spray
- spray type hand shower: Rain, IntenseRain
- maximum pull-out length of hand shower: 1.60 m
- maximum flow rate at 3 bar: 25 l/min
- flow rate for bath spout at 3 bar: 25 l/min
- flow rate of hand shower at 3 bar: 17 l/min
- ceramic valves hot/cold 90°
- non-return valve
- suitable for continous flow water heaters
- connection dimension: DN15
- connection type: G ½
- installation on bath rim
- maintenance opening required

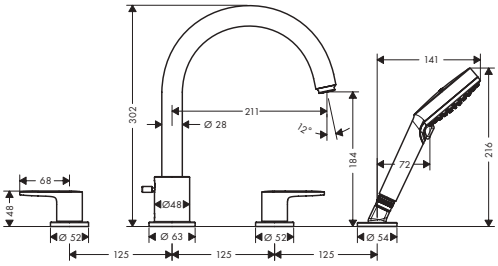

Technologies

AirPower

Spray types

Intense Rain

Rain

Finish	Code no.
Chrome	71456000
Matt Black	71456670

Required parts:	Code no.
Basic set for 4-hole rim mounted bath mixer	13244180

Vernis Blend 2-hole rim mounted bath mixer with diverter valve and Vernis Blend hand shower Vario

Features

- consists of: 2-hole rim mounted bath mixer, hand shower, shower holder, shower hose
- 2 functions
- projection: 110 mm
- centre distance: 180 mm
- maximum flow rate at 3 bar: 49,3 l/min
- flow rate for bath spout at 3 bar: 49,3 l/min
- flow rate of hand shower at 3 bar: 18,1 l/min
- ceramic valves hot/cold 90°
- operating pressure from 0.2 bar
- diverter with automatic resetting
- diverter lockable
- non-return valve
- with silencer
- connection dimension: DN20
- connection type: G ¾
- installation on bath rim

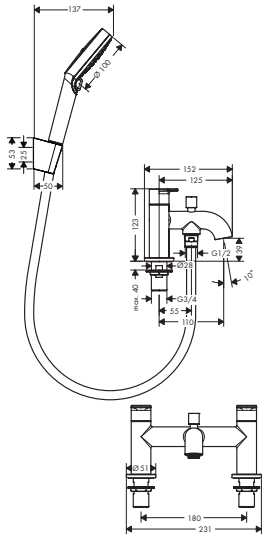

Finish	Code no.
Chrome	71461000
Matt Black	71461670

Vernis Blend 2-hole rim mounted bath mixer

Features

- 1 function
- projection: 110 mm
- centre distance: 180 mm
- maximum flow rate at 3 bar: 50 l/min
- ceramic valves hot/cold 90°
- operating pressure from 0.2 bar
- connection dimension: DN20
- connection type: G ¾
- installation on bath rim
- min. operating pressure: 1 bar
- max. operating pressure: 10 bar

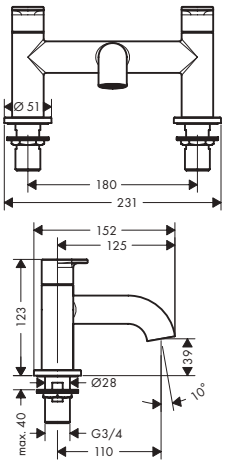

Certificates/declarations

Finish	Code no.
Chrome	71442000
Matt Black	71442670

Vernis Blend Single lever bath and shower mixer Monotrou

Features

- 2 functions
- projection: 140 mm
- spray type mixer: normal spray
- maximum flow rate at 3 bar: 20 l/min
- flow rate for bath spout at 3 bar: 20 l/min
- flow rate of hand shower at 3 bar: 14 l/min
- ceramic cartridge
- temperature limitation adjustable
- diverter with automatic resetting
- protected against backflow, according to DIN EN 1717
- suitable for continous flow water heaters
- connection dimension: DN15
- connection type: G ⅜ hose connections
- installation on bath rim
- min. operating pressure: 1 bar
- max. operating pressure: 10 bar

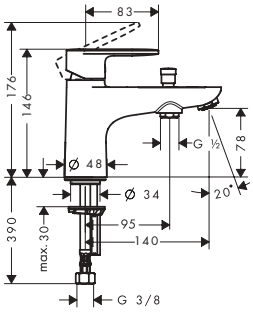

Finish	Code no.
Chrome	71444000

Measurements within scale drawings are in mm.
Technical specifications and units of measure are subject to change.

Vernis Blend Single lever bath and shower mixer Monotrou with 2 flow rates

Features

- 2 functions
- projection: 140 mm
- spray type mixer: normal spray
- maximum flow rate at 3 bar: 20 l/min
- ceramic cartridge with Eco handle position for 2 flow rates
- temperature limitation adjustable
- diverter with automatic resetting
- protected against backflow, according to DIN EN 1717
- suitable for continous flow water heaters
- connection dimension: DN15
- connection type: G ⅜ hose connections
- installation on bath rim
- min. operating pressure: 1 bar
- max. operating pressure: 10 bar
- no additional maintenance opening required

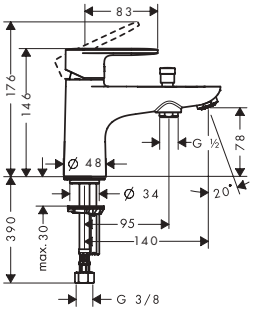

Sustainability

Finish	Code no.
Chrome	71446000

Vernis Blend Single lever bath mixer Monotrou

Features

- 1 function
- projection: 130 mm
- spray type mixer: normal spray
- maximum flow rate at 3 bar: 20 l/min
- ceramic cartridge
- temperature limitation adjustable
- connection dimension: DN15
- connection type: G ⅜ hose connections
- installation on bath rim
- min. operating pressure: 1 bar
- max. operating pressure: 10 bar

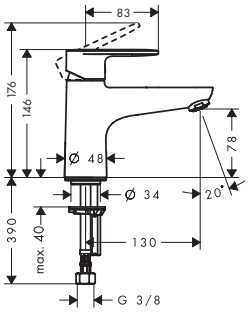

Finish	Code no.
Chrome	71443000

Vernis Blend Single lever shower mixer for exposed installation

Features

- 1 function
- centre distance: 150 ± 12 mm
- maximum flow rate at 3 bar: 28 l/min
- flow rate of hand shower at 3 bar: 16 l/min
- ceramic cartridge
- temperature limitation adjustable
- non-return valve
- with silencer
- suitable for continous flow water heaters
- hose connection DN15
- connection dimension: DN15
- min. operating pressure: 1 bar
- max. operating pressure: 10 bar
- connection type: S-connections

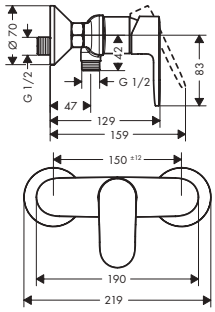

Certificates/declarations

Finish	Code no.
Chrome	71640000
Matt Black	71640670

Vernis Blend Single lever shower mixer for exposed installation with 2 flow rates

Features

- 1 function
- maximum flow rate at 3 bar: 30 l/min
- flow rate of hand shower at 3 bar: 15,2 l/min
- ceramic cartridge with Eco handle position for a reduced flowrate by up to 50%
- temperature limitation adjustable
- non-return valve
- with silencer
- suitable for continous flow water heaters
- hose connection DN15
- connection dimension: DN15
- min. operating pressure: 1 bar
- max. operating pressure: 10 bar
- connection type: S-connections

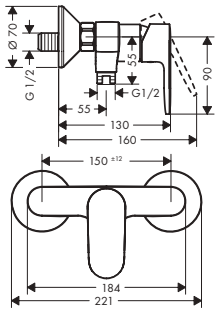

Sustainability

Certificates/declarations

Finish	Code no.
Chrome	71646000

Measurements within scale drawings are in mm.
Technical specifications and units of measure are subject to change.

Vernis Blend Single lever shower mixer for exposed installation projects pack (6 pcs.)

Features

- 1 function
- flow rate of hand shower at 3 bar: 15,7 l/min
- ceramic cartridge
- temperature limitation adjustable
- non-return valve
- with silencer
- suitable for continous flow water heaters
- hose connection DN15
- connection dimension: DN15
- min. operating pressure: 1 bar
- max. operating pressure: 10 bar
- packaging unit: 6 pieces
- connection type: S-connections

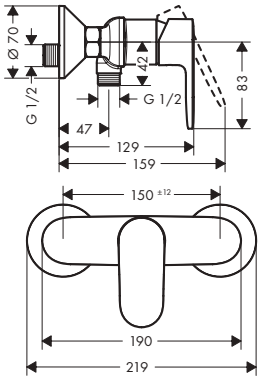

Finish	Code no.
Chrome	71647000

Vernis Blend Single lever shower mixer for concealed installation for iBox universal

Features

- 1 function
- maximum flow rate at 3 bar: 29,3 l/min
- ceramic cartridge
- temperature limitation adjustable
- min. operating pressure: 1 bar
- max. operating pressure: 10 bar
- connection type: basic set

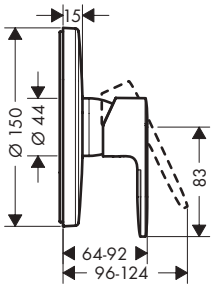

Finish	Code no.
Chrome	71667000
Matt Black	71667670

Measurements within scale drawings are in mm.
Technical specifications and units of measure are subject to change.

Vernis Blend Single lever shower mixer for concealed installation

Features

- 1 function
- maximum flow rate at 3 bar: 28,7 l/min
- ceramic cartridge
- temperature limitation adjustable
- min. operating pressure: 1 bar
- max. operating pressure: 10 bar
- connection type: basic set

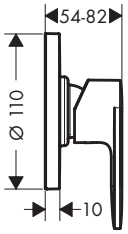

Finish	Code no.
Chrome	71649000
Matt Black	71649670

Required parts:	Code no.
Basic set for single lever shower mixer for concealed installation	13620180

Vernis Blend Shower mixer set for concealed installation

Features

- consists of: single lever shower mixer, basic set
- 1 function
- maximum flow rate at 3 bar: 28,7 l/min
- ceramic cartridge
- temperature limitation adjustable
- min. operating pressure: 1 bar
- max. operating pressure: 10 bar
- connection type: basic set

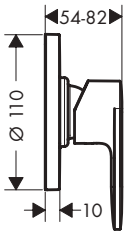

Finish	Code no.
Chrome	71663000
Matt Black	71663670

Measurements within scale drawings are in mm.
Technical specifications and units of measure are subject to change.

Vernis Shape Single lever basin mixers with isolated water conduction

Features of all variants

- handle variant: lever handle
- spray type: normal spray
- maximum flow rate at 3 bar: 5 l/min
- ceramic cartridge
- with isolated water conduction - without contact with nickel and lead
- suitable for continuous flow water heaters
- connection type: G ⅜ hose connections
- connection dimension: DN15
- EU taxonomy: max. 6 l/min - Substantial Contribution (SC) possible

70

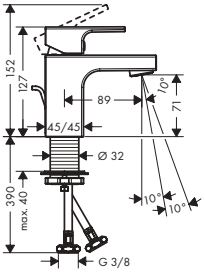

100

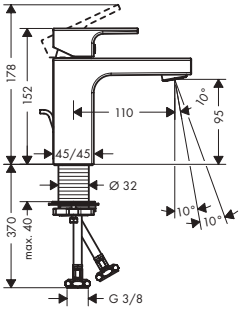

190

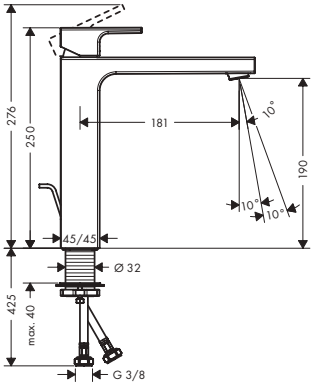

Sustainability

CoolStart, EcoSmart

Technologies

AirPower, Comfort Zone

Certificates/declarations

EPD

Overview variants

ComfortZone	Projection (mm)	Spout height (mm)	Waste set	Material waste set	CoolStart	Finish	Code no.
70	89	71	pop-up	synthetic	■	Chrome	71593000
						Matt Black	71593670
70	89	71	pop-up	synthetic	–	Chrome	71560000
						Matt Black	71560670
70	89	71	pop-up	metal	–	Chrome	71566000
70	89	71	without	–	–	Chrome	71567000
						Matt Black	71567670
100	110	95	pop-up	synthetic	■	Chrome	71594000
						Matt Black	71594670
100	110	95	pop-up	synthetic	–	Chrome	71561000
						Matt Black	71561670
100	110	95	pop-up	metal	–	Chrome	71568000
100	110	95	without	–	–	Chrome	71569000
						Matt Black	71569670
190	181	190	pop-up	synthetic	–	Chrome	71562000
						Matt Black	71562670
190	181	190	pop-up	metal	–	Chrome	71590000
190	181	190	without	–	–	Chrome	71591000
						Matt Black	71591670

Measurements within scale drawings are in mm.
Technical specifications and units of measure are subject to change.

Vernis Shape Pillar tap 70 with lever handle for cold water or pre-adjusted water without waste set

Features

- ComfortZone: 70
- projection: 92 mm
- spout height: 63 mm
- handle variant: lever handle
- spray type: normal spray
- maximum flow rate at 3 bar: 5 l/min
- ceramic cartridge
- for cold water connection
- connection type: G ⅜ hose connections
- connection dimension: DN15
- EU taxonomy: max. 6 l/min - Substantial Contribution (SC) possible

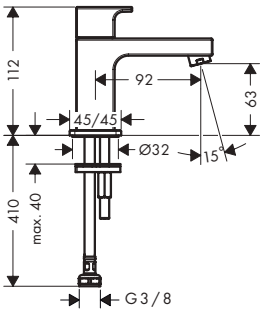

Sustainability

Technologies

Certificates/declarations

Finish	Code no.
Chrome	71592000
Matt Black	71592670

Vernis Shape Single lever basin mixer with swivel spout and pop-up waste set

Features

- consists of: single lever basin mixer, waste set
- ComfortZone: 200
- projection: 166 mm
- spout height: 200 mm
- handle variant: lever handle
- swivel range 120°
- spray type: laminar spray
- maximum flow rate at 3 bar: 5 l/min
- ceramic cartridge
- suitable for continuous flow water heaters
- pop-up waste set G 1¼
- material waste set: synthetic
- connection type: G ⅜ hose connections
- connection dimension: DN15
- EU taxonomy: max. 6 l/min - Substantial Contribution (SC) possible

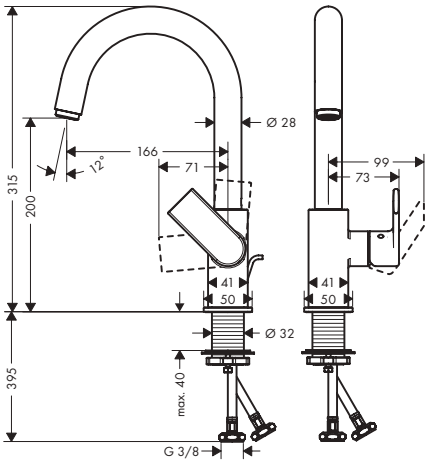

Sustainability

Technologies

Finish	Code no.
Chrome	71564000

Measurements within scale drawings are in mm.
Technical specifications and units of measure are subject to change.

Vernis Shape 3-hole basin mixer with pop-up waste set

Features

- consists of: 3-hole basin mixer, waste set
- ComfortZone: 150
- projection: 166 mm
- spout height: 151 mm
- handle variant: lever handle
- spray type: laminar spray
- maximum flow rate at 3 bar: 5 l/min
- ceramic valves hot/cold 90°
- suitable for continuous flow water heaters
- pop-up waste set G 1¼
- material waste set: synthetic
- connection type: G ⅜ hose connections
- connection dimension: DN15
- EU taxonomy: max. 6 l/min - Substantial Contribution (SC) possible

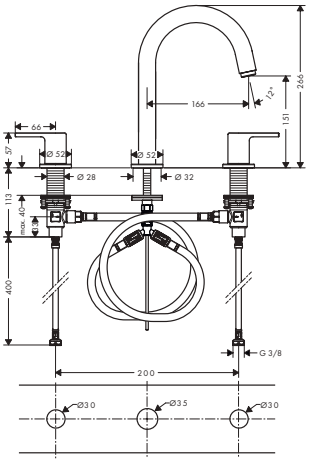

Sustainability

EcoSmart

Technologies

Comfort Zone

Finish	Code no.
Chrome	71563000
Matt Black	71563670

Vernis Shape Single lever basin mixer for concealed installation wall-mounted with spout 20,7 cm

Features

- projection: 207 mm
- handle variant: lever handle
- spray type: normal spray
- maximum flow rate at 3 bar: 5 l/min
- ceramic cartridge
- suitable for continuous flow water heaters
- connection type: basic set
- connection dimension: DN15
- handle can be positioned on the right or left, depending on the basic set installation
- EU taxonomy: max. 6 l/min - Substantial Contribution (SC) possible

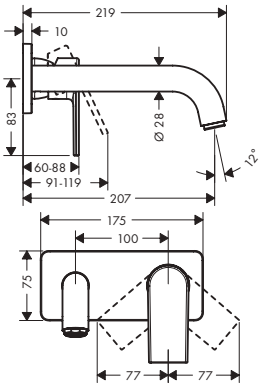

Sustainability

EcoSmart

Technologies

AirPower

Finish	Code no.
Chrome	71578000
Matt Black	71578670

Required parts:		Code no.
	Basic set for single lever basin mixer for concealed installation wall-mounted	13622180

Vernis Shape Single lever basin mixer 100 with bidette hand shower and shower hose 160 cm

Features

- consists of: single lever basin mixer, bidette hand shower, shower holder, shower hose
- ComfortZone: 100
- projection: 110 mm
- spout height: 92 mm
- handle variant: lever handle
- spray type: normal spray, shower spray
- maximum flow rate at 3 bar: 5 l/min
- ceramic cartridge
- temperature limitation adjustable
- with isolated water conduction - without contact with nickel and lead
- connection type: G ⅜ hose connections
- connection dimension: DN15
- EU taxonomy: max. 6 l/min - Substantial Contribution (SC) possible

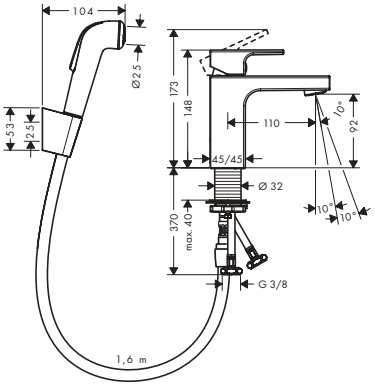

Sustainability

Technologies

Finish	Code no.
Chrome	71216000

Vernis Shape Single lever bidet mixers

Features of all variants

- consists of: single lever bidet mixer, waste set
- projection: 124 mm
- spout height: 78 mm
- aerator with ball pivot
- spray type: normal spray
- maximum flow rate at 3 bar: 4,8 l/min
- ceramic cartridge
- suitable for continous flow water heaters
- pop-up waste set G 1¼
- connection type: G ⅜ hose connections
- connection dimension: DN15
- EU taxonomy: max. 6 l/min - Substantial Contribution (SC) possible

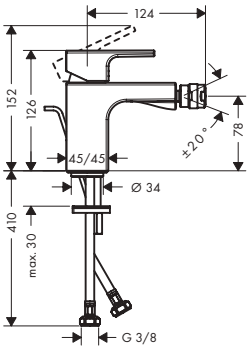

Sustainability

Technologies

Certificates/declarations

Overview variants

Waste set	Material waste set	Finish	Code no.
pop-up	synthetic	Chrome	71211000
		Matt Black	71211670
pop-up	metal	Chrome	71219000
		Matt Black	71219670

Measurements within scale drawings are in mm.
Technical specifications and units of measure are subject to change.

Vernis Shape Single lever bath mixer for exposed installation

Features

- 2 functions
- projection: 166 mm
- centre distance: 150 ± 12 mm
- spray type mixer: normal spray
- maximum flow rate at 3 bar: 22,5 l/min
- flow rate for bath spout at 3 bar: 22,5 l/min
- flow rate of hand shower at 3 bar: 15,7 l/min
- ceramic cartridge
- temperature limitation adjustable
- diverter with automatic resetting
- with silencer
- suitable for continous flow water heaters
- connection dimension: DN15
- connection type: S-connections
- wall-mounted
- min. operating pressure: 1 bar
- max. operating pressure: 10 bar

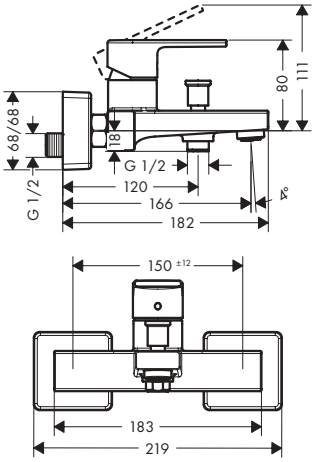

Technologies

AirPower

Finish	Code no.
Chrome	71450000
Matt Black	71450670

Vernis Shape Single lever bath mixer for exposed installation with 2 flow rates

Features

- 2 functions
- projection: 166 mm
- centre distance: 150 ± 12 mm
- spray type mixer: normal spray
- maximum flow rate at 3 bar: 22,5 l/min
- flow rate for bath spout at 3 bar: 22,5 l/min
- flow rate of hand shower at 3 bar: 15,9 l/min
- ceramic cartridge with Eco handle position for 2 flow rates
- temperature limitation adjustable
- diverter with automatic resetting
- non-return valve
- with silencer
- suitable for continous flow water heaters
- connection dimension: DN15
- connection type: S-connections
- wall-mounted
- min. operating pressure: 1 bar
- max. operating pressure: 10 bar
- no additional maintenance opening required

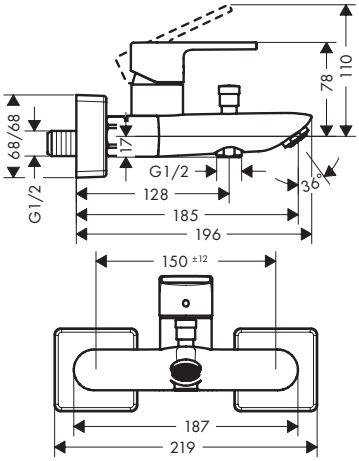

Sustainability

Eco Selection

Technologies

AirPower

Certificates/declarations

EPD

Finish	Code no.
Chrome	71453000

Measurements within scale drawings are in mm.
Technical specifications and units of measure are subject to change.

Vernis Shape Single lever bath mixers for concealed installation for iBox universal

Features of all variants

- 2 functions
- ceramic cartridge
- temperature limitation adjustable
- diverter with automatic resetting
- suitable for continous flow water heaters
- connection type: basic set
- wall-mounted
- min. operating pressure: 1 bar
- max. operating pressure: 10 bar

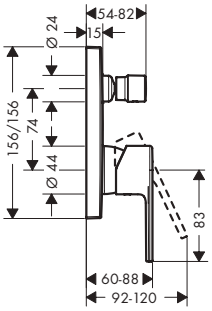

Overview variants

Security combination EN 1717	Max. flow rate at 3 bar (l/min)	Finish	Code no.
–	29	Chrome	71468000
		Matt Black	71468670
■	25	Chrome	71469000
		Matt Black	71469670

Vernis Shape Single lever bath mixer for concealed installation

Features

- 2 functions
- maximum flow rate at 3 bar: 30,7 l/min
- flow rate for bath spout at 3 bar: 30,7 l/min
- flow rate of hand shower at 3 bar: 27,4 l/min
- ceramic cartridge
- temperature limitation adjustable
- diverter with automatic resetting
- suitable for continous flow water heaters
- connection type: basic set
- wall-mounted
- min. operating pressure: 1 bar
- max. operating pressure: 10 bar

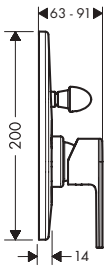

Finish	Code no.
Chrome	71458000
Matt Black	71458670

Required parts:	Code no.
Basic set for single lever bath mixer for concealed installation	31741180

Measurements within scale drawings are in mm.
Technical specifications and units of measure are subject to change.

Vernis Shape Bath mixer set for concealed installation

Features

- consists of: Single lever bath mixer, basic set
- 2 functions
- maximum flow rate at 3 bar: 30 l/min
- ceramic cartridge
- temperature limitation adjustable
- diverter with automatic resetting
- suitable for continous flow water heaters
- connection type: basic set
- wall-mounted
- min. operating pressure: 1 bar
- max. operating pressure: 10 bar

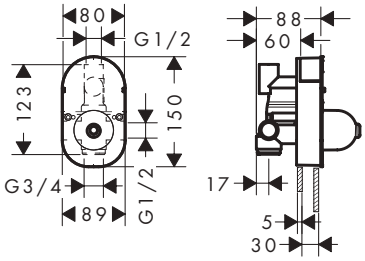

Finish	Code no.
Chrome	71472000

Vernis Shape Bath spout

Features

- 1 function
- with escutcheon
- projection: 204 mm
- wall-mounted
- maximum flow rate at 3 bar: 21,7 l/min
- connection dimension: G ½
- spray type: normal spray

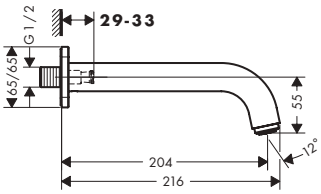

Technologies

AirPower

Finish	Code no.
Chrome	71460000
Matt Black	71460670

Optional parts:		Code no.
	Connecting thread G ¾	92504000

Vernis Shape 4-hole rim mounted bath mixer

Features

- consists of: 4-hole rim mounted bath mixer, hand shower
- 2 functions
- projection: 211 mm
- spray type hand shower: Rain, IntenseRain
- maximum pull-out length of hand shower: 1.60 m
- maximum flow rate at 3 bar: 25 l/min
- flow rate for bath spout at 3 bar: 25 l/min
- flow rate of hand shower at 3 bar: 17 l/min
- ceramic valves hot/cold 90°
- non-return valve
- suitable for continous flow water heaters
- connection dimension: DN15
- connection type: G ½
- installation on bath rim
- min. operating pressure: 1 bar
- max. operating pressure: 10 bar
- maintenance opening required

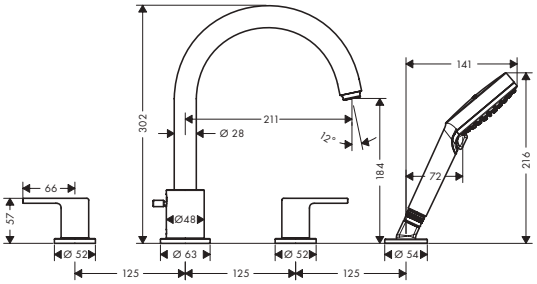

Technologies

AirPower

Spray types

Intense Rain

Rain

Finish	Code no.
Chrome	71459000
Matt Black	71459670

Required parts:	Code no.
Basic set for 4-hole rim mounted bath mixer	13244180

Vernis Shape 2-hole rim mounted bath mixer with diverter valve and Vernis Blend hand shower Vario

Features

- consists of: 2-hole rim mounted bath mixer, hand shower, shower holder, shower hose
- 2 functions
- centre distance: 180 mm
- maximum flow rate at 3 bar: 49,3 l/min
- flow rate for bath spout at 3 bar: 49,3 l/min
- flow rate of hand shower at 3 bar: 18,1 l/min
- ceramic valves hot/cold 90°
- operating pressure from 0.2 bar
- diverter with automatic resetting
- diverter lockable
- non-return valve
- with silencer
- connection dimension: DN20
- connection type: G ¾
- installation on bath rim

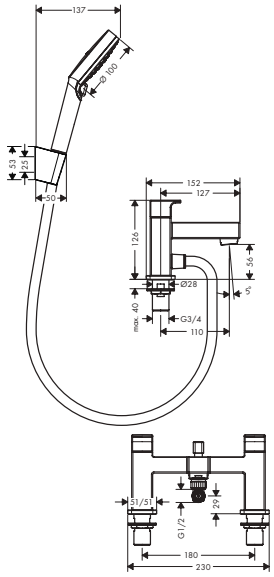

Finish	Code no.
Chrome	71462000

Measurements within scale drawings are in mm.
Technical specifications and units of measure are subject to change.

Vernis Shape 2-hole rim mounted bath mixer

Features

- 1 function
- projection: 110 mm
- centre distance: 180 mm
- ceramic valves hot/cold 90°
- operating pressure from 0.2 bar
- connection dimension: DN20
- connection type: G ¾
- installation on bath rim
- min. operating pressure: 1 bar
- max. operating pressure: 10 bar

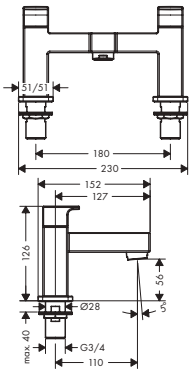

Certificates/declarations

Finish	Code no.
Chrome	71452000
Matt Black	71452670

Vernis Shape Single lever bath and shower mixer Monotrou

Features

- 2 functions
- projection: 95 mm
- spray type mixer: laminar spray
- maximum flow rate at 3 bar: 24 l/min
- flow rate for bath spout at 3 bar: 24 l/min
- flow rate of hand shower at 3 bar: 13,7 l/min
- ceramic cartridge
- temperature limitation adjustable
- diverter with automatic resetting
- protected against backflow, according to DIN EN 1717
- suitable for continous flow water heaters
- connection dimension: DN15
- connection type: G ⅜ hose connections
- installation on bath rim
- min. operating pressure: 1 bar
- max. operating pressure: 10 bar

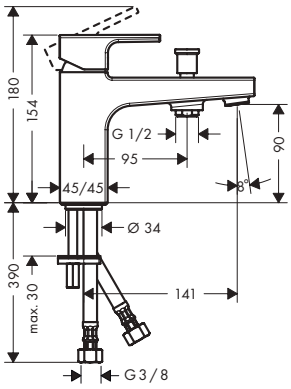

Finish	Code no.
Chrome	71463000

Vernis Shape Single lever bath and shower mixer Monotrou with 2 flow rates

Features

- 2 functions
- projection: 95 mm
- spray type mixer: laminar spray
- maximum flow rate at 3 bar: 24 l/min
- flow rate for bath spout at 3 bar: 24 l/min
- flow rate of hand shower at 3 bar: 13,7 l/min
- ceramic cartridge with Eco handle position for 2 flow rates
- temperature limitation adjustable
- diverter with automatic resetting
- protected against backflow, according to DIN EN 1717
- suitable for continous flow water heaters
- connection dimension: DN15
- connection type: G ⅜ hose connections
- installation on bath rim
- min. operating pressure: 1 bar
- max. operating pressure: 10 bar
- no additional maintenance opening required

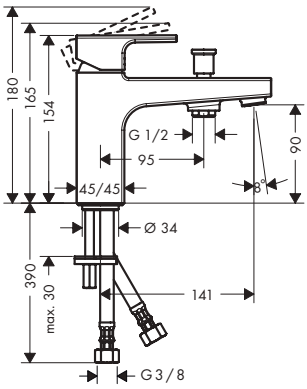

Sustainability

Eco Selection

Finish	Code no.
Chrome	71464000

Vernis Shape Single lever shower mixer for exposed installation

Features

- 1 function
- maximum flow rate at 3 bar: 15,7 l/min
- flow rate of hand shower at 3 bar: 15,7 l/min
- ceramic cartridge
- temperature limitation adjustable
- non-return valve
- with silencer
- suitable for continous flow water heaters
- hose connection DN15
- connection dimension: DN15
- min. operating pressure: 1 bar
- max. operating pressure: 10 bar
- connection type: S-connections

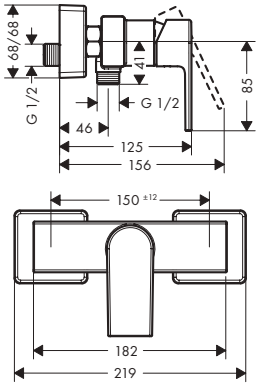

Finish	Code no.
Chrome	71650000
Matt Black	71650670

Measurements within scale drawings are in mm.
Technical specifications and units of measure are subject to change.

Vernis Shape Single lever shower mixer for exposed installation with 2 flow rates

Features

- 1 function
- maximum flow rate at 3 bar: 31 l/min
- flow rate of hand shower at 3 bar: 15,2 l/min
- ceramic cartridge with Eco handle position for a reduced flowrate by up to 50%
- temperature limitation adjustable
- non-return valve
- with silencer
- suitable for continous flow water heaters
- hose connection DN15
- connection dimension: DN15
- min. operating pressure: 1 bar
- max. operating pressure: 10 bar
- connection type: S-connections

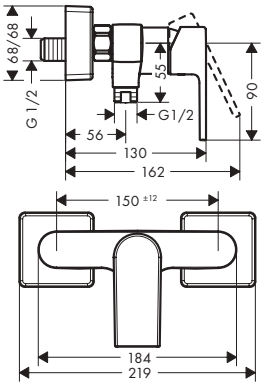

Sustainability

Finish	Code no.
Chrome	71656000

Vernis Shape Single lever shower mixer for concealed installation for iBox universal

Features

- 1 function
- maximum flow rate at 3 bar: 29,3 l/min
- ceramic cartridge
- temperature limitation adjustable
- min. operating pressure: 1 bar
- max. operating pressure: 10 bar
- connection type: basic set

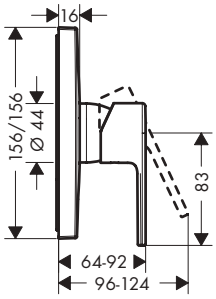

Finish	Code no.
Chrome	71668000
Matt Black	71668670

Measurements within scale drawings are in mm.
Technical specifications and units of measure are subject to change.

Vernis Shape Single lever shower mixer for concealed installation

Features

- 1 function
- maximum flow rate at 3 bar: 28,7 l/min
- ceramic cartridge
- temperature limitation adjustable
- min. operating pressure: 1 bar
- max. operating pressure: 10 bar
- connection type: basic set

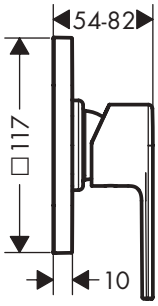

Finish	Code no.
Chrome	71658000
Matt Black	71658670

Required parts:	Code no.
Basic set for single lever shower mixer for concealed installation	13620180

Measurements within scale drawings are in mm.
Technical specifications and units of measure are subject to change.

Electronic mixers

Metris S Electronic basin mixers

Features of all variants

- ComfortZone 150
- projection: 128 mm
- spray type: normal spray
- maximum flow rate at 3 bar: 5 l/min
- temperature limitation adjustable
- non-return valve
- suitable for continous flow water heaters
- infrared sensor technology
- automatic environmental adjustment of infrared sensor
- adjustable optical range of infrared sensor (2 settings)
- running time: 10 s
- hygiene rinse activatable (automatic water flow)
- frequency of hygiene rinse: 24 h
- flushing time hygiene rinse: 10 s
- permanent rinse activatable (single water flow for 180 seconds, suitable for thermal disinfection)
- cleaning mode: manual water stop for washbasin cleaning
- connection dimension: DN15
- TÜV certified
- dirt filters in the connection hoses

pre adjustable

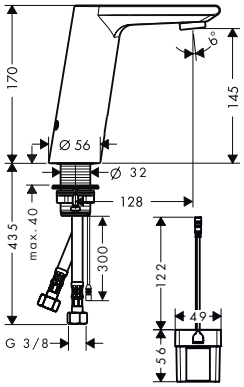

adjustable

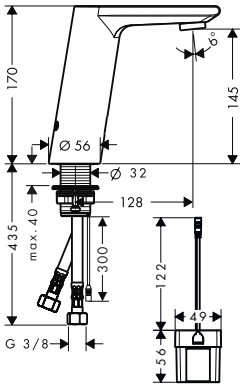

Sustainability

Technologies

Certificates/declarations

Overview variants

Power supply	Temperature adjustment	Finish	Code no.
battery operation	pre adjustable	Chrome	31101000
battery operation	adjustable	Chrome	31100000
mains connection	pre adjustable	Chrome	31103000
mains connection	adjustable	Chrome	31102000

Focus Electronic basin mixers

Features of all variants

- ComfortZone 130
- projection: 127 mm
- spray type: normal spray
- maximum flow rate at 3 bar: 5 l/min
- temperature limitation adjustable
- non-return valve
- suitable for continous flow water heaters
- infrared sensor technology
- automatic environmental adjustment of infrared sensor
- adjustable optical range of infrared sensor (2 settings)
- running time: 10 s
- hygiene rinse activatable (automatic water flow)
- frequency of hygiene rinse: 24 h
- flushing time hygiene rinse: 10 s
- permanent rinse activatable (single water flow for 180 seconds, suitable for thermal disinfection)
- cleaning mode: manual water stop for washbasin cleaning
- connection dimension: DN15
- TÜV certified
- dirt filters in the connection hoses

pre adjustable

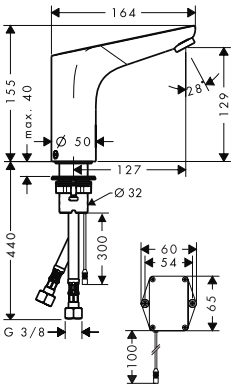

adjustable

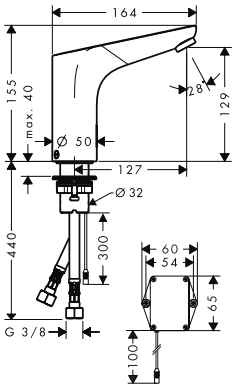

Sustainability

Technologies

Certificates/declarations

Measurements within scale drawings are in mm.
Technical specifications and units of measure are subject to change.

Focus Electronic basin mixers

Overview variants

Power supply	Temperature adjustment	Finish	Code no.
battery operation	pre adjustable	Chrome	31172000
battery operation	adjustable	Chrome	31171000
mains connection	pre adjustable	Chrome	31174000
mains connection	adjustable	Chrome	31173000

Vernis Blend Electronic basin mixers

Features of all variants

- ComfortZone 100
- projection: 112 mm
- spray type: normal spray
- swiveling spray former
- maximum flow rate at 3 bar: 5 l/min
- temperature pre-adjustable
- with isolated water conduction - without contact with nickel and lead
- non-return valve
- infrared sensor technology
- automatic environmental adjustment of infrared sensor
- running time adjustable
- running time: 10 s, 20 s, 30 s
- hygiene rinse activatable (automatic water flow)
- frequency of hygiene rinse: 24 h, 48 h, 72 h
- flushing time hygiene rinse: 10 s, 20 s, 30 s
- permanent rinse activatable (single water flow for 200 seconds, suitable for thermal disinfection)
- cleaning mode: manual water stop for washbasin cleaning
- connection dimension: DN15
- dirt filters in the connection hoses
- frequency of hygiene rinse and flushing time hygiene rinse are dependent on each other (24 h - 10 s, 48 h - 20 s, 72 h - 30 s)

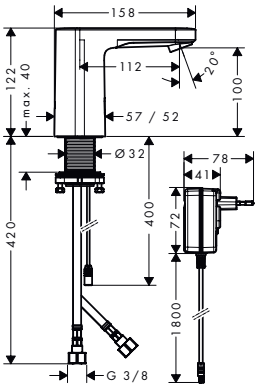

Sustainability

EcoSmart

Technologies

AirPower | Comfort Zone | Sensor Activation

Overview variants

Power supply	Temperature adjustment	Finish	Code no.
battery operation	pre adjustable	Chrome	71502000
mains connection	pre adjustable	Chrome	71501000

Measurements within scale drawings are in mm.
Technical specifications and units of measure are subject to change.

Vernis Blend Electronic basin mixers for cold water or pre-adjusted water

Features of all variants

- ComfortZone 100
- projection: 112 mm
- spray type: normal spray
- swiveling spray former
- maximum flow rate at 3 bar: 5 l/min
- for cold water or pre-adjusted/conditioned water
- with isolated water conduction - without contact with nickel and lead
- suitable for continous flow water heaters
- infrared sensor technology
- automatic environmental adjustment of infrared sensor
- running time adjustable
- running time: 10 s, 20 s, 30 s
- hygiene rinse activatable (automatic water flow)
- frequency of hygiene rinse: 24 h, 48 h, 72 h
- flushing time hygiene rinse: 10 s, 20 s, 30 s
- permanent rinse activatable (single water flow for 200 seconds, suitable for thermal disinfection)
- cleaning mode: manual water stop for washbasin cleaning
- connection dimension: DN15
- dirt filter in the connection hose
- frequency of hygiene rinse and flushing time hygiene rinse are dependent on each other (24 h - 10 s, 48 h - 20 s, 72 h - 30 s)

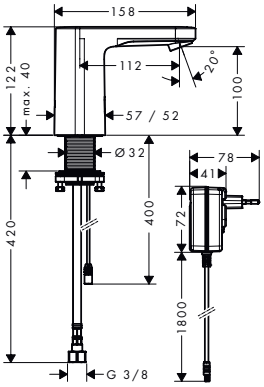

Sustainability

EcoSmart

Technologies

AirPower | Comfort Zone | Sensor Activation

Overview variants

Power supply	Temperature adjustment	Finish	Code no.
battery operation	for cold water or pre-adjusted/conditioned water	Chrome	71503000
mains connection	for cold water or pre-adjusted/conditioned water	Chrome	71504000

Measurements within scale drawings are in mm.
Technical specifications and units of measure are subject to change.

Accessories

Accessories

XtraStoris 630

AddStoris 639

Rainfinity 647

Logis 648

Planet Edition 654

WallStoris 657

Accessories

Wall niches

	XtraStoris Original	XtraStoris Minimalistic	XtraStoris Rock	XtraStoris Individual
Finish				
Height (mm)	300	300	300	300
Width (mm)	150 - 900	150/300	150/300	150/300
Depth (mm)	70/100	100/140	100/140	100
Installation depth (mm)	100	100/140	100/140	100
Tileable Push-Open door	–	–	■	–
Variable installation depth	–	■	■	–
from page	630	633	633	637

■ available depending on the model
– not available

	XtraStoris Original		XtraStoris Rock	
Finish	● ○ ◍	● ○ ◍	● ○ ◍	● ○ ◍
Height (mm)	700	150	600	300
Width (mm)	200	150	145	150/300
Depth (mm)	140	140	140	100/140
Installation depth (mm)	140	140	140	100/140
Tileable Push-Open door	–	–	■	■
Variable installation depth	–	–	–	–
from page	631	632	635	636

Sustainability

EcoSmart

This shower head uses up to 40% less water than our conventional showers. In this way, it reduces water and energy costs every day and conserves valuable resources. For long-lasting soothing showering pleasure.

Technologies

PushSlider

Smooth and ergonomic: This shower support can be used to conveniently adjust the height of the hand shower on the shower rail. Simply press the button and smoothly slide the support. It's so easy, it can be done with one hand.

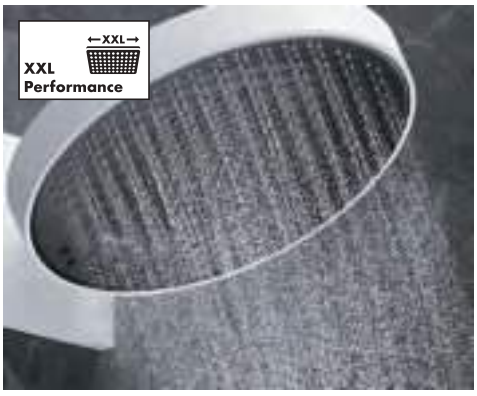

XXL Performance

XXL showering indulgence that envelops the complete body in real-life dreams of water using wonderfully soothing spray types from hand showers and overhead showers with diameters of 100 to 600 mm.

Installation

EasyClick

Hooks, shelves and baskets can be easily attached to and removed from the wall rod. The modular accessories instantly create a sense of tidiness and can be reshuffled for a different look at any time.

Variable installation depth

Discover the versatility of our wall niches with adjustable installation depth. These flexible niches offer storage space and can seamlessly blend into walls of varying thickness, allowing for a customized and stylish appearance.

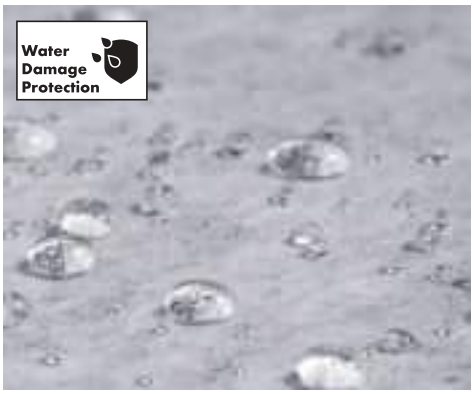

Water damage protection

Avoid water damage with a pre-assembled sealing membrane. It is 100% waterproof. This prevents any shower water from getting through the wall or floor for a reliable and safe showering experience.

Glue or Screw fix

A secure hold thanks to two alternative attachment types: The products can be glued to the wall to keep homeowners and tenants happy. They can also be screwed on, if preferred. Both attachment types hold the accessories securely in place.

Spray types

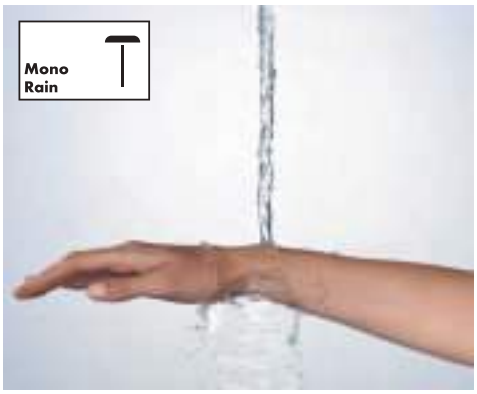

MonoRain

Focused and extremly gentle spray for feel-good wellness. The focused spray type is perfect for hydrotherapeutic showering and cold water treatments. For anyone who loves winding down in their shower or bath tub.

PowderRain

Relaxing, micro-fine droplets that gently and quietly envelop the body. The water is transformed into a delicate cocoon that sensually embraces the body. For sensual showering and indulgent, deep relaxation.

IntenseRain

Stimulating water sprays that wash away tiredness and immediately make the person feel nice and awake. The perfect and quick way to feel fit for the day ahead. The powerful spray also effortlessly rinses shampoo out of hair.

Body color

Brushed Stainless Steel	Matt Black	Matt White
-XXX	-XXX	-XXX

The surfaces marked with XXX are described in the article text and are not recognizable in the article number. The accent surface can be found in the article number at position 6, 7.

Finish

Brushed Black Chrome	Brushed Bronze	Brushed Stainless Steel	Chrome	Concretegrey	Matt Black
-340	-140	-800	-000	-380	-670

Matt White	Polished Gold Optic	Sand (recycled)	Stainless Steel Optic	White
-700	-990	-210	-800	-000

XtraStoris Original Wall niches with frame

Features of all variants

- consists of: wall niche with frame, sealing set
- installation depth: 100 mm
- where to use: new construction, renovation
- easy to clean surface
- suitable for use in wet areas
- wall type: drywall construction, solid wall construction
- material sealing set: Polystyrene (PS)
- material wall niche: Stainless Steel 304 (1.4301)
- surface of the wall niche powder-coated stainless steel

300/150/100

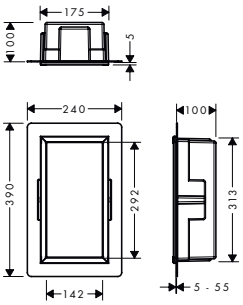

300/300/100

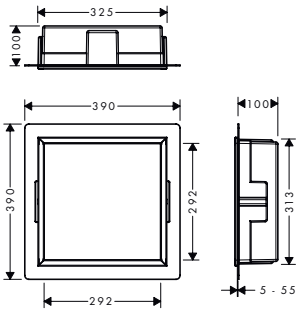

Installation

Water Damage Protection

Overview variants

Width (mm)	required dimensions for installation set	Finish	Code no.
150	313 x 175 x 100 mm (HxWxD)	Concretegrey	56057380
		Matt Black	56057670
		Matt White	56057700
300	313 x 325 x 100 mm (HxWxD)	Concretegrey	56061380
		Matt Black	56061670
		Matt White	56061700

XtraStoris Original Wall niches with frame

Features of all variants

- consists of: wall niche with frame, sealing set
- installation depth: 100 mm
- easy to clean surface
- suitable for use in wet areas
- wall type: solid wall construction, drywall construction
- material sealing set: Polystyrene (PS)
- material wall niche: Stainless Steel 304 (1.4301)
- surface of the wall niche powder-coated stainless steel

300/600/100

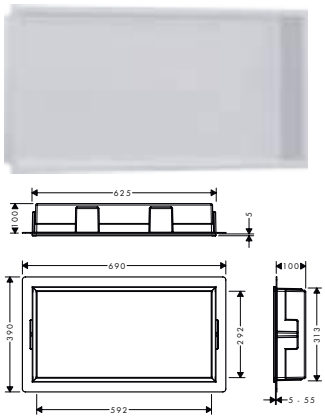

300/900/100

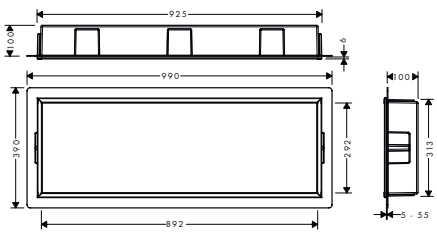

Installation

Water Damage Protection

Overview variants

Width (mm)	required dimensions for installation set	Finish	Code no.
600	313 x 625 x 100 mm (HxWxD)	Concretegrey	56064380
		Matt Black	56064670
		Matt White	56064700
900	313 x 925 x 100 mm (HxWxD)	Concretegrey	56067380
		Matt Black	56067670
		Matt White	56067700

Measurements within scale drawings are in mm.
Technical specifications and units of measure are subject to change.

XtraStoris Original Wall niches with frame

Features of all variants

- consists of: wall niche with frame, sealing set, installation set
- where to use: new construction, renovation
- easy to clean surface
- suitable for use in wet areas
- wall type: solid wall construction, drywall construction
- material sealing set: Polystyrene (PS)
- material wall niche: Stainless Steel 304 (1.4301)
- required dimensions for installation set: 323 x 313 x 75 mm (HxWxD)

300/150/70

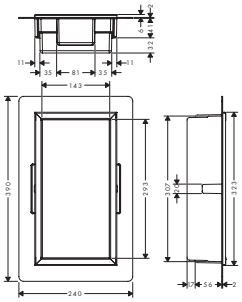

300/300/70

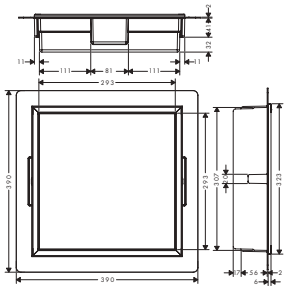

Installation

Water Damage Protection

Overview variants

Width (mm)	required dimensions for installation set	Finish	Code no.
150	323 x 313 x 75 mm (HxWxD)	Concretegrey	56092380
		Matt Black	56092670
		Matt White	56092700
300	323 x 313 x 75 mm (HxWxD)	Concretegrey	56093380
		Matt Black	56093670
		Matt White	56093700

XtraStoris Original Recessed toilet paper storage for 6 rolls

Features

- consists of: wall niche with frame, toilet paper holder
- installation depth: 140 mm
- where to use: new construction, renovation
- easy to clean surface
- mounting brackets for easy installation
- easy adjustment to tile thickness
- wall type: drywall construction, solid wall construction
- material wall niche: Stainless Steel 304 (1.4301)
- stores up to 6 toilet rolls

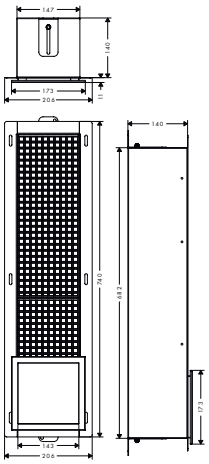

Finish	Code no.
Brushed Stainless Steel	56058800
Matt Black	56058670
Matt White	56058700

Measurements within scale drawings are in mm.
Technical specifications and units of measure are subject to change.

XtraStoris Original Recessed toilet paper holder 150/150 /140

Features

- installation depth: 140 mm
- where to use: new construction, renovation
- easy to clean surface
- frameless design
- wall type: drywall construction, solid wall construction
- material wall niche: Stainless Steel 304 (1.4301)
- dimensions wall niche: 150 x 150 x 140 (HxWxD)
- required dimensions for installation set: 150 x 198 x 144mm (HxWxD)

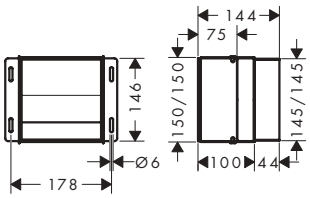

Finish	Code no.
Brushed Stainless Steel	56065800
Matt Black	56065670
Matt White	56065700

XtraStoris Minimalistic Wall niches frameless

Features of all variants

- consists of: wall niche frameless, installation set, sealing set
- installation depth: 100 mm
- where to use: new construction, renovation
- variable installation depth
- easy to clean surface
- installable flush with the wall or as a design element sticking out (up to 55 mm)
- frameless design
- suitable for use in wet areas
- easy adjustment to tile thickness
- wall type: drywall construction, solid wall construction
- material sealing set: Polystyrene (PS)
- material wall niche: Stainless Steel 304 (1.4301)

300/150/100

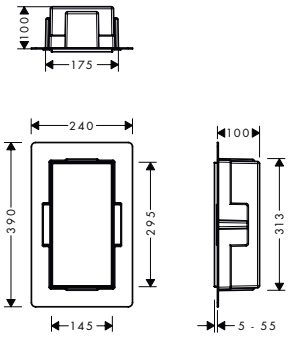

300/300/100

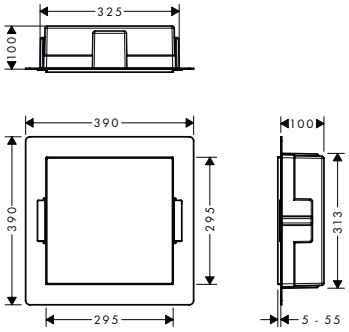

Installation

Overview variants

Width (mm)	required dimensions for installation set	Finish	Code no.
150	313 x 175 x 100 mm (HxWxD)	Brushed Stainless Steel	56070800
		Matt Black	56070670
		Matt White	56070700
300	313 x 325 x 100 mm (HxWxD)	Brushed Stainless Steel	56073800
		Matt Black	56073670
		Matt White	56073700

Measurements within scale drawings are in mm.
Technical specifications and units of measure are subject to change.

XtraStoris Minimalistic Wall niches frameless

Features of all variants

- consists of: wall niche frameless, installation set, sealing set
- installation depth: 140 mm
- where to use: new construction, renovation
- variable installation depth
- easy to clean surface
- installable flush with the wall or as a design element sticking out (up to 55 mm)
- frameless design
- suitable for use in wet areas
- easy adjustment to tile thickness
- wall type: solid wall construction, drywall construction
- material sealing set: Polystyrene (PS)
- material wall niche: Stainless Steel 304 (1.4301)

300/150/140

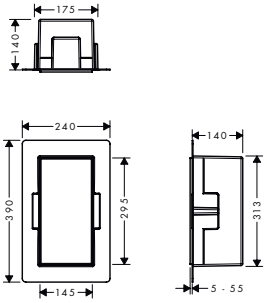

300/300/140

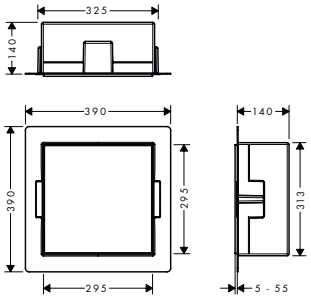

Installation

Overview variants

Width (mm)	required dimensions for installation set	Finish	Code no.
150	313 x 175 x 140 mm (HxWxD)	Brushed Stainless Steel	56076800
		Matt Black	56076670
		Matt White	56076700
300	313 x 325 x 140 mm (HxWxD)	Brushed Stainless Steel	56079800
		Matt Black	56079670
		Matt White	56079700

XtraStoris Rock Wall niches with tileable door

Features of all variants

- consists of: wall niche with tileable door, installation set, sealing set
- tileable Push-Open door
- door hinge: left
- depth of the tileable door: 12 mm
- installation depth: 100 mm
- variable installation depth
- easy to clean surface
- suitable for use in wet areas
- easy adjustment to tile thickness
- wall type: solid wall construction, drywall construction
- material sealing set: Polystyrene (PS)
- material wall niche: Stainless Steel 304 (1.4301)

300/150/100

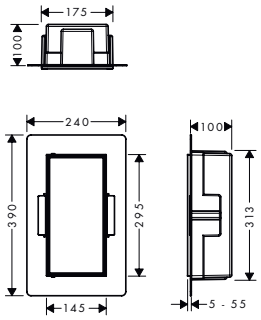

300/300/100

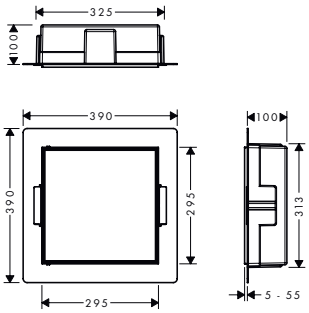

Installation

Overview variants

Width (mm)	required dimensions for installation set	Finish	Code no.
150	313 x 175 x 100 mm (HxWxD)	Brushed Stainless Steel	56082800
		Matt Black	56082670
		Matt White	56082700
300	313 x 325 x 100 mm (HxWxD)	Brushed Stainless Steel	56085800
		Matt Black	56085670
		Matt White	56085700

Measurements within scale drawings are in mm.
Technical specifications and units of measure are subject to change.

XtraStoris Rock Wall niches with tileable door

Features of all variants

- consists of: wall niche with tileable door, installation set, sealing set
- tileable Push-Open door
- door hinge: left
- depth of the tileable door: 12 mm
- installation depth: 140 mm
- where to use: new construction, renovation
- variable installation depth
- easy to clean surface
- suitable for use in wet areas
- easy adjustment to tile thickness
- wall type: solid wall construction, drywall construction
- material sealing set: Polystyrene (PS)
- material wall niche: Stainless Steel 304 (1.4301)

300/150/140

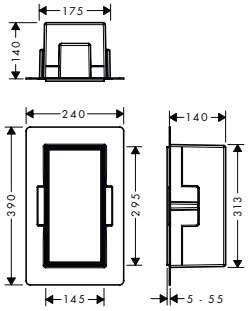

300/300/140

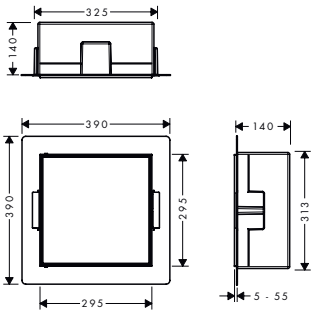

Installation

Overview variants

Width (mm)	required dimensions for installation set	Finish	Code no.
150	313 x 175 x 140 mm (HxWxD)	Brushed Stainless Steel	56088800
		Matt Black	56088670
		Matt White	56088700
300	313 x 325 x 140 mm (HxWxD)	Brushed Stainless Steel	56091800
		Matt Black	56091670
		Matt White	56091700

Measurements within scale drawings are in mm.
Technical specifications and units of measure are subject to change.

XtraStoris Rock Recessed toilet brush holder with storage shelf and tileable door

Features

- consists of: wall niche with tileable door, toilet brush holder, toilet brush, shelf, installation set, sealing set
- tileable Push-Open door
- door hinge: change can be customised before installation
- depth of the tileable door: 12 mm
- installation depth: 140 mm
- where to use: new construction, renovation
- easy to clean surface
- frameless design
- easy adjustment to tile thickness
- wall type: drywall construction, solid wall construction
- material sealing set: Polystyrene (PS)
- material wall niche: Stainless Steel 304 (1.4301)
- material of the brush holder plastic, chromed
- dimensions wall niche: 595 x 145 x 140 (HxWxD)
- required dimensions for installation set: 606 x 176 x 140 mm (HxWxD)

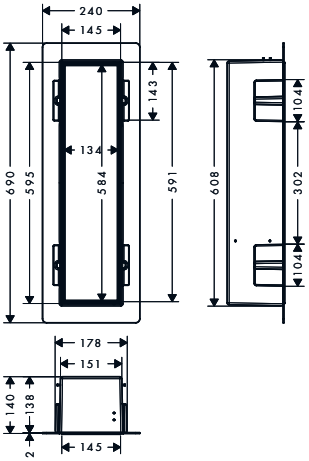

Installation

Water Damage Protection

Finish	Code no.
Brushed Stainless Steel	56060800
Matt Black	56060670
Matt White	56060700

XtraStoris Rock Recessed toilet brush holder with toilet paper holder and tileable door

Features

- consists of: wall niche with tileable door, toilet brush holder, toilet brush, toilet paper roll holder, installation set, sealing set
- tileable Push-Open door
- door hinge: left
- depth of the tileable door: 12 mm
- installation depth: 140 mm
- where to use: new construction, renovation
- easy to clean surface
- easy adjustment to tile thickness
- frameless design
- wall type: drywall construction, solid wall construction
- material sealing set: Polystyrene (PS)
- material wall niche: Stainless Steel 304 (1.4301)
- door stop can be changed before installation
- material of the brush holder plastic, chromed
- dimensions wall niche: 595 x 145 x 140 (HxWxD)
- required dimensions for installation set: 606 x 176 x 140 mm (HxWxD)

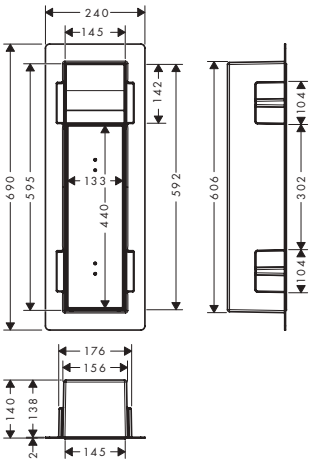

Installation

Water Damage Protection

Finish	Code no.
Brushed Stainless Steel	56062800
Matt Black	56062670
Matt White	56062700

Measurements within scale drawings are in mm.
Technical specifications and units of measure are subject to change.

XtraStoris Rock Recessed waste bin with tileable door

Features of all variants

- tileable Push-Open door
- depth of the tileable door: 12 mm
- where to use: new construction, renovation
- easy to clean surface
- wall type: drywall construction, solid wall construction
- material sealing set: Polystyrene (PS)
- material wall niche: Stainless Steel 304 (1.4301)

300/150/140

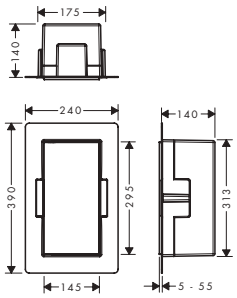

300/300/100

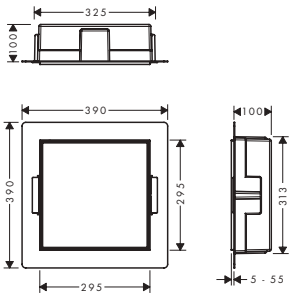

300/300/140

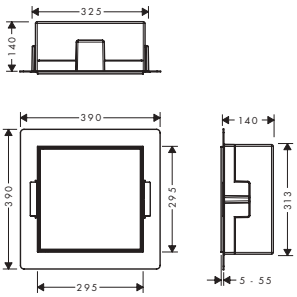

Installation

Water Damage Protection

Overview variants

Width (mm)	Finish	Code no.
150	Matt Black	56063670
	Matt White	56063700
	Brushed Stainless Steel	56063800
300	Brushed Stainless Steel	56089800
	Matt Black	56089670
	Matt White	56089700
300	Brushed Stainless Steel	56090800
	Matt Black	56090670
	Matt White	56090700

Measurements within scale drawings are in mm.
Technical specifications and units of measure are subject to change.

XtraStoris Individual Wall niches with design frame

Features of all variants

- consists of: wall niche with design frame, installation set, sealing set
- installation depth: 100 mm
- where to use: new construction, renovation
- easy to clean surface
- suitable for use in wet areas
- wall type: solid wall construction, drywall construction
- material sealing set: Polystyrene (PS)
- material wall niche: Stainless Steel 304 (1.4301)

300/150/100

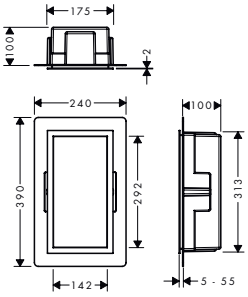

300/300/100

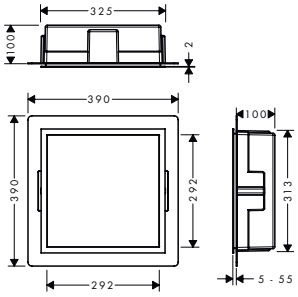

Installation

Water Damage Protection

Overview variants

Dimensions	Body color	Finish	Code no.
300 x 150 x 100 mm (HxWxD)	Brushed Stainless Steel	Brushed Bronze	56094140
		Brushed Black Chrome	56094340
		Matt Black	56094670
		Matt White	56094700
		Brushed Stainless Steel	56094800
		Polished Gold Optic	56094990
300 x 150 x 100 mm (HxWxD)	Matt White	Brushed Bronze	56096140
		Brushed Black Chrome	56096340
		Matt Black	56096670
		Matt White	56096700
		Brushed Stainless Steel	56096800
		Polished Gold Optic	56096990
300 x 150 x 100 mm (HxWxD)	Matt Black	Brushed Bronze	56095140
		Brushed Black Chrome	56095340
		Matt Black	56095670
		Matt White	56095700
		Brushed Stainless Steel	56095800
		Polished Gold Optic	56095990
300 x 300 x 100 mm (HxWxD)	Brushed Stainless Steel	Brushed Bronze	56097140
		Brushed Black Chrome	56097340
		Matt Black	56097670
		Matt White	56097700
		Brushed Stainless Steel	56097800
		Polished Gold Optic	56097990

For more information about this product, please see the next page.

Measurements within scale drawings are in mm.
Technical specifications and units of measure are subject to change.

XtraStoris Individual Wall niches with design frame

Overview variants

Dimensions	Body color	Finish	Code no.
300 x 300 x 100 mm (HxWxD)	Matt White	Brushed Bronze	56099140
		Brushed Black Chrome	56099340
		Matt Black	56099670
		Matt White	56099700
		Brushed Stainless Steel	56099800
		Polished Gold Optic	56099990
300 x 300 x 100 mm (HxWxD)	Matt Black	Brushed Bronze	56098140
		Brushed Black Chrome	56098340
		Matt Black	56098670
		Matt White	56098700
		Brushed Stainless Steel	56098800
		Polished Gold Optic	56098990

XtraStoris Safe Wall niche with tileable door and integrated shut-off valve 150/300/100

Features

- consists of: wall niche with tileable door, shut-off valve, installation set
- tileable Push-Open door
- depth of the tileable door: 12 mm
- installation depth: 90 mm
- where to use: new construction, renovation
- easy to clean surface
- wall type: drywall construction
- material wall niche: Stainless Steel 304 (1.4301)
- surface of the wall niche powder-coated stainless steel
- dimensions wall niche: 150 x 300 x 100 mm (HxWxD)

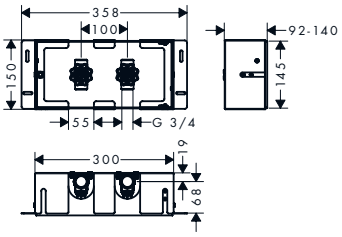

Installation

Water Damage Protection

Finish	Code no.
Stainless Steel Optic	56100800

Measurements within scale drawings are in mm.
Technical specifications and units of measure are subject to change.

AddStoris Toothbrush tumbler

Features

- wall-mounted
- material: metal, matt glass
- holder material: metal
- with mounting material
- concealed fastening
- drilling distance: 26 mm
- diameter drill hole: 6 mm

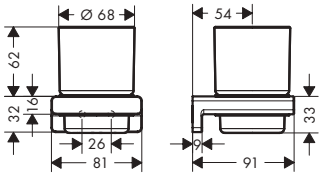

Finish	Code no.
Chrome	41749000
Brushed Bronze	41749140
Brushed Black Chrome	41749340
Matt Black	41749670
Matt White	41749700
Polished Gold Optic	41749990

AddStoris Liquid soap dispenser

Features

- wall-mounted
- holder material: metal
- material container: matt glass
- type of soap: liquid soap
- filling capacity 200 ml
- dosage 2 ml
- with mounting material
- concealed fastening
- drilling distance: 26 mm
- diameter drill hole: 6 mm

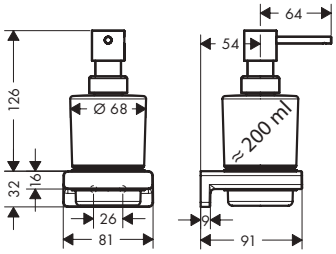

Finish	Code no.
Chrome	41745000
Brushed Bronze	41745140
Brushed Black Chrome	41745340
Matt Black	41745670
Matt White	41745700
Polished Gold Optic	41745990

AddStoris Soap dish

Features

- wall-mounted
- material recess: matt glass
- holder material: metal
- with mounting material
- concealed fastening
- drilling distance: 26 mm
- diameter drill hole: 6 mm

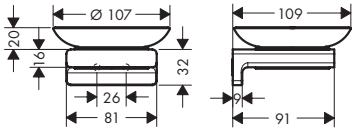

Finish	Code no.
Chrome	41746000
Brushed Bronze	41746140
Brushed Black Chrome	41746340
Matt Black	41746670
Matt White	41746700
Polished Gold Optic	41746990

Measurements within scale drawings are in mm.
Technical specifications and units of measure are subject to change.

AddStoris Corner basket

Features

- wall-mounted
- holder material: metal
- with mounting material
- concealed fastening
- drilling distance: 40 mm
- diameter drill hole: 6 mm
- can be used additional as a shelf

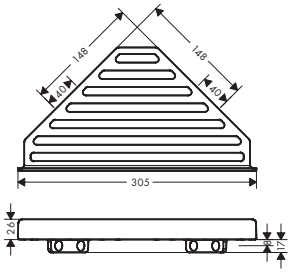

Finish	Code no.
Chrome	41741000
Brushed Bronze	41741140
Brushed Black Chrome	41741340
Matt Black	41741670
Matt White	41741700
Polished Gold Optic	41741990

AddStoris Tissue box

Features

- wall-mounted
- adhesive attachement, screw fastening
- material: plastic
- suitable for customary tissue boxes
- easy removal of the lid for easy filling
- with mounting material
- concealed fastening
- drilling distance: 200 mm
- diameter drill hole: 6 mm
- horizontal or vertical installation

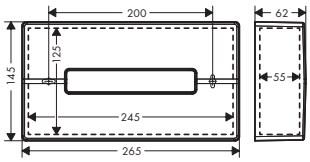

Finish	Code no.
Chrome	41774000
Brushed Bronze	41774140
Brushed Black Chrome	41774340
Matt Black	41774670
Matt White	41774700
Polished Gold Optic	41774990

AddStoris Grab bar

Features

- wall-mounted
- material: metal
- length: 348 mm
- with mounting material
- concealed fastening
- drilling distance: 326 mm
- diameter drill hole: 6 mm
- TÜV certified

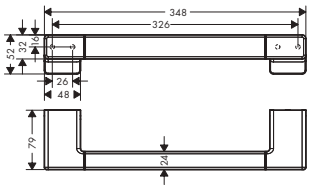

Finish	Code no.
Chrome	41744000
Brushed Bronze	41744140
Brushed Black Chrome	41744340
Matt Black	41744670
Matt White	41744700
Polished Gold Optic	41744990

Measurements within scale drawings are in mm.
Technical specifications and units of measure are subject to change.

AddStoris Towel holder twin-handle

Features

- wall-mounted
- material: metal
- holder material: plastic
- fixed
- length: 445 mm
- with mounting material
- drilling distance: 26 mm
- diameter drill hole: 6 mm
- concealed fastening

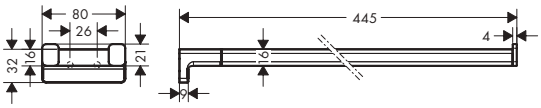

Finish	Code no.
Chrome	41770000
Brushed Bronze	41770140
Brushed Black Chrome	41770340
Matt Black	41770670
Matt White	41770700
Polished Gold Optic	41770990

AddStoris Towel ring

Features

- wall-mounted
- material: metal
- swivelling
- with mounting material
- concealed fastening
- drilling distance: 26 mm
- diameter drill hole: 6 mm

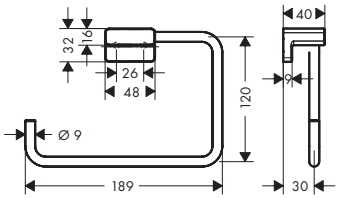

Finish	Code no.
Chrome	41754000
Brushed Bronze	41754140
Brushed Black Chrome	41754340
Matt Black	41754670
Matt White	41754700
Polished Gold Optic	41754990

AddStoris Towel hooks

Features of all variants

- wall-mounted
- material: metal
- with mounting material
- concealed fastening
- diameter drill hole: 6 mm

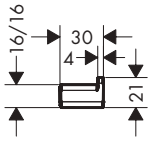

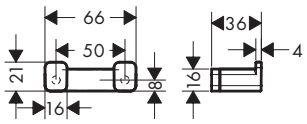

Overview variants

	Number of hooks	Finish	Code no.
	1 hook	Chrome	41742000
		Brushed Bronze	41742140
		Brushed Black Chrome	41742340
		Matt Black	41742670
		Matt White	41742700
		Polished Gold Optic	41742990

For more information about this product, please see the next page.

Measurements within scale drawings are in mm.
Technical specifications and units of measure are subject to change.

AddStoris Towel hooks

Overview variants

Number of hooks	Finish	Code no.
2 hooks	Chrome	41755000
	Brushed Bronze	41755140
	Brushed Black Chrome	41755340
	Matt Black	41755670
	Matt White	41755700
	Polished Gold Optic	41755990

AddStoris Bath towel rails

Features of all variants

- wall-mounted
- material: metal
- holder material: metal
- length: 648 mm
- with mounting material
- drilling distance: 626 mm
- diameter drill hole: 6 mm
- concealed fastening

single

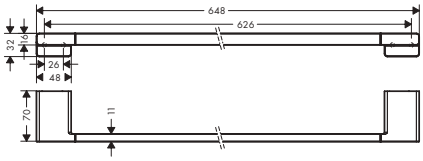

double

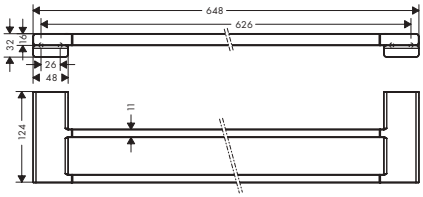

Overview variants

Number of holder	Finish	Code no.
1 holder	Chrome	41747000
	Brushed Bronze	41747140
	Brushed Black Chrome	41747340
	Matt Black	41747670
	Matt White	41747700
	Polished Gold Optic	41747990
2 holders	Chrome	41743000
	Brushed Bronze	41743140
	Brushed Black Chrome	41743340
	Matt Black	41743670
	Matt White	41743700
	Polished Gold Optic	41743990

Measurements within scale drawings are in mm.
Technical specifications and units of measure are subject to change.

AddStoris Towel rack with towel rail

Features

- wall-mounted
- material: metal
- holder material: plastic
- length: 648 mm
- with mounting material
- concealed fastening
- drilling distance: 626 mm
- diameter drill hole: 6 mm

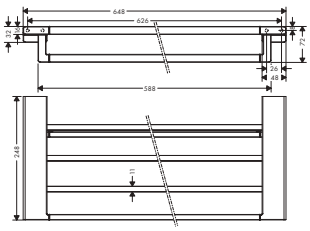

Finish	Code no.
Chrome	41751000
Brushed Bronze	41751140
Brushed Black Chrome	41751340
Matt Black	41751670
Matt White	41751700
Polished Gold Optic	41751990

AddStoris Shower door handle

Features

- material: metal
- holder material: metal
- length: 398 mm
- with mounting material
- thickness of glass: 6 - 12 mm
- drilling distance: 350 mm
- diameter drill hole: 6 mm
- can be used simultaneously as a bath towel holder
- concealed fastening

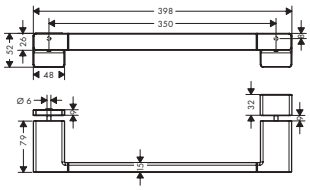

Finish	Code no.
Chrome	41759000
Brushed Bronze	41759140
Brushed Black Chrome	41759340
Matt Black	41759670
Matt White	41759700
Polished Gold Optic	41759990

AddStoris Toilet paper holders

Features of all variants

- wall-mounted
- material: metal
- with mounting material
- concealed fastening
- drilling distance: 26 mm
- diameter drill hole: 6 mm

without cover

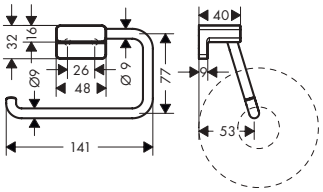

with shelf

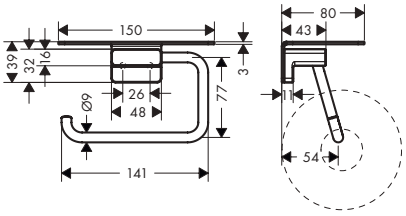

with cover

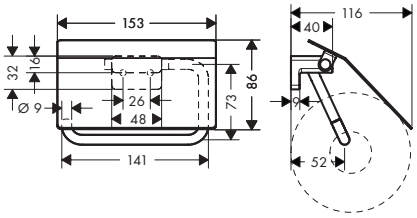

For more information about this product, please see the next page.

AddStoris Toilet paper holders

Overview variants

Version	Finish	Code no.
without cover	Chrome	41771000
	Brushed Bronze	41771140
	Brushed Black Chrome	41771340
	Matt Black	41771670
	Matt White	41771700
	Polished Gold Optic	41771990
with shelf	Chrome	41772000
	Brushed Bronze	41772140
	Brushed Black Chrome	41772340
	Matt Black	41772670
	Matt White	41772700
	Polished Gold Optic	41772990
with cover	Chrome	41753000
	Brushed Bronze	41753140
	Brushed Black Chrome	41753340
	Matt Black	41753670
	Matt White	41753700
	Polished Gold Optic	41753990

AddStoris Toilet paper holder double

Features

- wall-mounted
- material: metal
- with mounting material
- concealed fastening
- drilling distance: 26 mm
- diameter drill hole: 6 mm
- for 2 paper rolls

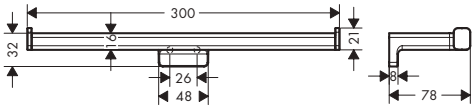

Finish	Code no.
Chrome	41748000
Brushed Bronze	41748140
Brushed Black Chrome	41748340
Matt Black	41748670
Matt White	41748700
Polished Gold Optic	41748990

AddStoris Spare roll holder

Features

- wall-mounted
- material: metal
- with mounting material
- concealed fastening
- drilling distance: 26 mm
- diameter drill hole: 6 mm

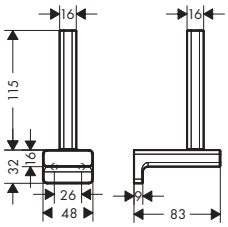

Finish	Code no.
Chrome	41756000
Brushed Bronze	41756140
Brushed Black Chrome	41756340
Matt Black	41756670
Matt White	41756700
Polished Gold Optic	41756990

Measurements within scale drawings are in mm.
Technical specifications and units of measure are subject to change.

AddStoris Toilet brush holder wall-mounted

Features

- wall-mounted
- material: metal, glass
- material recess: matt glass
- with removable insert
- with mounting material
- concealed fastening
- drilling distance: 26 mm
- diameter drill hole: 6 mm

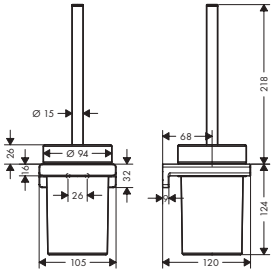

Finish	Code no.
Chrome	41752000
Brushed Bronze	41752140
Brushed Black Chrome	41752340
Matt Black	41752670
Matt White	41752700
Polished Gold Optic	41752990

Optional parts:	Finish	Code no.
Replacement toilet brush with handle	Chrome	93286000

AddStoris Sanitary bag dispenser

Features

- wall-mounted
- adhesive attachement, screw fastening
- material: plastic
- suitable for: customary sanitary bag boxes
- easy removal of the lid for easy filling
- with mounting material
- concealed fastening
- drilling distance: 90 mm
- diameter drill hole: 6 mm
- horizontal or vertical installation

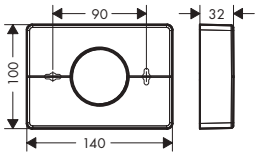

Finish	Code no.
Chrome	41773000
Brushed Bronze	41773140
Brushed Black Chrome	41773340
Matt Black	41773670
Matt White	41773700
Polished Gold Optic	41773990

AddStoris Pedal Bin

Features

- free-standing
- material: metal, plastic
- material recess: plastic
- capacity: 3 l
- with removable insert
- softclose function guarantees a quiet closing of the lid

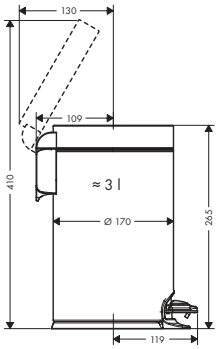

Finish	Code no.
Chrome	41775000
Matt Black	41775670
Matt White	41775700

Measurements within scale drawings are in mm.
Technical specifications and units of measure are subject to change.

AddStoris Shaving mirror

Features

- material: mirror glass
- material frame: metal
- mirror is inclinable
- swivelling
- enlargement: 1 x magnification, 3 x magnification
- with mounting material
- concealed fastening
- drilling distance: 31 mm
- diameter drill hole: 6 mm
- wall-mounted

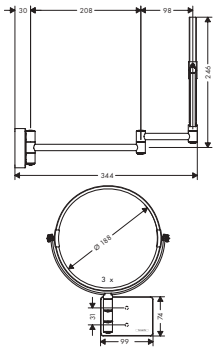

Finish	Code no.
Chrome	41791000
Brushed Bronze	41791140
Brushed Black Chrome	41791340
Matt Black	41791670
Matt White	41791700
Polished Gold Optic	41791990

AddStoris Shaving mirror with LED light

Features

- material: mirror glass
- material frame: metal
- mirror is inclinable
- swivelling
- enlargement: 3 x magnification
- light source: max. 2 W (21 x 0.08 W / LED)
- input voltage: 100 - 240 V AC / 50 / 60 Hz
- output voltage: 21 V DC
- degree of protection: IP20
- with mounting material
- concealed fastening
- drilling distance: 48 mm
- diameter drill hole: 6 mm
- TÜV certified
- wall-mounted
- cavity socket required for installation

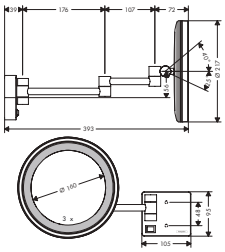

Finish	Code no.
Chrome	41790000
Brushed Bronze	41790140
Brushed Black Chrome	41790340
Matt Black	41790670
Matt White	41790700
Polished Gold Optic	41790990

Measurements within scale drawings are in mm.
Technical specifications and units of measure are subject to change.

Rainfinity Shelf 500

Features

- wall-mounted
- material frame: metal
- material shelf: safety glass
- surface shelf: graphite
- length: 500 mm
- with mounting material
- concealed fastening
- drilling distance: 400 mm
- diameter drill hole: 6 mm

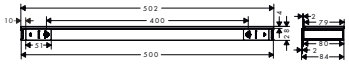

Finish	Code no.
Chrome	26844000
Brushed Bronze	26844140
Brushed Black Chrome	26844340
Matt Black	26844670
Matt White	26844700
Polished Gold Optic	26844990

26844000 Surface shelf: mirror glass.

Logis Universal Toothbrush tumbler

Features

- wall-mounted
- material: matt glass, metal
- holder material: metal
- with mounting material
- concealed fastening
- drilling distance: 26 mm
- diameter drill hole: 6 mm

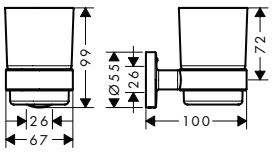

Finish	Code no.
Chrome	41718000

Logis Universal Liquid soap dispenser

Features

- wall-mounted
- holder material: metal
- material container: matt glass
- type of soap: liquid soap
- filling capacity 200 ml
- dosage 2 ml
- with mounting material
- concealed fastening
- drilling distance: 26 mm
- diameter drill hole: 6 mm

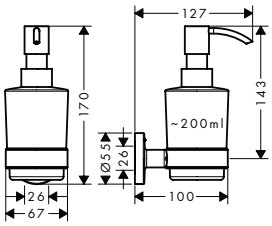

Finish	Code no.
Chrome	41714000

Logis Universal Soap dish

Features

- wall-mounted
- material recess: matt glass
- holder material: metal
- with mounting material
- concealed fastening
- drilling distance: 26 mm
- diameter drill hole: 6 mm

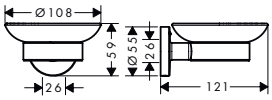

Finish	Code no.
Chrome	41715000

Logis Universal Corner basket

Features

- wall-mounted
- holder material: metal
- with mounting material
- concealed fastening
- diameter drill hole: 6 mm

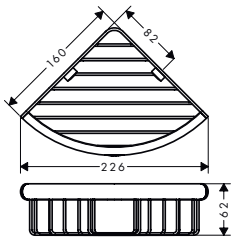

Finish	Code no.
Chrome	41710000

Measurements within scale drawings are in mm.
Technical specifications and units of measure are subject to change.

Logis Universal Grab bar

Features

- wall-mounted
- material: brass
- holder material: metal
- length: 345 mm
- with mounting material
- concealed fastening
- drilling distance: 300 mm
- diameter drill hole: 6 mm
- TÜV certified

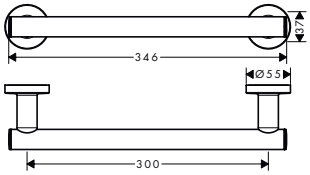

Finish	Code no.
Chrome	41713000

Logis Universal Towel ring

Features

- wall-mounted
- material: brass
- holder material: metal
- fixed
- with mounting material
- concealed fastening
- drilling distance: 26 mm
- diameter drill hole: 6 mm

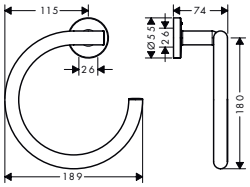

Finish	Code no.
Chrome	41724000

Logis Universal Towel hooks

Features of all variants

- wall-mounted
- material: metal
- with mounting material
- concealed fastening
- diameter drill hole: 6 mm

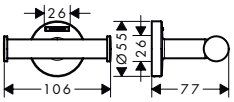

Overview variants

	Number of hooks	Finish	Code no.
	1 hook	Chrome	41711000
	2 hooks	Chrome	41725000

Measurements within scale drawings are in mm.
Technical specifications and units of measure are subject to change.

Logis Universal Bath towel rails

Features of all variants

- wall-mounted
- material: brass
- holder material: metal
- length: 644 mm
- with mounting material
- drilling distance: 600 mm
- diameter drill hole: 6 mm
- concealed fastening

single

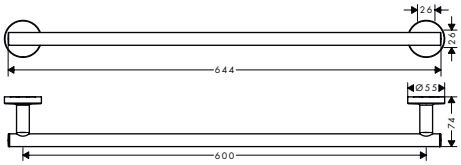

double

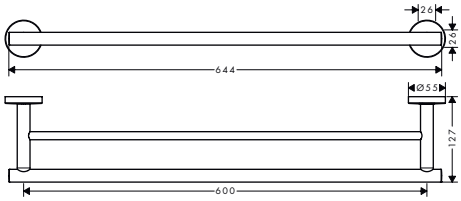

Overview variants

	Number of holder	Finish	Code no.
	1 holder	Chrome	41716000
	2 holders	Chrome	41712000

Logis Universal Towel rack with towel rail

Features

- wall-mounted
- material: brass
- holder material: metal
- length: 600 mm
- with mounting material
- concealed fastening
- drilling distance: 600 mm
- diameter drill hole: 6 mm

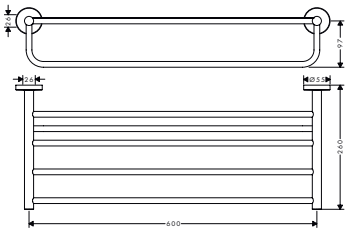

Finish	Code no.
Chrome	41720000

Measurements within scale drawings are in mm.
Technical specifications and units of measure are subject to change.

Logis Universal Toilet paper holders

Features of all variants

- wall-mounted
- material: brass
- with mounting material
- concealed fastening
- drilling distance: 26 mm
- diameter drill hole: 6 mm

without cover

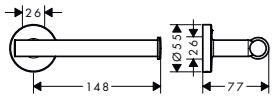

double

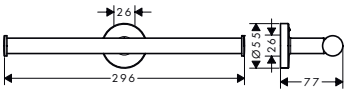

with cover

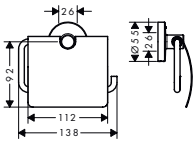

Overview variants

	Version	Finish	Code no.
	without cover	Chrome	41726000
	double	Chrome	41717000
	with cover	Chrome	41723000

Logis Universal Toilet brush holder wall-mounted

Features

- wall-mounted
- material: brass
- material recess: matt glass
- with removable insert
- with mounting material
- concealed fastening
- drilling distance: 26 mm
- diameter drill hole: 6 mm

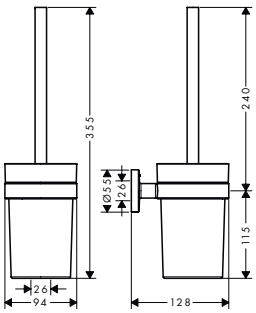

Finish	Code no.
Chrome	41722000

Optional parts:	Finish	Code no.
Replacement toilet brush with handle	Chrome	93286000

Measurements within scale drawings are in mm.
Technical specifications and units of measure are subject to change.

Logis Universal Shaving mirror

Features

- material: mirror glass
- material frame: metal
- mirror is inclinable
- swivelling
- enlargement: 1 x magnification, 3 x magnification
- with mounting material
- concealed fastening
- drilling distance: 50 mm
- diameter drill hole: 6 mm
- wall-mounted

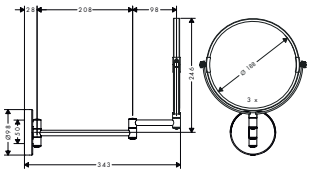

Finish	Code no.
Chrome	73561000

Logis Universal Bathroom accessory sets

Features of all variants

- material: brass

3-part

5-part

Overview variants

Set	Finish	Code no.
3 in 1	Chrome	41727000
5 in 1	Chrome	41728000

Measurements within scale drawings are in mm.
Technical specifications and units of measure are subject to change.

Replacement toilet brush with handle

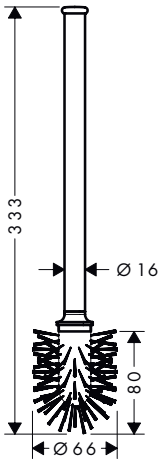

Finish	Code no.
Chrome	40089000

Replacement toilet brush without stick

Features

- material: plastic

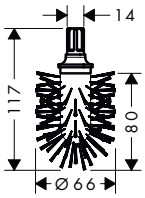

Finish	Code no.
White	40088000

Replacement toilet brush without stick

Features

- material: plastic

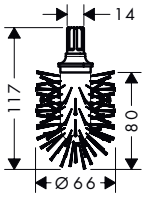

Finish	Code no.
Black	40068000

WallStoris Planet Edition Wall bar 70 cm

Features

- consists of: carrier bar, decorative bar
- wall-mounted
- suitable for horizontal and vertical installation
- horizontal installation suitable for wall bar
- ideal for tiles, glass, metal
- application - glue or drill
- including gluing set
- holding force: 5 kg
- material carrier bar: metal
- material decorative bar: plastic
- length: 700 mm
- concealed fastening
- drilling distance: 312 mm

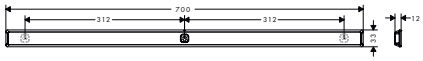

Installation

Finish	Code no.
Sand (recycled)	28911210

Optional parts:	Code no.
Mounting set (3 screws, 3 plugs)	94268000

WallStoris Planet Edition Storage basket

Features

- material: plastic dyed through
- recess for draining water
- dimensions: 250 x 39 mm
- accessory can be clicked onto the wall bar
- storage for squeegee
- ideal to store shampoo, shower gel, razors
- dishwasher safe, easy to clean

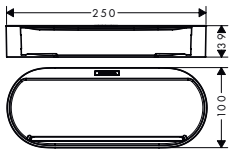

Installation

Finish	Code no.
Sand (recycled)	28912210

Required parts:	Finish	Code no.
WallStoris Planet Edition Wall bar 70 cm	Sand (recycled)	28911210

Optional parts:	Finish	Code no.
WallStoris Planet Edition Squeegee	Sand (recycled)	28913210

Measurements within scale drawings are in mm.
Technical specifications and units of measure are subject to change.

WallStoris Planet Edition Shelf

Features

- material shelf: plastic dyed through
- dimensions: 200 x 169 mm
- accessory can be clicked onto the wall bar
- ideal to store razors, mug, candles
- dishwasher safe, easy to clean

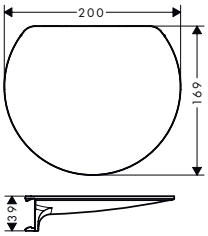

Installation

Finish	Code no.
Sand (recycled)	28917210

Required parts:

	Finish	Code no.
WallStoris Planet Edition Wall bar 70 cm	Sand (recycled)	28911210

WallStoris Planet Edition Towel hook wide

Features

- material: plastic dyed through
- accessory can be clicked onto the wall bar
- ideal to hang towels, face cloth, sponges, clothes
- dishwasher safe, easy to clean
- packaging unit: 2 pieces

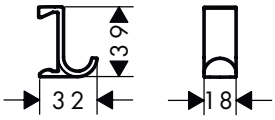

Installation

Finish	Code no.
Sand (recycled)	28915210

Required parts:

	Finish	Code no.

WallStoris Planet Edition Squeegee

Features

- material: plastic
- storage option in storage basket
- suitable for glass
- easy to clean
- ergonomic design
- dimensions: 195 x 44 mm

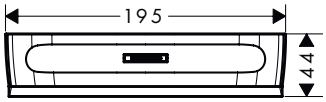

Finish	Code no.
Sand (recycled)	28913210

Optional parts:

	Finish	Code no.
WallStoris Planet Edition Storage basket	Sand (recycled)	28912210

Measurements within scale drawings are in mm.
Technical specifications and units of measure are subject to change.

WallStoris Planet Edition Push slider

Features

- wall-mounted
- screw fastening
- material: plastic
- for shower hoses with a conical nut
- height-adjustable slider with locking push-button slider
- push button slider has no angle adjustment
- slider is rotatable – can be used on vertical and horizontal wall bars
- slider rotatable on the pipe for left or right operation

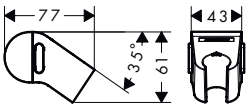

Technologies

Finish	Code no.
Sand (recycled)	28918210

Required parts:	Finish	Code no.
WallStoris Planet Edition Wall bar 70 cm	Sand (recycled)	28911210

WallStoris Planet Edition Tumbler

Features

- consists of: cup, partition wall
- material: plastic dyed through
- recess for draining water
- accessory can be clicked onto the wall bar
- ideal to store shampoo, razors, tooth paste
- with a partition that can be repositioned or removed
- dishwasher safe, easy to clean

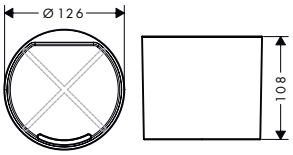

Installation

Finish	Code no.
Sand (recycled)	28916210

Required parts:	Finish	Code no.
WallStoris Planet Edition Wall bar 70 cm	Sand (recycled)	28911210

Measurements within scale drawings are in mm.
Technical specifications and units of measure are subject to change.

WallStoris Wall bars

Features of all variants

- consists of: carrier bar, decorative bar
- wall-mounted
- suitable for horizontal and vertical installation
- horizontal installation suitable for wall bar
- ideal for tiles, glass, metal
- application - glue or drill
- including gluing set
- holding force: 5 kg
- material carrier bar: metal
- material decorative bar: plastic
- concealed fastening

500

700

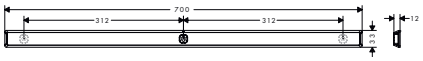

Installation

Overview variants

	Length (mm)	Finish	Code no.
	700	Matt Black	27904670
		Matt White	27904700
	500	Matt Black	27902670
		Matt White	27902700

Optional parts:		Code no.
	Mounting set (3 screws, 3 plugs)	94268000

WallStoris Storage baskets

Features of all variants

- material: plastic dyed through
- recess for draining water
- accessory can be clicked onto the wall bar
- storage for squeegee
- ideal to store shampoo, shower gel, razors
- dishwasher safe, easy to clean

71

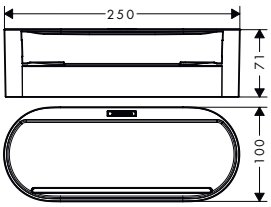

39

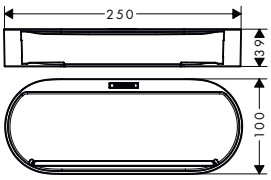

Installation

Overview variants

	Height (mm)	Finish	Code no.
	71	Matt Black	27912670
		Matt White	27912700
	39	Matt Black	27913670
		Matt White	27913700

For more information about this product, please see the next page.

Measurements within scale drawings are in mm.
Technical specifications and units of measure are subject to change.

WallStoris Storage baskets

Required parts (choose one):		Finish	Code no.
	WallStoris Wall bar 70 cm	Matt Black	27904670
		Matt White	27904700
	WallStoris Wall bar 50 cm	Matt Black	27902670
		Matt White	27902700

Optional parts:		Finish	Code no.
	WallStoris Squeegee	Matt Black	27916670
		Matt White	27916700
	WallStoris Cover for storage basket	Matt Black	27925670
		Matt White	27925700

WallStoris Shelf

Features

- material shelf: plastic dyed through
- dimensions: 200 x 169 mm
- accessory can be clicked onto the wall bar
- ideal to store razors, mug, candles
- dishwasher safe, easy to clean

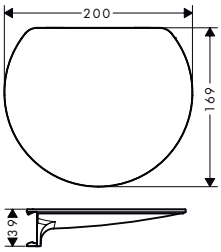

Installation

Finish	Code no.
Matt Black	27915670
Matt White	27915700

Required parts (choose one):		Finish	Code no.
	WallStoris Wall bar 50 cm	Matt Black	27902670
		Matt White	27902700
	WallStoris Wall bar 70 cm	Matt Black	27904670
		Matt White	27904700

WallStoris Towel hooks

Features of all variants

- material: plastic dyed through
- accessory can be clicked onto the wall bar
- ideal to hang towels, face cloth, sponges, clothes
- dishwasher safe, easy to clean
- packaging unit: 2 pieces

18 mm

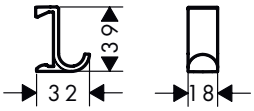

10 mm

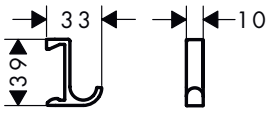

Installation

Overview variants

	Width (mm)	Finish	Code no.
	18	Matt Black	27914670
		Matt White	27914700

Measurements within scale drawings are in mm.
Technical specifications and units of measure are subject to change.

WallStoris Towel hooks

Overview variants

	Width (mm)	Finish	Code no.
	10	Matt Black	27929670
		Matt White	27929700

Required parts (choose one):		Finish	Code no.
	WallStoris Wall bar 70 cm	Matt Black	27904670
		Matt White	27904700
	WallStoris Wall bar 50 cm	Matt Black	27902670
		Matt White	27902700

WallStoris Towel rail

Features

- consists of: decorative bar, carrier bar
- wall-mounted
- ideal for tiles, glass, metal
- application - glue or drill
- including gluing set
- holding force: 5 kg
- material carrier bar: metal
- material decorative bar: plastic dyed through
- fixed
- length: 581 mm
- concealed fastening

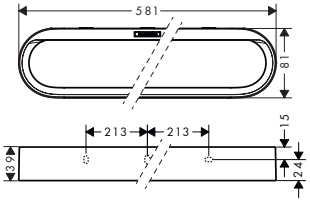

Installation

Finish	Code no.
Matt Black	27926670
Matt White	27926700

Optional parts:		Code no.
	Mounting set (3 screws, 3 plugs)	94268000

WallStoris Squeegee

Features

- material: plastic
- storage option in storage basket
- suitable for glass
- easy to clean
- ergonomic design
- dimensions: 195 x 44 mm

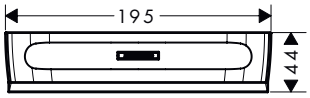

Finish	Code no.
Matt Black	27916670
Matt White	27916700

Optional parts:		Finish	Code no.
	WallStoris Storage basket deep	Matt Black	27912670
		Matt White	27912700
	WallStoris Storage basket	Matt Black	27913670
		Matt White	27913700

Measurements within scale drawings are in mm.
Technical specifications and units of measure are subject to change.

WallStoris Push slider

Features

- wall-mounted
- screw fastening
- material: plastic
- for shower hoses with a conical nut
- height-adjustable slider with locking push-button slider
- push button slider has no angle adjustment
- slider is rotatable – can be used on vertical and horizontal wall bars
- slider rotatable on the pipe for left or right operation

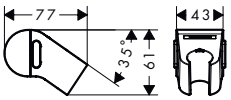

Technologies

Finish	Code no.
Matt Black	27917670
Matt White	27917700

Required parts:

	Finish	Code no.
WallStoris Wall bar 70 cm	Matt Black	27904670
	Matt White	27904700
WallStoris Wall bar 50 cm	Matt Black	27902670
	Matt White	27902700

WallStoris Cover for storage basket

Features

- material: plastic dyed through
- closes storage basket
- offers storage space
- dishwasher safe, easy to clean
- length: 250 mm

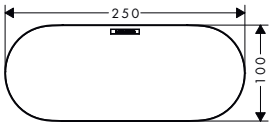

Finish	Code no.
Matt Black	27925670
Matt White	27925700

Required parts:

	Finish	Code no.
WallStoris Storage basket	Matt Black	27913670
	Matt White	27913700
WallStoris Storage basket deep	Matt Black	27912670
	Matt White	27912700

Measurements within scale drawings are in mm.
Technical specifications and units of measure are subject to change.

WallStoris Tumbler

Features

- consists of: cup, partition wall
- material: plastic dyed through
- recess for draining water
- accessory can be clicked onto the wall bar
- ideal to store shampoo, razors, tooth paste
- with a partition that can be repositioned or removed
- dishwasher safe, easy to clean

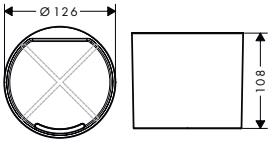

Installation

Finish	Code no.
Matt Black	27921670
Matt White	27921700

Required parts:

	Finish	Code no.
WallStoris Wall bar 50 cm	Matt Black	27902670
	Matt White	27902700
WallStoris Wall bar 70 cm	Matt Black	27904670
	Matt White	27904700

WallStoris Toilet paper holder with shelf

Features

- wall-mounted
- material: plastic dyed through
- with mounting material
- concealed fastening
- open form - toilet paper can easily be hung
- suitable for roll widths up to 122 mm
- with storage space
- application - glue or drill
- including gluing set
- length 230 mm

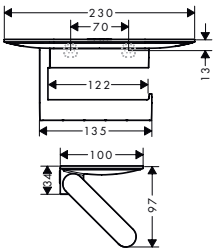

Installation

Finish	Code no.
Matt Black	27928670
Matt White	27928700

Optional parts:

	Code no.
Mounting set (3 screws, 3 plugs)	94268000

Measurements within scale drawings are in mm.
Technical specifications and units of measure are subject to change.

WallStoris Toilet brush holder

Features

- wall-mounted
- material: plastic dyed through
- material recess: matt plastic
- with removable insert
- concealed fastening
- removable container and easy to clean
- including toilet brush
- brush head black
- application - glue or drill
- including gluing set
- ergonomic handle

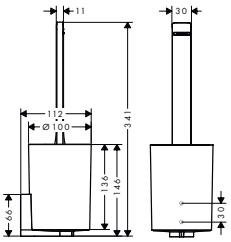

Installation

Finish	Code no.
Matt Black	27927670
Matt White	27927700

Optional parts:		Finish	Code no.
	Replacement toilet brush without stick	Black	40068000
	Mounting set (3 screws, 3 plugs)		94268000

WallStoris Shower bundle

Features

- consists of: wall bar, storage basket, squeegee, towel hook
- material: plastic dyed through
- wall-mounted
- ideal for tiles, glass, metal
- application - glue or drill
- including gluing set
- accessory can be clicked onto the wall bar
- storage for squeegee
- ideal to hang towels, face cloth, sponges, clothes
- ideal to store shampoo, shower gel, razors
- easy to clean
- concealed fastening
- recess for draining water

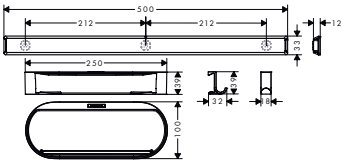

Installation

Finish	Code no.
Matt Black	27967670
Matt White	27967700

Measurements within scale drawings are in mm.
Technical specifications and units of measure are subject to change.

WallStoris Bathroom accessory sets

Features of all variants

- material: plastic dyed through
- application - glue or drill
- including gluing set
- concealed fastening

bathroom set

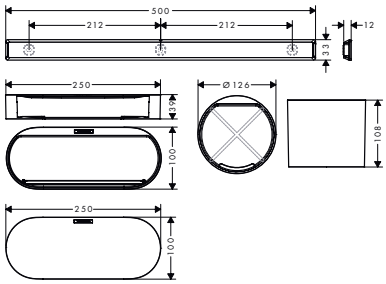

bathtub set

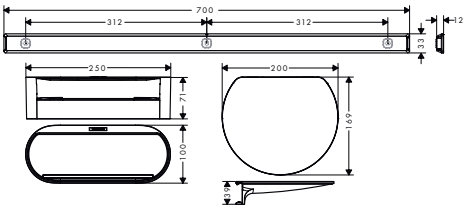

toilet set

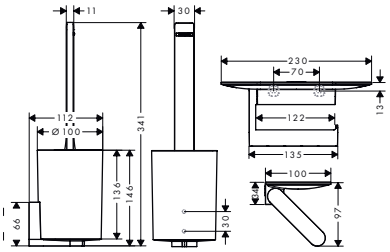

Installation

Overview variants

Set	Finish	Code no.
bathroom set	Matt Black	27968670
	Matt White	27968700
bathtub set	Matt Black	27966670
	Matt White	27966700
toilet set	Matt Black	27969670
	Matt White	27969700

Optional parts:		For	Finish	Code no.
	Replacement toilet brush without stick	27969XXX	Black	40068000
	Mounting set (3 screws, 3 plugs)	27969XXX		94268000

Measurements within scale drawings are in mm.
Technical specifications and units of measure are subject to change.

WallStoris Bundles

Features of all variants

- spray type hand shower: PowderRain, IntenseRain, MonoRain
- convenient spray selection via Select button
- shape: round
- swivel joint: pivot connector prevents hose from tangling
- maximum flow rate at 3 bar: 8,5 l/min
- installation: wall
- number of sprays: 3 spray modes
- shower head size: 105 mm
- dirt filter: rinseable sieve insert
- suitable for horizontal and vertical installation , application - glue or drill, holding force: 5 kg

with thermostat

without thermostat

Sustainability

EcoSmart

Technologies

Push slider

XXL Performance

Spray types

Intense Rain

Mono Rain

Powder Rain

Installation

EasyClick

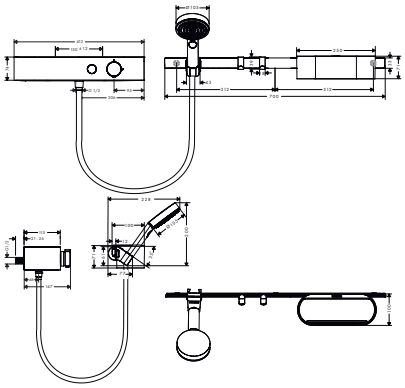

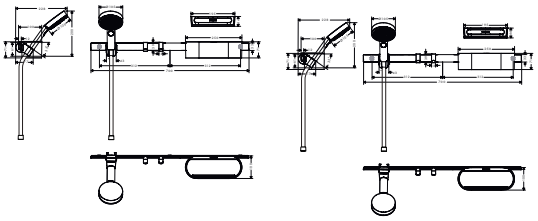

Overview variants

	Thermostat	Finish	Code no.
	with shower thermostat	Matt Black	24250670
		Matt White	24250700
	without thermostat	Matt Black	24291670
		Matt White	24291700

Optional parts:		For	Finish	Code no.
	S-connections adapter G ¾ for renovation	24250XXX	Chrome	02026000

Measurements within scale drawings are in mm.
Technical specifications and units of measure are subject to change.

Kitchen

Kitchen mixers	SodaSystem I FilterSystem Aqittura M91	680
	Aquno Select M81	684
	Metris Select M71	686
	Talis Select M51 I Talis M51	689
	Talis Select M54 PowderSpray I Talis M54	693
	Cento	700
	Focus M41 I Focus M42	701
	Zesis M33	710
	Logis M31 I Logis M32	715
	Vernis Blend M35 I Vernis Shape M35	719
	Filters & accessories	720
Kitchen sinks	S71 I S51	729
	Waste sets sinks	737

Kitchen mixers

Kitchen mixers

	Aqittura M91				Aquno Select M81
Finish					
ComfortZone	210	210	240	240	170
CoolStart	–	–	–	–	–
EcoSmart	–	–	–	–	■
EcoSelection	–	–	–	–	–
Number of sprays	1	1	1	1	3
Select	–	–	–	■	■
Pull out	■	■	–	–	■
sBox	■	■	–	–	■
sBox lite	■	–	–	–	–
For open water heaters	–	–	–	–	–
Installation in front of window	–	–	–	–	–
Device shutt-off valve	–	–	–	–	–
Drinking water systems	■	■	■	■	–
from page	680	682	681	683	684

	Talis M51		Talis Select M54 PowderSpray	Talis M54	
Finish					
ComfortZone	160/200	220/260	210	210/220	220
CoolStart	–	–	–	–	–
EcoSmart	■	■	■	■	–
EcoSelection	–	–	–	–	–
Number of sprays	2	1	3	1/2	1
Select	–	–	■	–	–
Pull out	■	–	–	■	–
sBox	■	–	–	■	–
sBox lite	–	–	–	–	–
For open water heaters	–	■	–	–	–
Installation in front of window	–	–	–	–	–
Device shutt-off valve	–	–	–	–	■
Drinking water systems	–	–	–	–	–
from page	691	692	693	693	695

■ available depending on the model
– not available

	Aquno Select M81	Metris Select M71			Talis Select M51
Finish					
ComfortZone	250	200	240/320	260/320	220/300
CoolStart	–	–	–	–	–
EcoSmart	■	–	–	–	■
EcoSelection	–	–	–	–	–
Number of sprays	2	2	2	1	1/2
Select	■	■	■	■	■
Pull out	■	■	■	–	■
sBox	■	■	■	–	■
sBox lite	–	–	–	–	–
For open water heaters	–	–	–	–	–
Installation in front of window	–	–	–	–	–
Device shutt-off valve	–	–	–	–	–
Drinking water systems	–	–	–	–	–
from page	685	686	687	688	689

	Talis M54				Cento
Finish					
ComfortZone	220	220	270	270	190
CoolStart	–	–	–	–	–
EcoSmart	■	–	■	–	–
EcoSelection	–	–	–	–	■
Number of sprays	1	1	1	1	2
Select	–	–	–	–	–
Pull out	–	–	■	–	–
sBox	–	–	■	–	–
sBox lite	–	–	–	–	–
For open water heaters	–	–	■	–	–
Installation in front of window	–	–	–	–	–
Device shutt-off valve	–	■	–	■	–
Drinking water systems	–	–	–	–	–
from page	696	696	697	699	700

Kitchen mixers

	Focus M41				
Finish					
ComfortZone	240	280	260	260	160
CoolStart	–	–	–	–	■
EcoSmart	■	■	■	–	■
EcoSelection	–	–	–	–	■
Number of sprays	2	1	1	1	1
Select	–	–	–	–	–
Pull out	■	–	–	–	–
sBox	–	–	–	–	–
sBox lite	–	–	–	–	–
For open water heaters	–	–	–	–	■
Installation in front of window	–	–	–	–	–
Device shutt-off valve	–	–	–	■	–
Drinking water systems	–	–	–	–	–
from page	701	701	702	703	704

	Focus M42	Zesis M33		Logis M31	
Finish					
ComfortZone	150	150/160	200	260	220
CoolStart	–	■	■	–	–
EcoSmart	■	■	■	■	–
EcoSelection	–	■	–	–	–
Number of sprays	1	1/2	1	1	1
Select	–	–	–	–	–
Pull out	■	■	–	–	–
sBox	–	■	–	–	–
sBox lite	–	■	–	–	–
For open water heaters	–	■	–	–	–
Installation in front of window	–	■	–	–	–
Device shutt-off valve	–	–	■	–	–
Drinking water systems	–	–	–	–	–
from page	709	710	714	715	715

■ available depending on the model
– not available

	Focus M41		Focus M42		
Finish					
ComfortZone	200	–	180/220	220	100/120
CoolStart	–	–	–	–	■
EcoSmart	–	–	–	–	■
EcoSelection	–	–	–	–	■
Number of sprays	1	1	1/2	1	1
Select	–	–	–	–	–
Pull out	–	–	■	–	–
sBox	–	–	–	–	–
sBox lite	–	–	–	–	–
For open water heaters	–	–	–	–	–
Installation in front of window	–	–	–	–	–
Device shutt-off valve	■	–	–	■	–
Drinking water systems	–	–	–	–	–
from page	705	706	706	707	708

	Logis M31		Logis M32	Vernis Blend M35	Vernis Shape M35
Finish					
ComfortZone	120/160	–	–	210	210
CoolStart	■	–	–	–	–
EcoSmart	–	–	–	–	–
EcoSelection	■	–	–	–	–
Number of sprays	1	1	1	1	1
Select	–	–	–	–	–
Pull out	–	–	–	–	–
sBox	–	–	–	–	–
sBox lite	–	–	–	–	–
For open water heaters	■	–	–	–	–
Installation in front of window	■	–	–	–	–
Device shutt-off valve	–	–	–	–	–
Drinking water systems	–	–	–	–	–
from page	716	718	718	719	719

Sustainability

CoolStart

With this energy saving tap hot water only flows when the lever is actively moved - while standard taps already consume energy when the lever is opened in the basic position. CoolStart supports reducing the resources used, CO2 emissions and costs.

EcoSelection

Effortless water saving: The special Eco cartridge indicates with a slight resistance that about half of the flow rate has been reached. However, if more water is needed, the flow can easily be increased.

EcoSmart

This tap needs just 6 l/min – significantly less water than our standard taps and with no loss of comfort. And it also reduces energy costs, as just a fraction of the water used in standard taps needs to be heated. What a way to conserve resources!

Technologies

ComfortZone

Describes the large space between the kitchen tap and sink – vertically and horizontally. These high-quality taps are very user-friendly and have a flexible swivel area. For maximum room to move.

hansgrohe home App

The app provides important information about the kitchen tap. It notifies users when the filter or CO2 cartridge needs to be replaced. It reports malfunctions and sends push notifications to smartphones on request.

LowPressure

Low water pressure? No problem. Kitchen taps fitted with low-pressure technology can be used with a water pressure as low as 0.2 bar. Suitable for boilers and heat exchangers.

Technologies

MemoryFunction

Custom settings can be stored to fill various drinking vessels – the water automatically stops once the preset amount has been poured. Simply enter the amount of water and double click the start button for the water to flow.

Pull-out

More comfort and room to move: Pull-out sprays or pull-out spouts expand the operating radius around the kitchen sink to take water to exactly where it's needed in just one motion.

Push

User-friendly, multi-function, high-quality: Get filtered or mineralized water from this kitchen tap at the touch of a button. With the integrated valve, the purified water will run as long as the button remains pressed.

QuickClean

Who actually likes cleaning? Limescale deposits and dirt disappear in an instant with this technology. Simply rub the flexible silicone discs or nozzles with a finger. It's fast and keeps cleaning to a minimum.

sBox

Ensures that the hose on pull-out kitchen taps is smoothly, silently, safely and securely pulled out and retracted. Thanks to the sBox, the pull-out spray can be extended to max. 76 cm. It fits into all standard base units.

sBox lite

The compact sBox lite fits into any base unit and enables safe, flexible and smooth hose handling. Thanks to the clever mechanism, pull-out sprays can be effortlessly extended by up to 50 cm and returned to their position.

Technologies

Select Digital

Still, medium or sparkling at the touch of a button. This kitchen tap provides the customer's choice of heated, filtered or mineralized drinking water in three different types. The water flow can be simply started or stopped by pressing the button.

AirPower

Mixes generous quantities of air into the water. The enriched droplets are luxurious, light and soothing on the skin and cause less splash in the wash basin. For a more efficient use of the precious resource that is water.

Select

Fans of user-friendliness can now conveniently start and stop the flow of water at the touch of a button. For accurate, ergonomic and easy water controls that can be operated with the back of the hand or an elbow.

TiltFunction

The sink is in front of the window, which opens inwardly? Here's the perfect solution for the space issue: The kitchen tap can be easily removed from its holder and placed on the sink.

TwoOutlets

Two water pipes in this tap ensure that optimised and standard tap water are always kept separate from one another. This provides reassurance that the customer is getting the right water quality from the tap.

Installation

MagFit

Extra comfort after use: The flexible shower hose gently swivels back into place. The magnetic holder ensures it is held front and center on the faucet.

MovaFlex

Flexible helper that optimizes processes in daily kitchen routines. Pots and containers can be conveniently filled and the sink effortlessly cleaned using the movable hose.

Spray types

NormalSpray

Air-enriched water spray with a really nice feel. Air is mixed in to create a fuller, lighter and softer spray that is an efficient help with every activity at the kitchen sink.

PowderSpray

Gentle, microfine water jet causes little splash when rinsing items in the sink to ensure less cleaning after use. Its low consumption of 5 l/min also helps people to use water efficiently. The flat sprays cascade from beneath the faucet spout.

SatinFlowSpray

Micro-fine, resource-saving spray type that can be used to clean sensitive foods extremely gently. The wide water spray flows from the base of the tap, causing very little splashback in the sink.

Spray types

ShowerSpray

Resource-saving shower spray at the sink. Whether fruit or vegetables, fish or meat, the soft spray helps to gently yet efficiently clean food and other items.

LaminarSpray

Crystal-clear spray type with no added air for the sink. This spray is a great help when going through the day-to-day kitchen routine, e.g. quickly filling large pots or bowls. Efficient with very little splash-back.

Finish

Brushed Black Chrome

-340

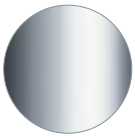

Chrome

-000

Matt Black

-670

Stainless Steel Finish

-800

	Activated carbon filter	Ion exchanger and activated carbon filter	Harmony mineralisation and filter	Life mineralisation and filter	Sport mineralisation and filter
Filtration					
Protects against limescale	–	■	–	–	–
Enriches low-mineral water	–	–	–	–	–
Optimises flavour	■	■	■	■	■
Filters particles	■	■	■	■	■
Reduces organic contaminants	■	■	■	■	■
Reduces heavy metals	■	■	■	■	■
Filters microplastics (5µ)	■	■	–	–	–
Capacity (ca.)	4000 litres	800 or 1100 litres	300 litres	300 litres	300 litres
Recommended life time	12 months	12 months	6 months	6 months	6 months
Recommended for hard water	Universal use	From 14°dH	Universal use	Under 10°dH	Universal use
Ingredients	Activated carbon	Activated carbon, ion-exchange resin	Magnesium, potassium, activated carbon	Magnesium, calcium, potassium, activated carbon	Magnesium, sodium, potassium, activated carbon
Mineralisation					
Addition of magnesium	–	–	60 mg/l	30 mg/l	55 mg/l
Addition of potassium	–	–	25 mg/l	15 mg/l	40 mg/l
Addition of calcium	–	–	–	70 mg/l	–
Addition of sodium	–	–	–	–	50 mg/l

■ May be available depending on the model
– Not available

Aqittura M91 SodaSystem

Features of all variants

- consists of: single lever kitchen mixer, hose box, filterhead, mineralisation cartridge Harmony with filter, SodaBase
- not included: CO2 bottle
- ComfortZone 210
- swivel range adjustable in 3 steps 60°, 110° or 150°
- laminar spray
- maximum flow rate at 3 bar: 6,2 l/min
- ceramic cartridge
- connection type: G ⅜ hose connections
- integrated non-return valve
- suitable for continuous flow water heaters
- tap hole with Ø 35 mm required
- separate water supply for filtered and unfiltered water
- cooled, filtered drinking water in still, medium and sparkling via selection button on the spout
- control and monitoring of consumption data via hansgrohe home App
- filter capacity: 300 l
- cooling capacity: 7 l/h cooled/filtered water
- push notification for low filter or CO2 capacity (hansgrohe home App)
- power consumption: 240 W (water release), 180 W (cooling phase), 3 W (standby)
- power supply: 230V ±10 %
- maximum withdrawal quantity (cooled/sparkling water): 2 l/min

Technologies

Spray types

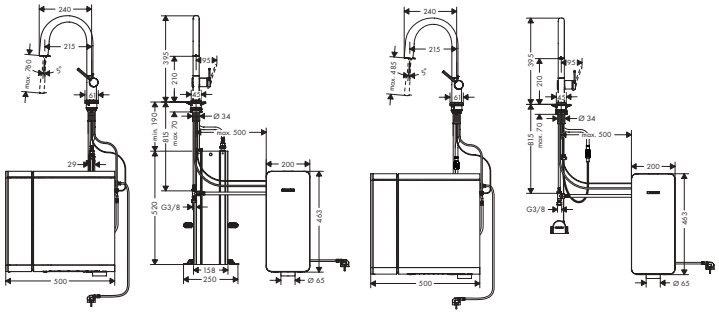

Overview variants

ComfortZone	Hose retraction	Extension length (cm)	Max. flow rate at 3 bar (l/min)	Finish	Code no.
210	sBox	up to 76 cm	6.2	Chrome	76836000
				Matt Black	76836670
				Stainless Steel Finish	76836800
210	sBox lite	up to 48,5 cm	6.2	Chrome	76838000
				Matt Black	76838670
				Stainless Steel Finish	76838800

Optional parts:	Code no.
Filter active carbon	76814000
Filter ion exchanger and active carbon	76815000
Filter ion exchanger Pro and active carbon	76827000
Mineralisation and filter Harmony	76828000
Mineralisation and filter Life	76829000
Mineralisation and filter Sport	76830000

Measurements within scale drawings are in mm.
Technical specifications and units of measure are subject to change.

Aqittura M91 SodaSystem 240, 1jet

Features

- consists of: single lever kitchen mixer, filterhead, mineralisation cartridge Harmony with filter, SodaBase
- not included: CO2 bottle
- ComfortZone 240
- l-spout
- swivel range adjustable in 2 steps 60° or 110°
- laminar spray
- device connection DN20
- maximum flow rate at 3 bar: 6,5 l/min
- ceramic cartridge
- connection type: G ⅜ hose connections
- integrated non-return valve
- suitable for continuous flow water heaters
- tap hole with Ø 35 mm required
- separate water supply for filtered and unfiltered water
- cooled, filtered drinking water in still, medium and sparkling via selection button on the spout
- control and monitoring of consumption data via hansgrohe home App
- filter capacity: 300 l
- cooling capacity: 7 l/h cooled/filtered water
- push notification for low filter or CO2 capacity (hansgrohe home App)
- power consumption: 240 W (water release), 180 W (cooling phase), 3 W (standby)
- power supply: 230V ±10 %
- maximum withdrawal quantity (cooled/sparkling water): 2 l/min

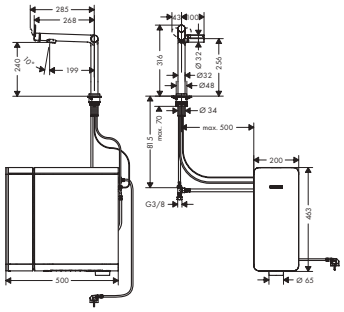

Technologies

Comfort Zone | hansgrohe home App | Memory Function | Select Digital | Two Outlets

Spray types

Laminar Spray

Finish	Code no.
Chrome	76837000
Matt Black	76837670
Stainless Steel Finish	76837800

Optional parts:	Code no.
Filter active carbon	76814000
Filter ion exchanger and active carbon	76815000
Filter ion exchanger Pro and active carbon	76827000
Mineralisation and filter Harmony	76828000
Mineralisation and filter Life	76829000
Mineralisation and filter Sport	76830000

Measurements within scale drawings are in mm.
Technical specifications and units of measure are subject to change.

Aqittura M91 FilterSystem with pull-out spout

Features of all variants

- ComfortZone 210
- swivel range adjustable in 3 steps 60°, 110° or 150°
- laminar spray
- maximum flow rate at 3 bar: 6,5 l/min
- ceramic cartridge
- connection type: G ⅜ hose connections
- integrated non-return valve
- suitable for continuous flow water heaters
- tap hole with Ø 35 mm required
- separate water supply for filtered and unfiltered water
- filtered still drinking water via push button at the spout
- filter connection: G ⅜ input and output
- maximum withdrawal quantity (filtered water): 1,8 l/min

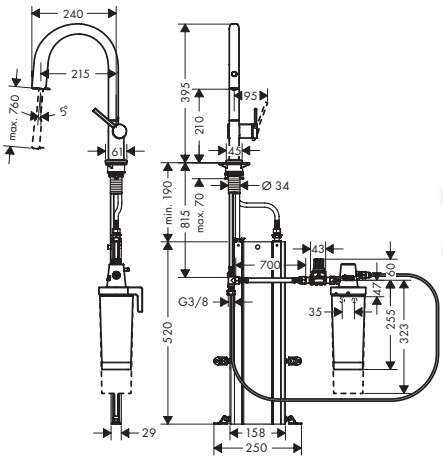

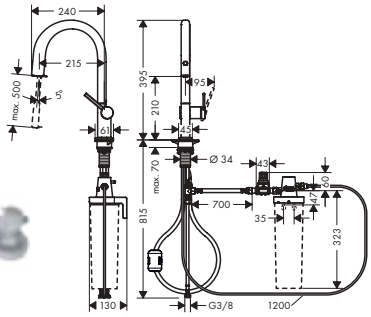

Technologies

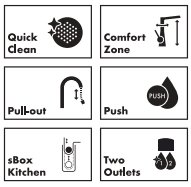

Spray types

Overview variants

ComfortZone	Hose retraction	Extension length (cm)	Set	Finish	Code no.
210	sBox	up to 76 cm	with filter Harmony	Chrome	76800000
				Matt Black	76800670
				Stainless Steel Finish	76800800
210	weight	up to 50 cm	with filter Harmony	Chrome	76801000
				Matt Black	76801670
				Stainless Steel Finish	76801800
210	sBox	up to 76 cm	without filter	Chrome	76826000
				Matt Black	76826670
				Stainless Steel Finish	76826800
210	weight	up to 50 cm	without filter	Chrome	76803000
				Matt Black	76803670
				Stainless Steel Finish	76803800

Optional parts:		Code no.
	Filter active carbon	76814000
	Filter ion exchanger and active carbon	76815000
	Filter ion exchanger Pro and active carbon	76827000
	Mineralisation and filter Harmony	76828000
	Mineralisation and filter Life	76829000
	Mineralisation and filter Sport	76830000
	F23 Flowmeter	76818000

Measurements within scale drawings are in mm.
Technical specifications and units of measure are subject to change.

Aqittura M91 FilterSystem with swivel spout

Features of all variants

- ComfortZone 240
- l-spout
- swivel range adjustable in 2 steps 60° or 110°
- laminar spray
- maximum flow rate at 3 bar: 7 l/min
- ceramic cartridge
- connection type: G ⅜ hose connections
- integrated non-return valve
- suitable for continuous flow water heaters
- tap hole with Ø 35 mm required
- separate water supply for filtered and unfiltered water
- filtered still drinking water via Select button
- filter connection: G ⅜ input and output

Technologies

Spray types

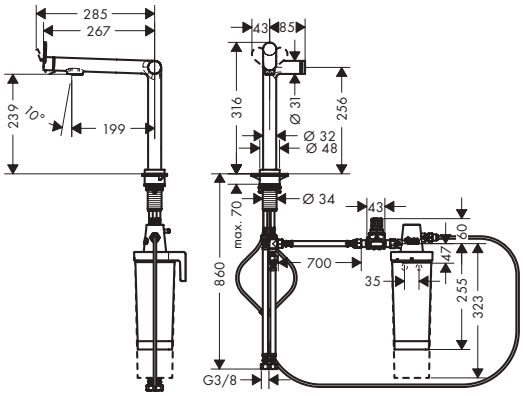

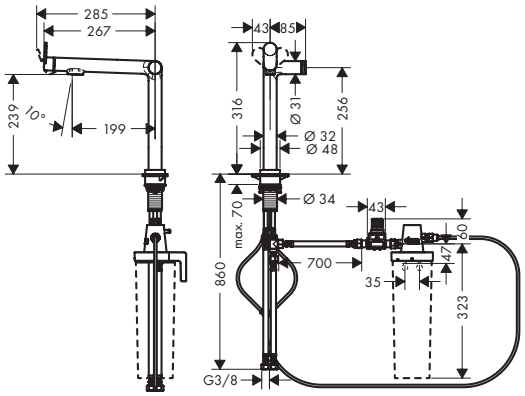

Overview variants

ComfortZone	Set	Finish	Code no.
240	with filter Harmony	Chrome	76802000
		Matt Black	76802670
		Stainless Steel Finish	76802800
240	without filter	Chrome	76804000
		Matt Black	76804670
		Stainless Steel Finish	76804800

Optional parts:		Code no.
	Filter active carbon	76814000
	Filter ion exchanger and active carbon	76815000
	Filter ion exchanger Pro and active carbon	76827000
	Mineralisation and filter Harmony	76828000
	Mineralisation and filter Life	76829000
	Mineralisation and filter Sport	76830000
	F23 Flowmeter	76818000

Measurements within scale drawings are in mm.
Technical specifications and units of measure are subject to change.

Aquno Select M81 Single lever kitchen mixers, pull-out spray, 3jet

Features of all variants

- ComfortZone 170
- swivel range adjustable in 3 steps 60°, 110° or 150°
- laminar spray, shower spray, SatinFlow
- change between SatinFlow and pull-out spray at the touch of a button
- lockable shower spray, spray returns through pressing spray diverter
- MagFit magnetic shower support
- connection dimension: DN15
- ceramic cartridge
- connection type: G ⅜ hose connections
- integrated non-return valve
- not suitable for continuous flow water heaters
- tap hole with Ø 35 mm required, recommendation: the middle of tap hole drilling should be max. 50 mm from the back side of of the bowl

Sustainability

EcoSmart

Technologies

Quick Clean | Comfort Zone | Pull-out | sBox Kitchen | Select

Spray types

Laminar Spray | Satin Flow Spray | Shower Spray

Installation

Mag Fit

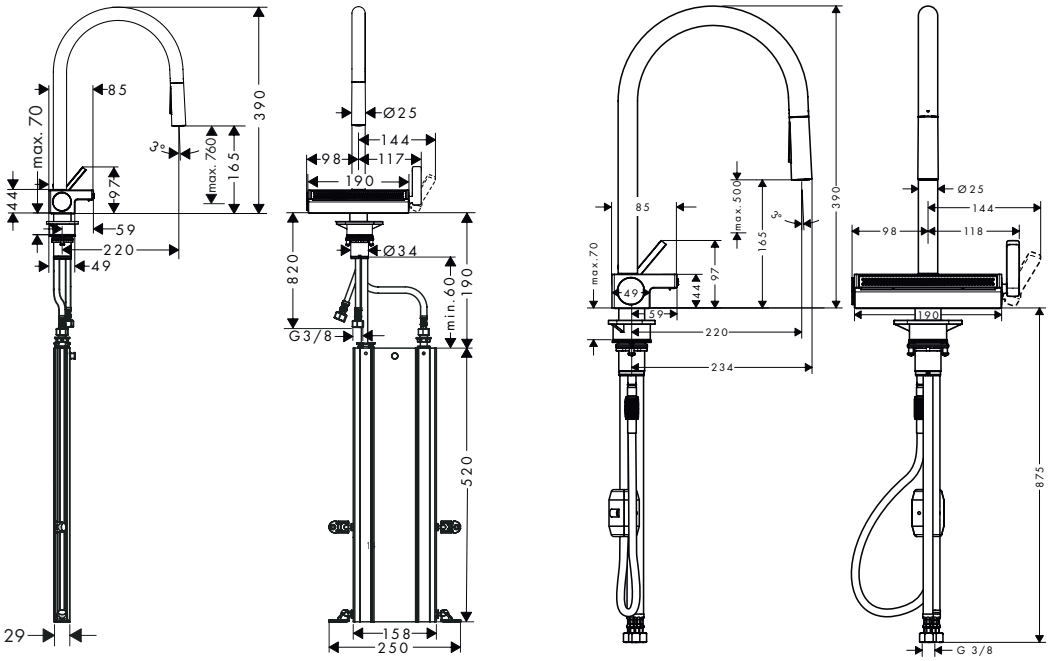

Overview variants

ComfortZone	Hose retraction	Extension length (cm)	Max. flow rate at 3 bar (l/min)	Finish	Code no.
170	sBox	up to 76 cm	6	Chrome	73831000
				Matt Black	73831670
				Stainless Steel Finish	73831800
170	weight	up to 50 cm	7	Chrome	73837000
				Matt Black	73837670
				Stainless Steel Finish	73837800

Measurements within scale drawings are in mm.
Technical specifications and units of measure are subject to change.

Aquno Select M81 Single lever kitchen mixers, pull-out spout, 2jet

Features of all variants

- ComfortZone 250
- l-spout
- swivel range adjustable in 3 steps 60°, 110° or 150°
- laminar spray, SatinFlow
- change between SatinFlow and pull-out spout at the touch of a button
- MagFit magnetic shower support
- connection dimension: DN15
- ceramic cartridge
- connection type: G ⅜ hose connections
- integrated non-return valve
- not suitable for continuous flow water heaters
- tap hole with Ø 35 mm required, recommendation: the middle of tap hole drilling should be max. 50 mm from the back side of of the bowl

Sustainability

EcoSmart

Technologies

Quick Clean | Comfort Zone | Pull-out | sBox Kitchen | Select

Spray types

Laminar Spray | Satin Flow Spray

Installation

Mag Fit

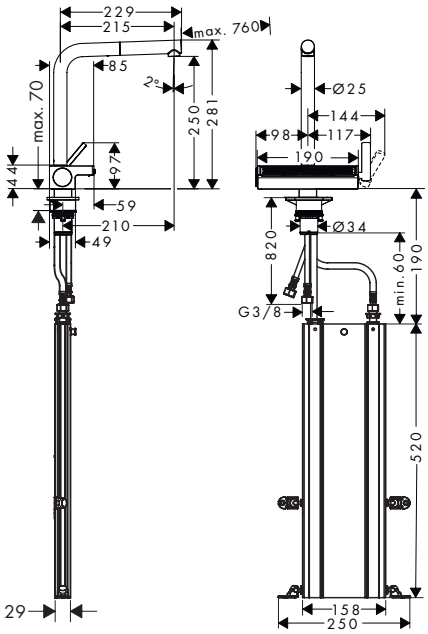

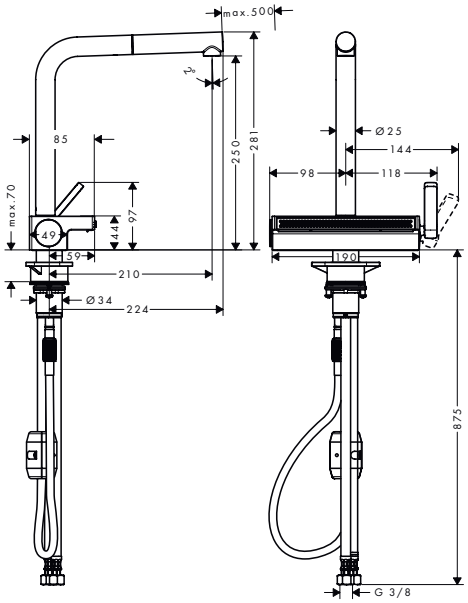

Overview variants

ComfortZone	Hose retraction	Extension length (cm)	Max. flow rate at 3 bar (l/min)	Finish	Code no.
250	sBox	up to 76 cm	6	Chrome	73830000
				Matt Black	73830670
				Stainless Steel Finish	73830800
250	weight	up to 50 cm	7	Chrome	73836000
				Matt Black	73836670
				Stainless Steel Finish	73836800

Measurements within scale drawings are in mm.
Technical specifications and units of measure are subject to change.

Metris Select M71 2-hole single lever kitchen mixers, pull-out spray, 2jet

Features of all variants

- ComfortZone 200
- swivel range adjustable in 2 steps to 110° or 150°
- flexible position of faucet controls, 2 tap holes with Ø 35 mm required
- laminar spray, shower spray
- lockable shower spray, spray returns through pressing spray diverter and spray returns automatically through handle closing
- Select button for a comfortable start/stop of the water flow
- MagFit magnetic shower support
- connection dimension: DN15
- ceramic cartridge
- connection type: G ⅜ hose connections
- integrated non-return valve
- suitable for continuous flow water heaters

Technologies

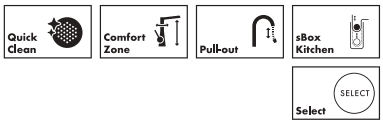

Spray types

Installation

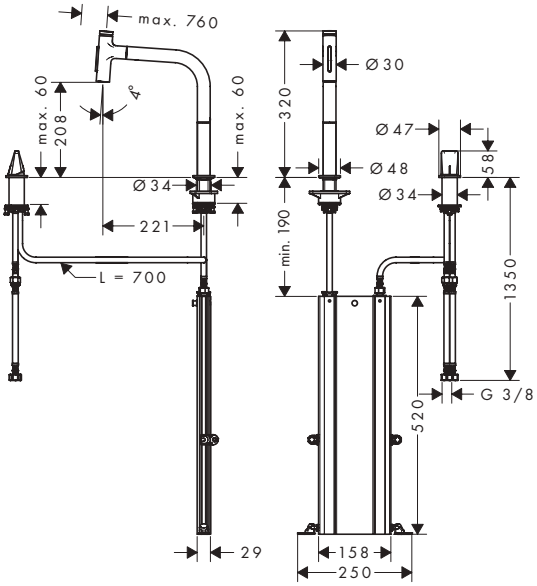

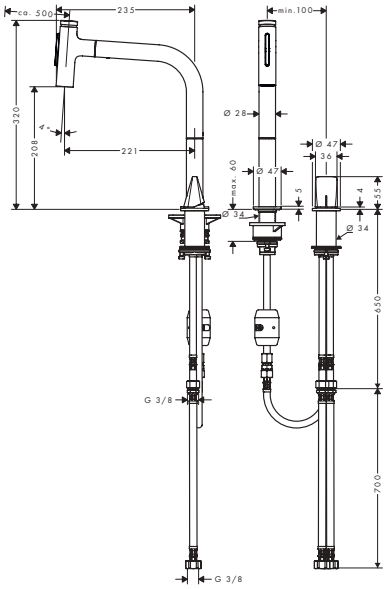

Overview variants

ComfortZone	Hose retraction	Extension length (cm)	Max. flow rate at 3 bar (l/min)	Finish	Code no.
200	sBox	up to 76 cm	8	Chrome	73818000
				Brushed Black Chrome	73818340
				Matt Black	73818670
				Stainless Steel Finish	73818800
200	weight	up to 50 cm	7	Chrome	73819000
				Stainless Steel Finish	73819800

Measurements within scale drawings are in mm.
Technical specifications and units of measure are subject to change.

Metris Select M71 Single lever kitchen mixers, pull-out spray, 2jet

Features of all variants

- swivel range adjustable in 2 steps to 110° or 150°
- laminar spray, shower spray
- lockable shower spray, spray returns through pressing spray diverter and spray returns automatically through handle closing
- Select button for a comfortable start/stop of the water flow
- MagFit magnetic shower support
- connection dimension: DN15
- ceramic cartridge
- connection type: G ⅜ hose connections
- temperature limitation adjustable
- integrated non-return valve
- suitable for continuous flow water heaters

240

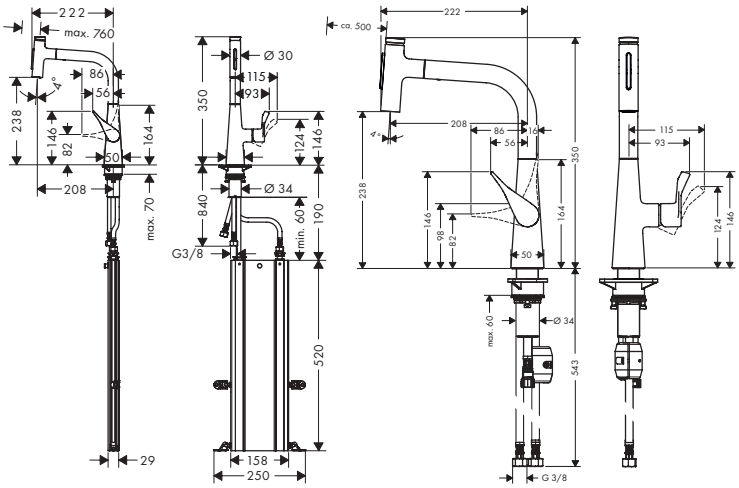

320

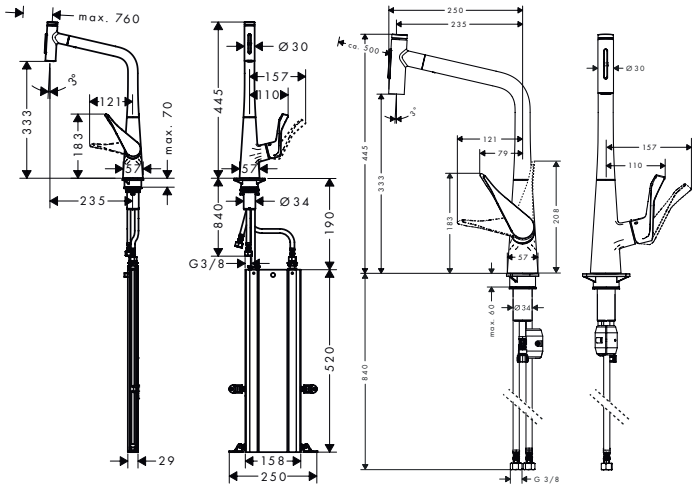

Technologies

Quick Clean | Comfort Zone | Pull-out | sBox Kitchen | Select

Spray types

Laminar Spray | Shower Spray

Installation

Mag Fit

Overview variants

ComfortZone	Hose retraction	Extension length (cm)	Max. flow rate at 3 bar (l/min)	Finish	Code no.
240	sBox	up to 76 cm	7	Chrome	73817000
				Stainless Steel Finish	73817800
240	weight	up to 50 cm	7	Chrome	73822000
				Stainless Steel Finish	73822800
320	sBox	up to 76 cm	8	Chrome	73816000
				Stainless Steel Finish	73816800
320	weight	up to 50 cm	8	Chrome	73820000
				Stainless Steel Finish	73820800

Measurements within scale drawings are in mm.
Technical specifications and units of measure are subject to change.

Metris Select M71 Single lever kitchen mixers, 1jet

Features of all variants

- l-spout
- swivel range adjustable in 3 steps 110°, 150° or 360°
- laminar spray
- Select button for a comfortable start/stop of the water flow
- connection dimension: DN15
- ceramic cartridge
- connection type: G ⅜ hose connections
- temperature limitation adjustable
- integrated non-return valve
- suitable for continuous flow water heaters
- significantly reduced splashing by soft start of the water flow

260

320

Technologies

Spray types

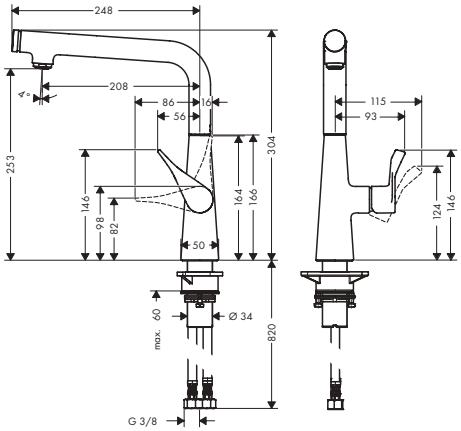

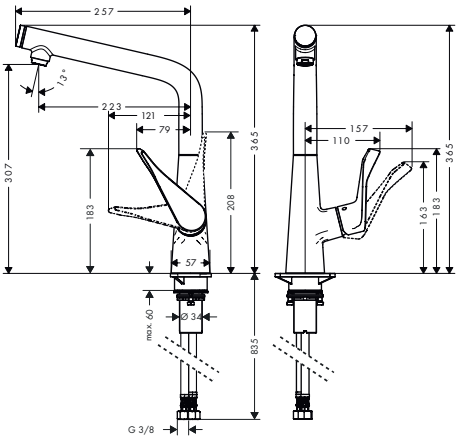

Overview variants

ComfortZone	Max. flow rate at 3 bar (l/min)	Finish	Code no.
260	9	Chrome	14847000
		Stainless Steel Finish	14847800
320	8	Chrome	14883000
		Stainless Steel Finish	14883800

Measurements within scale drawings are in mm.
Technical specifications and units of measure are subject to change.

Talis Select M51 Single lever kitchen mixers, pull-out spray, 2jet

Features of all variants

- swivel range adjustable in 2 steps to 110° or 150°
- laminar spray, shower spray
- lockable shower spray, spray returns through pressing spray diverter and spray returns automatically through handle closing
- Select button for a comfortable start/stop of the water flow
- MagFit magnetic shower support
- connection dimension: DN15
- ceramic cartridge
- connection type: G ⅜ hose connections
- temperature limitation adjustable
- integrated non-return valve
- suitable for continuous flow water heaters

220

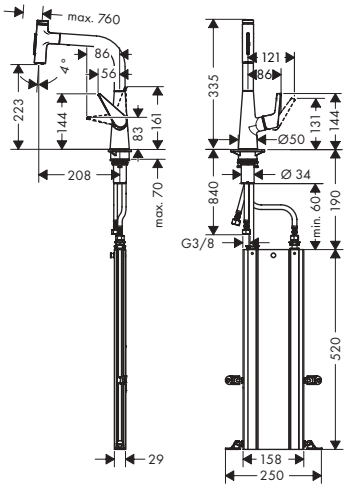

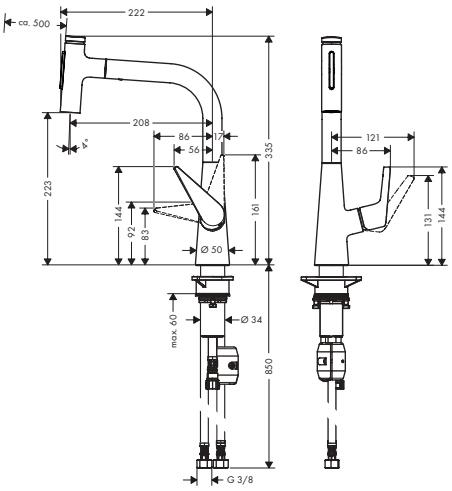

300

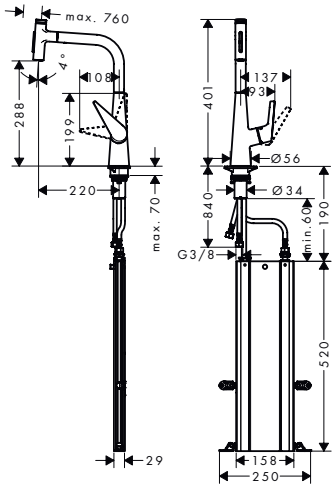

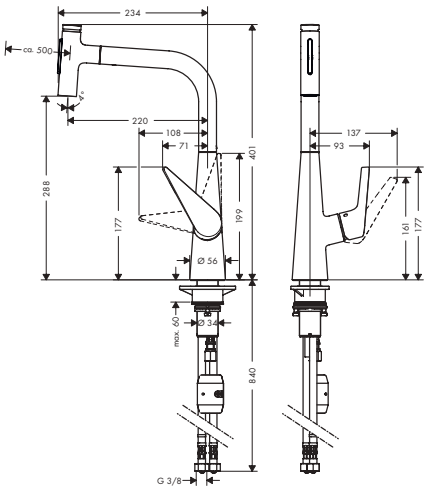

Technologies

Spray types

Installation

Overview variants

ComfortZone	Hose retraction	Extension length (cm)	Max. flow rate at 3 bar (l/min)	Finish	Code no.
220	sBox	up to 76 cm	8	Chrome	73868000
				Stainless Steel Finish	73868800
220	weight	up to 50 cm	7	Chrome	72824000
				Stainless Steel Finish	72824800
300	sBox	up to 76 cm	8	Chrome	73867000
				Stainless Steel Finish	73867800
300	weight	up to 50 cm	8	Chrome	72823000
				Stainless Steel Finish	72823800

Measurements within scale drawings are in mm.
Technical specifications and units of measure are subject to change.

Talis Select M51 Single lever kitchen mixers, pull-out spout, 1jet

Features of all variants

- swivel range adjustable in 2 steps to 110° or 150°
- normal spray
- Select button for a comfortable start/stop of the water flow
- MagFit magnetic shower support
- connection dimension: DN15
- ceramic cartridge
- connection type: G ⅜ hose connections
- temperature limitation adjustable
- integrated non-return valve
- suitable for continuous flow water heaters
- extension length up to 50 cm

220

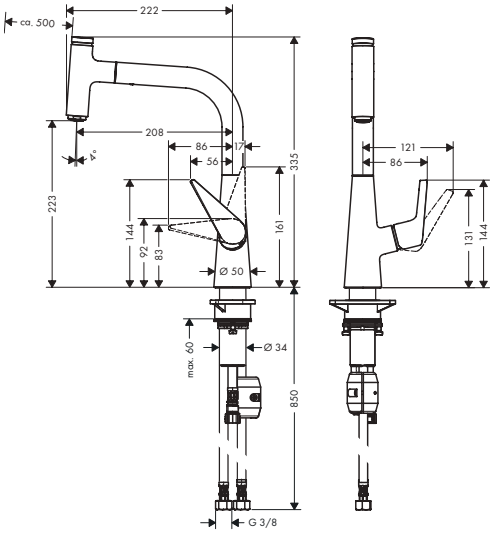

300

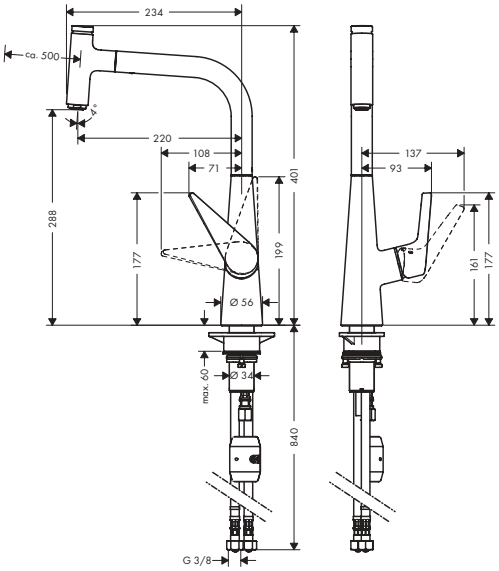

Sustainability

EcoSmart

Technologies

Quick Clean | AirPower | Comfort Zone | Pull-out | Select

Spray types

Normal Spray

Installation

Mag Fit

Overview variants

ComfortZone	Hose retraction	Extension length (cm)	EcoSmart	Max. flow rate at 3 bar (l/min)	Finish	Code no.
220	weight	up to 50 cm	–	8	Chrome	72822000
					Stainless Steel Finish	72822800
300	weight	up to 50 cm	–	8	Chrome	72821000
					Stainless Steel Finish	72821800
300	weight	up to 50 cm	■	4.4	Chrome	72826000

Measurements within scale drawings are in mm.
Technical specifications and units of measure are subject to change.

Talis M51 Single lever kitchen mixers, pull-out spray, 2jet

Features of all variants

- swivel range adjustable in 2 steps to 110° or 150°
- laminar spray, shower spray
- lockable shower spray, spray returns through pressing spray diverter
- MagFit magnetic shower support
- connection dimension: DN15
- ceramic cartridge
- connection type: G ⅜ hose connections
- temperature limitation adjustable
- integrated non-return valve
- suitable for continuous flow water heaters

160

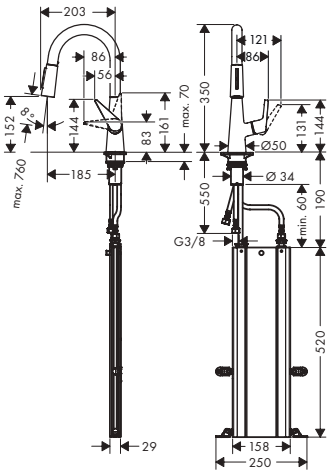

200

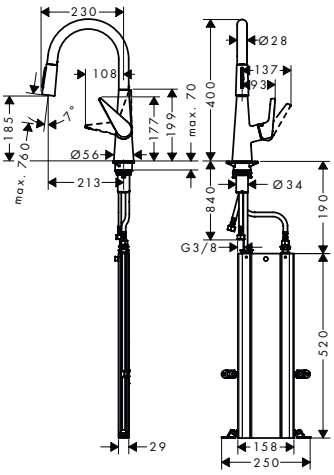

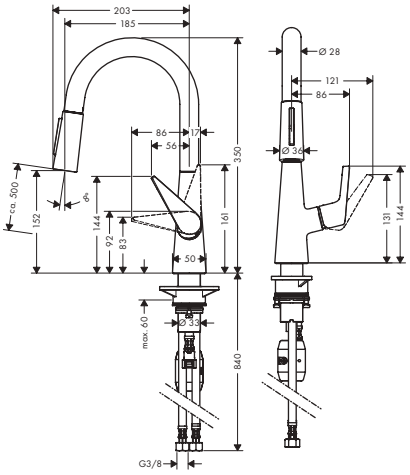

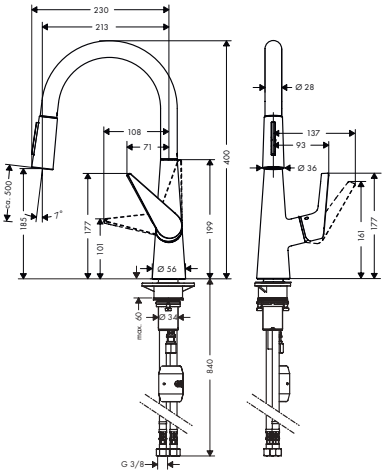

Sustainability

EcoSmart

Technologies

Quick Clean | Comfort Zone | Pull-out | sBox Kitchen

Spray types

Laminar Spray | Shower Spray

Installation

Mag Fit

Certificates/declarations

EPD

Overview variants

ComfortZone	Hose retraction	Extension length (cm)	EcoSmart	Max. flow rate at 3 bar (l/min)	Finish	Code no.
160	sBox	up to 76 cm	–	9	Chrome	73850000
					Stainless Steel Finish	73850800
160	weight	up to 50 cm	–	9	Chrome	72815000
					Stainless Steel Finish	72815800
200	sBox	up to 76 cm	–	9	Chrome	73851000
					Stainless Steel Finish	73851800
200	sBox	up to 76 cm	■	4.8	Chrome	73876000
200	weight	up to 50 cm	–	9	Chrome	72813000
					Stainless Steel Finish	72813800
200	weight	up to 50 cm	■	4.7	Chrome	72817000

Measurements within scale drawings are in mm.
Technical specifications and units of measure are subject to change.

Talis M51 Single lever kitchen mixers, 1jet

Features of all variants

- swivel range adjustable in 3 steps 110°, 150° or 360°
- normal spray
- connection dimension: DN15
- ceramic cartridge
- connection type: G ⅜ hose connections
- temperature limitation adjustable
- suitable for continuous flow water heaters

220

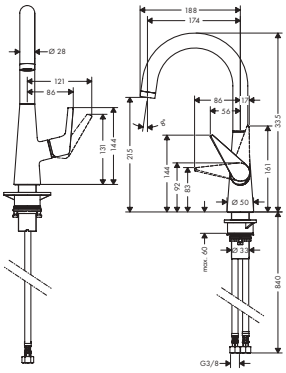

260

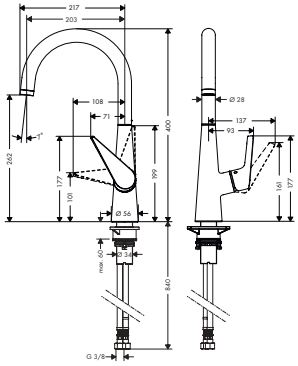

Sustainability

EcoSmart

Technologies

Quick Clean | AirPower | Comfort Zone

Spray types

Normal Spray

Certificates/declarations

EPD

Overview variants

ComfortZone	EcoSmart	Max. flow rate at 3 bar (l/min)	Finish	Code no.
220	–	10	Chrome	72814000
			Stainless Steel Finish	72814800
260	–	10	Chrome	72810000
			Stainless Steel Finish	72810800
260	■	4.5	Chrome	72816000

Talis M51 Single lever kitchen mixer 260, LowPressure/vented hot water cylinders, 1jet

Features

- for vented hot water cylinders (no pressure)
- ComfortZone 260
- swivel range adjustable in 3 steps 110°, 150° or 360°
- normal spray
- connection dimension: DN15
- maximum flow rate at 3 bar: 5 l/min
- ceramic cartridge
- connection type: G ⅜ hose connections
- temperature limitation adjustable
- not suitable for continuous flow water heaters
- EU taxonomy: max. 6 l/min - Substantial Contribution (SC) possible

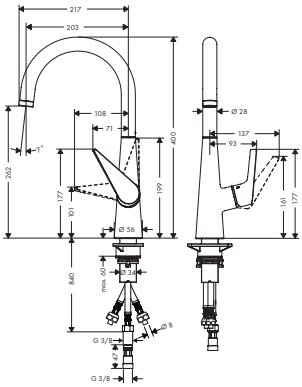

Technologies

AirPower | Comfort Zone | Low Pressure

Spray types

Normal Spray

Finish	Code no.
Chrome	72812000

Measurements within scale drawings are in mm.
Technical specifications and units of measure are subject to change.

Talis Select M54 PowderSpray Single lever kitchen mixer Semi-Pro, 3jet

Features

- ComfortZone 210
- swivel range adjustable in 4 steps 60°, 110°, 150° or 360°
- PowderSpray, shower spray, laminar spray
- swivel arm can be moved independently of the Movaflex hose
- lockable front shower spray, spray returns through pressing spray diverter and spray returns automatically through handle closing
- Select button for a comfortable switch from PowderSpray to the front spray
- MagFit magnetic shower support
- connection dimension: DN15
- maximum flow rate at 3 bar: 5,6 l/min
- ceramic cartridge
- connection type: G ⅜ hose connections
- temperature limitation adjustable
- integrated non-return valve
- suitable for continuous flow water heaters
- tap hole with Ø 35 mm required
- Movaflex hose is flexible swiveling (360°)
- high-quality textile hose with braiding
- yarns are made of recycled PET
- warm, cotton-like material feels great to the skin

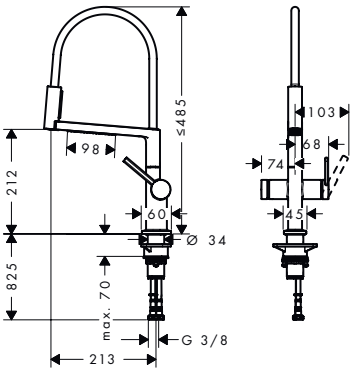

Sustainability

EcoSmart

Technologies

Quick Clean | Comfort Zone | Select

Spray types

Laminar Spray | Powder Spray | Shower Spray

Installation

Mag Fit | Mova Flex

Finish	Code no.
Chrome	72861000
Brushed Black Chrome	72861340
Matt Black	72861670
Stainless Steel Finish	72861800

Talis M54 Single lever kitchen mixers, pull-out spray, 2jet

Features of all variants

- ComfortZone 210
- swivel range adjustable in 4 steps 60°, 110°, 150° or 360°
- laminar spray, shower spray
- lockable shower spray, spray returns through pressing spray diverter and spray returns automatically through handle closing
- connection dimension: DN15
- ceramic cartridge
- connection type: G ⅜ hose connections
- temperature limitation adjustable
- integrated non-return valve
- suitable for continuous flow water heaters
- tap hole with Ø 35 mm required

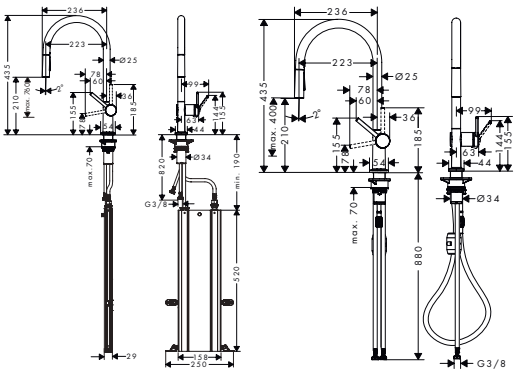

Sustainability

EcoSmart

Technologies

Quick Clean | Comfort Zone | Pull-out | sBox Kitchen

Spray types

Laminar Spray | Shower Spray

Certificates/declarations

EPD

For more information about this product, please see the next page.

Measurements within scale drawings are in mm.
Technical specifications and units of measure are subject to change.

Talis M54 Single lever kitchen mixers, pull-out spray, 2jet

Overview variants

ComfortZone	Hose retraction	Extension length (cm)	EcoSmart	Max. flow rate at 3 bar (l/min)	Finish	Code no.
210	sBox	up to 76 cm	–	7	Chrome	72801000
					Brushed Black Chrome	72801340
					Matt Black	72801670
					Stainless Steel Finish	72801800
210	weight	up to 50 cm	–	8	Chrome	72800000
					Brushed Black Chrome	72800340
					Matt Black	72800670
					Stainless Steel Finish	72800800
210	weight	up to 50 cm	■	5	Chrome	72842000
					Matt Black	72842670

Talis M54 Single lever kitchen mixers, pull-out spout, 1jet

Features of all variants

- ComfortZone 210
- swivel range adjustable in 4 steps 60°, 110°, 150° or 360°
- normal spray
- connection dimension: DN15
- maximum flow rate at 3 bar: 7 l/min
- ceramic cartridge
- connection type: G ⅜ hose connections
- temperature limitation adjustable
- integrated non-return valve
- suitable for continuous flow water heaters
- tap hole with Ø 35 mm required

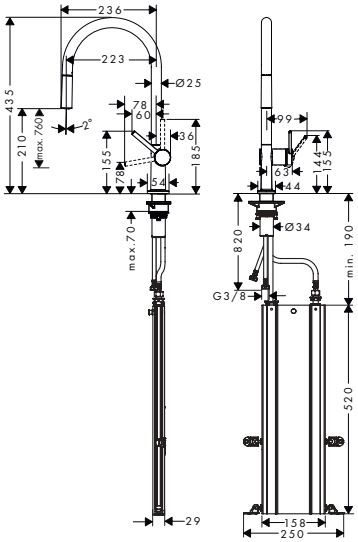

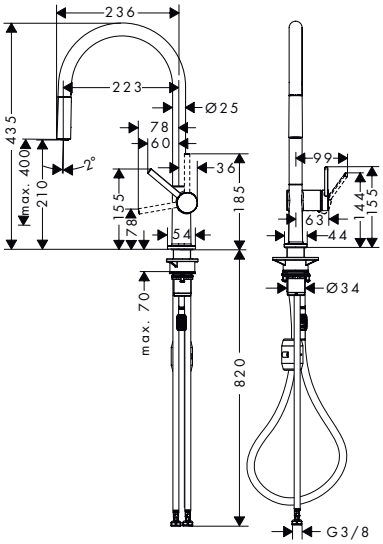

Technologies

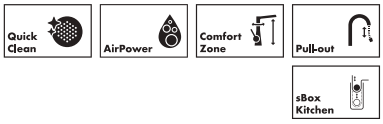

Spray types

Certificates/declarations

Overview variants

ComfortZone	Hose retraction	Extension length (cm)	Max. flow rate at 3 bar (l/min)	Finish	Code no.
210	sBox	up to 76 cm	7	Chrome	72803000
				Matt Black	72803670
				Stainless Steel Finish	72803800
210	weight	up to 50 cm	7	Chrome	72802000
				Matt Black	72802670
				Stainless Steel Finish	72802800

Measurements within scale drawings are in mm.
Technical specifications and units of measure are subject to change.

Talis M54 Single lever kitchen mixers, 1jet

Features of all variants

- ComfortZone 220
- swivel range adjustable in 4 steps 60°, 110°, 150° or 360°
- laminar spray
- connection dimension: DN15
- ceramic cartridge
- connection type: G ⅜ hose connections
- temperature limitation adjustable
- suitable for continuous flow water heaters
- tap hole with Ø 35 mm required

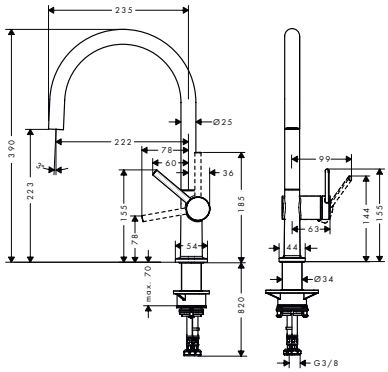

Sustainability

EcoSmart

Technologies

Quick Clean | Comfort Zone

Spray types

Laminar Spray

Certificates/declarations

EPD

Overview variants

ComfortZone	EcoSmart	Max. flow rate at 3 bar (l/min)	Finish	Code no.
220	–	9	Chrome	72804000
			Matt Black	72804670
			Stainless Steel Finish	72804800
220	■	5	Chrome	72843000
			Matt Black	72843670

Talis M54 Single lever kitchen mixer 220, device shut-off valve, 1jet

Features

- ComfortZone 220
- swivel range adjustable in 4 steps 60°, 110°, 150° or 360°
- laminar spray
- with integrated shut-off valve
- connection dimension: DN15
- maximum flow rate at 3 bar: 9 l/min
- ceramic cartridge
- connection type: G ⅜ hose connections
- temperature limitation adjustable
- suitable for continuous flow water heaters
- tap hole with Ø 35 mm required

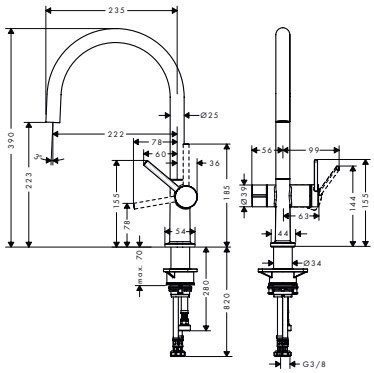

Technologies

Quick Clean | Comfort Zone

Spray types

Laminar Spray

Finish	Code no.
Chrome	72805000
Matt Black	72805670
Stainless Steel Finish	72805800

Measurements within scale drawings are in mm.
Technical specifications and units of measure are subject to change.

Talis M54 Single lever kitchen mixers, 1jet

Features of all variants

- ComfortZone 220
- swivel range adjustable in 4 steps 60°, 110°, 150° or 360°
- laminar spray
- connection dimension: DN15
- ceramic cartridge
- connection type: G ⅜ hose connections
- temperature limitation adjustable
- suitable for continuous flow water heaters
- tap hole with Ø 35 mm required

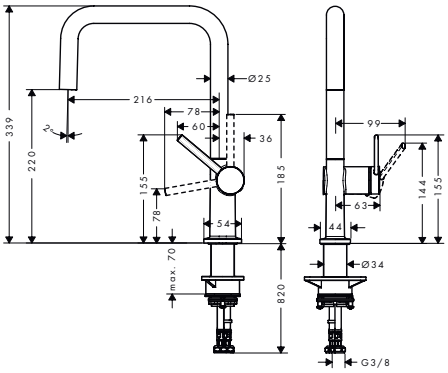

Sustainability

EcoSmart

Technologies

Quick Clean | Comfort Zone

Spray types

Laminar Spray

Certificates/declarations

EPD

Overview variants

ComfortZone	EcoSmart	Max. flow rate at 3 bar (l/min)	Finish	Code no.
220	–	9	Chrome	72806000
			Matt Black	72806670
			Stainless Steel Finish	72806800
220	■	5.7	Chrome	72844000
			Matt Black	72844670

Talis M54 Single lever kitchen mixer U 220, device shut-off valve, 1jet

Features

- ComfortZone 220
- swivel range adjustable in 4 steps 60°, 110°, 150° or 360°
- laminar spray
- with integrated shut-off valve
- device connection DN20
- connection dimension: DN15
- maximum flow rate at 3 bar: 8 l/min
- ceramic cartridge
- connection type: G ⅜ hose connections
- temperature limitation adjustable
- suitable for continuous flow water heaters
- tap hole with Ø 35 mm required

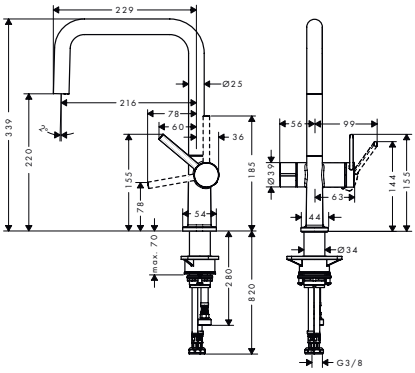

Technologies

Quick Clean | Comfort Zone

Spray types

Laminar Spray

Finish	Code no.
Chrome	72807000
Matt Black	72807670
Stainless Steel Finish	72807800

Measurements within scale drawings are in mm.
Technical specifications and units of measure are subject to change.

Talis M54 Single lever kitchen mixers, pull-out spout, 1jet

Features of all variants

- ComfortZone 270
- l-spout
- swivel range adjustable in 4 steps 60°, 110°, 150° or 360°
- laminar spray
- connection dimension: DN15
- ceramic cartridge
- connection type: G ⅜ hose connections
- temperature limitation adjustable
- integrated non-return valve
- suitable for continuous flow water heaters

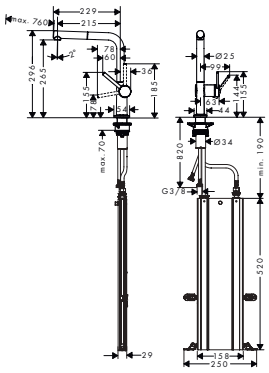

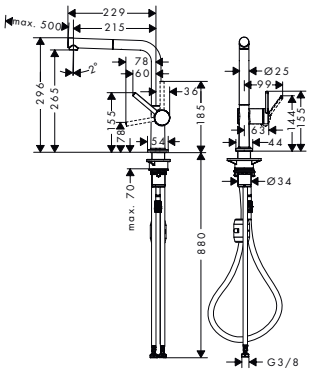

Sustainability

EcoSmart

Technologies

Quick Clean | Comfort Zone | Pull-out | sBox Kitchen

Spray types

Laminar Spray

Certificates/declarations

EPD

Overview variants

ComfortZone	Hose retraction	Extension length (cm)	EcoSmart	Max. flow rate at 3 bar (l/min)	Finish	Code no.
270	sBox	up to 76 cm	–	7	Chrome	72809000
					Brushed Black Chrome	72809340
					Matt Black	72809670
					Stainless Steel Finish	72809800
270	weight	up to 50 cm	–	8	Chrome	72808000
					Brushed Black Chrome	72808340
					Matt Black	72808670
					Stainless Steel Finish	72808800
270	weight	up to 50 cm	■	4.9	Chrome	72845000
					Matt Black	72845670

Measurements within scale drawings are in mm.
Technical specifications and units of measure are subject to change.

Talis M54 Single lever kitchen mixer 270, 1jet

Features

- ComfortZone 270
- l-spout
- swivel range adjustable in 4 steps 60°, 110°, 150° or 360°
- laminar spray
- connection dimension: DN15
- maximum flow rate at 3 bar: 8,4 l/min
- ceramic cartridge
- connection type: G ⅜ hose connections
- temperature limitation adjustable
- suitable for continuous flow water heaters
- tap hole with Ø 35 mm required

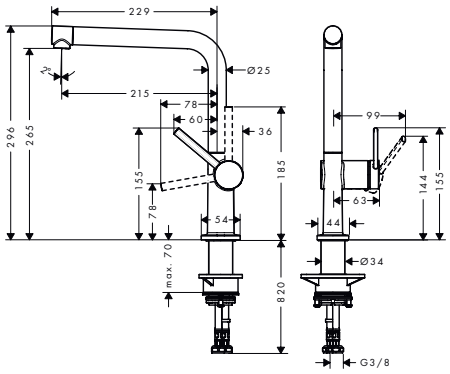

Technologies

Quick Clean | Comfort Zone

Spray types

Laminar Spray

Certificates/declarations

EPD

Finish	Code no.
Chrome	72840000
Brushed Black Chrome	72840340
Matt Black	72840670
Stainless Steel Finish	72840800

Talis M54 Single lever kitchen mixer 270, LowPressure/vented hot water cylinders, pull-out spout, 1jet

Features

- for vented hot water cylinders (no pressure)
- ComfortZone 270
- swivel range adjustable in 3 steps 60°, 110° or 150°
- laminar spray
- connection dimension: DN15
- ceramic cartridge
- connection type: G ⅜ hose connections
- temperature limitation adjustable
- integrated non-return valve
- not suitable for continuous flow water heaters
- extension length up to 50 cm
- tap hole with Ø 35 mm required

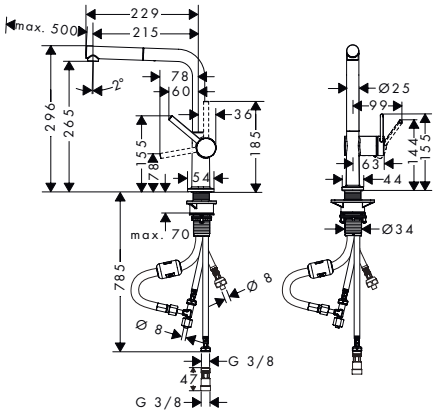

Technologies

Comfort Zone | Low Pressure | Pull-out

Spray types

Laminar Spray

Finish	Code no.
Chrome	72860000
Matt Black	72860670
Stainless Steel Finish	72860800

Measurements within scale drawings are in mm.
Technical specifications and units of measure are subject to change.

Talis M54 Single lever kitchen mixer 270, LowPressure/vented hot water cylinders, 1jet

Features

- for vented hot water cylinders (no pressure)
- ComfortZone 270
- l-spout
- swivel range adjustable in 4 steps 60°, 110°, 150° or 360°
- laminar spray
- connection dimension: DN15
- maximum flow rate at 3 bar: 5 l/min
- ceramic cartridge
- connection type: G ⅜ hose connections
- temperature limitation adjustable
- integrated non-return valve
- not suitable for continuous flow water heaters
- tap hole with Ø 35 mm required

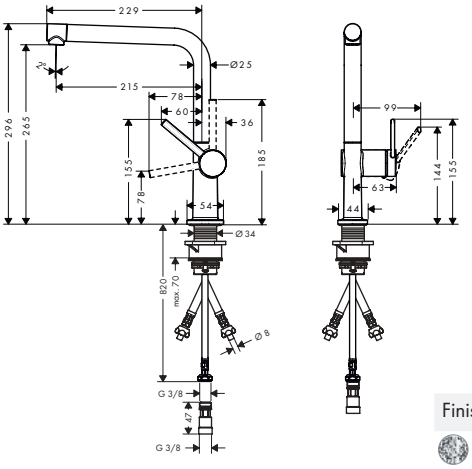

Technologies

Comfort Zone | Low Pressure

Spray types

Laminar Spray

Finish	Code no.
Chrome	72859000
Matt Black	72859670
Stainless Steel Finish	72859800

Talis M54 Single lever kitchen mixer 270, device shut-off valve, 1jet

Features

- ComfortZone 270
- swivel range adjustable in 4 steps 60°, 110°, 150° or 360°
- laminar spray
- with integrated shut-off valve
- connection dimension: DN15
- maximum flow rate at 3 bar: 8 l/min
- ceramic cartridge
- connection type: G ⅜ hose connections
- temperature limitation adjustable
- suitable for continuous flow water heaters
- tap hole with Ø 35 mm required

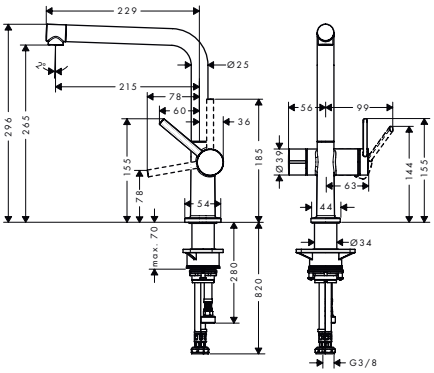

Technologies

Quick Clean | Comfort Zone

Spray types

Laminar Spray

Finish	Code no.
Chrome	72827000
Matt Black	72827670
Stainless Steel Finish	72827800

Measurements within scale drawings are in mm.
Technical specifications and units of measure are subject to change.

Cento Single lever kitchen mixer XXL, Semi-Pro, 2jet

Features

- ComfortZone 190
- swivel range 360°
- normal spray, shower spray
- lockable shower spray, spray returns through pressing spray diverter
- connection dimension: DN15
- maximum flow rate at 3 bar: 10 l/min
- ceramic cartridge with Eco handle position for a reduced flowrate by up to 50%
- connection type: G ⅜ hose connections
- temperature limitation adjustable
- integrated non-return valve
- suitable for continuous flow water heaters

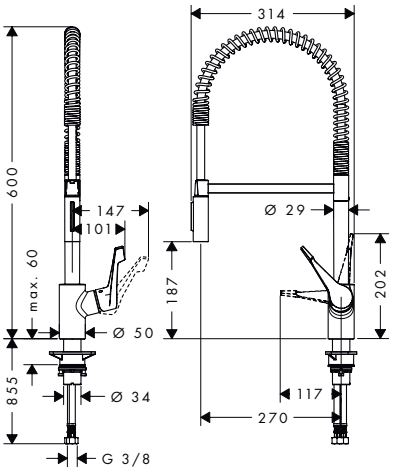

Sustainability

Eco Selection

Technologies

Quick Clean
Comfort Zone

Spray types

Normal Spray
Shower Spray

Certificates/declarations

EPD

Finish	Code no.
Chrome	14806000

Measurements within scale drawings are in mm.
Technical specifications and units of measure are subject to change.

Focus M41 Single lever kitchen mixers, pull-out spray, 2jet

Features of all variants

- ComfortZone 240
- swivel range adjustable in 2 steps to 110° or 150°
- laminar spray, shower spray
- MagFit magnetic shower support
- quick connect hose
- connection dimension: DN15
- ceramic cartridge
- connection type: G ⅜ hose connections
- temperature limitation adjustable
- integrated non-return valve
- suitable for continuous flow water heaters
- extension length up to 50 cm

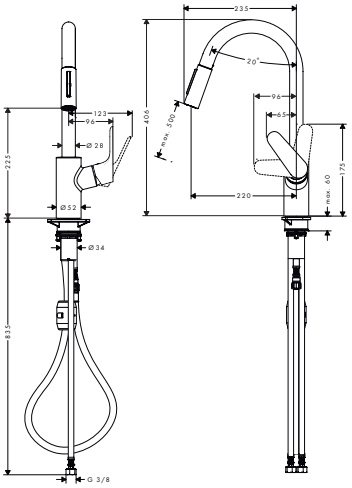

Sustainability

EcoSmart

Technologies

Quick Clean | Comfort Zone | Pull-out

Spray types

Laminar Spray | Shower Spray

Installation

Mag Fit

Certificates/declarations

EPD

Overview variants

ComfortZone	Hose retraction	Extension length (cm)	EcoSmart	Max. flow rate at 3 bar (l/min)	Finish	Code no.
240	weight	up to 50 cm	–	10	Chrome	31815000
					Matt Black	31815670
					Stainless Steel Finish	31815800
240	weight	up to 50 cm	■	5.8	Chrome	31833000

Focus M41 Single lever kitchen mixers, 1jet

Features of all variants

- ComfortZone 280
- swivel range adjustable in 3 steps 110°, 150° or 360°
- normal spray
- connection dimension: DN15
- ceramic cartridge
- connection type: G ⅜ hose connections
- temperature limitation adjustable
- suitable for continuous flow water heaters

280

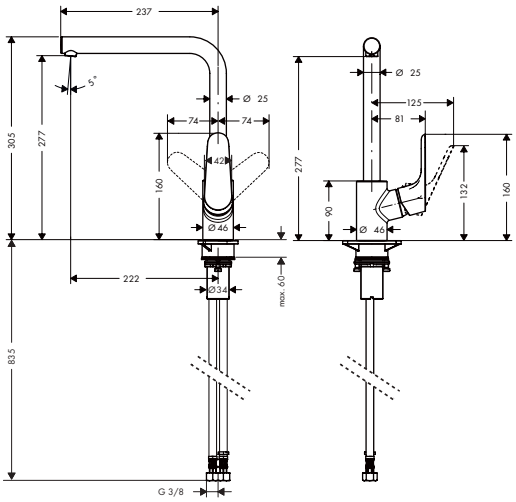

Sustainability

EcoSmart

Technologies

AirPower | Comfort Zone

Spray types

Normal Spray

Certificates/declarations

EPD

For more information about this product, please see the next page.

Measurements within scale drawings are in mm.
Technical specifications and units of measure are subject to change.

Focus M41 Single lever kitchen mixers, 1jet

Overview variants

ComfortZone	EcoSmart	Max. flow rate at 3 bar (l/min)	Finish	Code no.
280	–	12	Chrome	31817000
			Matt Black	31817670
			Stainless Steel Finish	31817800
280	■	4.7	Chrome	31827000

Focus M41 Single lever kitchen mixers, 1jet

Features of all variants

- ComfortZone 260
- swivel range adjustable in 3 steps 110°, 150° or 360°
- normal spray
- connection dimension: DN15
- ceramic cartridge
- connection type: G ⅜ hose connections
- temperature limitation adjustable
- suitable for continuous flow water heaters

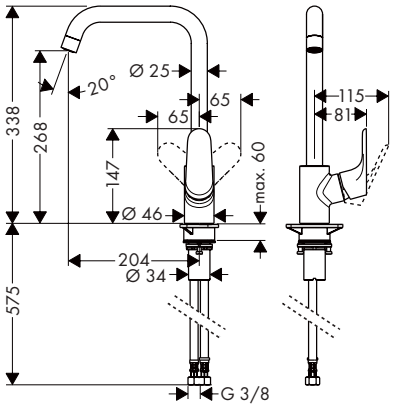

Sustainability

EcoSmart

Technologies

Quick Clean | AirPower | Comfort Zone

Spray types

Normal Spray

Certificates/declarations

EPD

Overview variants

ComfortZone	EcoSmart	Max. flow rate at 3 bar (l/min)	Finish	Code no.
260	–	12	Chrome	31820000
			Matt Black	31820670
			Stainless Steel Finish	31820800
260	■	4.6	Chrome	31821000
			Stainless Steel Finish	31821800

Measurements within scale drawings are in mm.
Technical specifications and units of measure are subject to change.

Focus M41 Single lever kitchen mixer 260, LowPressure/vented hot water cylinders, 1jet

Features

- for vented hot water cylinders (no pressure)
- ComfortZone 260
- swivel range adjustable in 3 steps 110°, 150° or 360°
- laminar spray
- connection dimension: DN15
- maximum flow rate at 3 bar: 5 l/min
- ceramic cartridge
- connection type: G ⅜ hose connections
- temperature limitation adjustable
- not suitable for continuous flow water heaters
- EU taxonomy: max. 6 l/min - Substantial Contribution (SC) possible

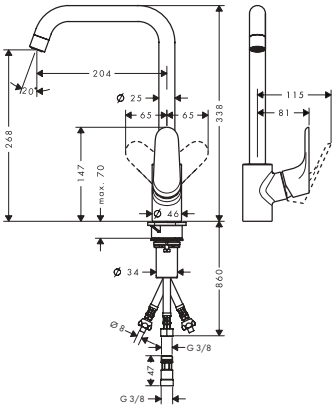

Technologies

AirPower | Comfort Zone | Low Pressure

Spray types

Laminar Spray

Certificates/declarations

EPD

Finish	Code no.
Chrome	31822000

Focus M41 Single lever kitchen mixer 260, device shut-off valve, 1jet

Features

- ComfortZone 260
- swivel range adjustable in 3 steps 110°, 150° or 360°
- normal spray
- with integrated shut-off valve
- connection dimension: DN15
- maximum flow rate at 3 bar: 12 l/min
- ceramic cartridge
- connection type: G ⅜ hose connections
- temperature limitation adjustable
- suitable for continuous flow water heaters

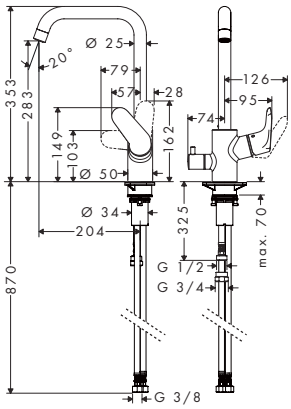

Technologies

Quick Clean | AirPower | Comfort Zone

Spray types

Normal Spray

Certificates/declarations

EPD

Finish	Code no.
Chrome	31823000

Focus M41 Single lever kitchen mixers, 1jet

Features of all variants

- ComfortZone 160
- swivel range 360°
- normal spray
- connection dimension: DN15
- ceramic cartridge
- connection type: G ⅜ hose connections
- temperature limitation adjustable
- suitable for continuous flow water heaters

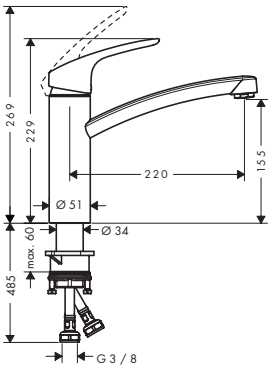

Sustainability

EcoSmart

Technologies

Quick Clean | AirPower | Comfort Zone

Spray types

Normal Spray

Certificates/declarations

EPD

Overview variants

ComfortZone	EcoSmart	Max. flow rate at 3 bar (l/min)	Finish	Code no.
160	–	12	Chrome	31806000
			Stainless Steel Finish	31806800
160	■	5	Chrome	31826000

Focus M41 Single lever kitchen mixer 160, CoolStart, EcoSelection, 1jet

Features

- ComfortZone 160
- cold water in basic handle position
- swivel range 360°
- connection dimension: DN15
- maximum flow rate at 3 bar: 13,8 l/min
- ceramic cartridge with Eco handle position for a reduced flowrate by up to 50%
- connection type: G ⅜ hose connections
- temperature limitation adjustable
- suitable for continuous flow water heaters

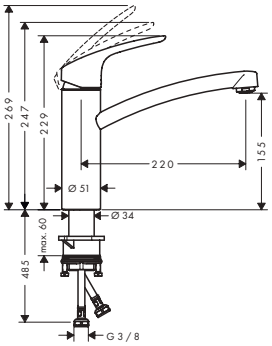

Sustainability

CoolStart | Eco Selection

Technologies

Quick Clean | AirPower | Comfort Zone

Certificates/declarations

EPD

Finish	Code no.
Chrome	31816000

Measurements within scale drawings are in mm.
Technical specifications and units of measure are subject to change.

Focus M41 Single lever kitchen mixer 160, LowPressure/vented hot water cylinders, 1jet

Features

- for vented hot water cylinders (no pressure)
- ComfortZone 160
- swivel range 150°
- laminar spray
- connection dimension: DN15
- maximum flow rate at 3 bar: 5 l/min
- ceramic cartridge
- connection type: G ⅜ hose connections
- temperature limitation adjustable
- not suitable for continuous flow water heaters
- EU taxonomy: max. 6 l/min - Substantial Contribution (SC) possible

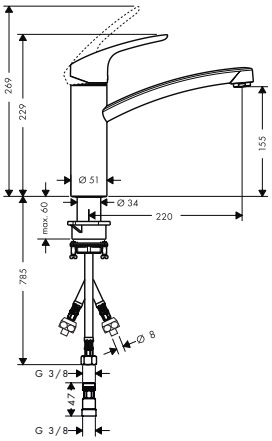

Technologies

Comfort Zone | Low Pressure

Spray types

Laminar Spray

Certificates/declarations

EPD

Finish	Code no.
Chrome	31804000

Focus M41 Single lever kitchen mixer 200, device shut-off valve, 1jet

Features

- ComfortZone 200
- swivel range 120°
- normal spray
- with integrated shut-off valve
- connection dimension: DN15
- maximum flow rate at 3 bar: 12 l/min
- ceramic cartridge
- connection type: G ⅜ hose connections
- temperature limitation adjustable
- suitable for continuous flow water heaters

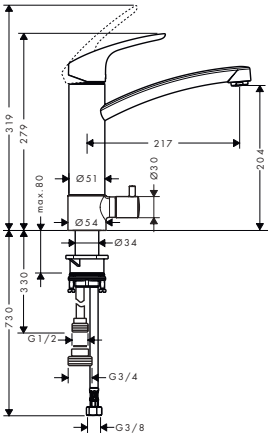

Technologies

Quick clean | AirPower | Comfort Zone

Spray types

Normal Spray

Certificates/declarations

EPD

Finish	Code no.
Chrome	31803000

Focus M41 Single lever kitchen mixer, wall-mounted lowspout, 1jet

Features

- swivel range 180°
- normal spray
- centre distance: 150 ± 12 mm
- connection dimension: DN15
- maximum flow rate at 3 bar: 12 l/min
- ceramic cartridge
- connection type: S-connections
- temperature limitation adjustable
- suitable for continuous flow water heaters

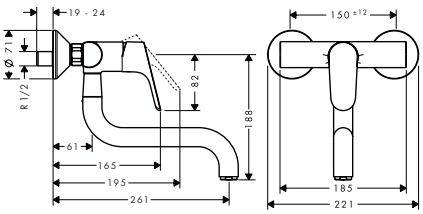

Technologies

Quick Clean | AirPower

Spray types

Normal Spray

Certificates/declarations

EPD

Finish	Code no.
Chrome	31825000

Focus M42 Single lever kitchen mixers, pull-out spray, 2jet

Features of all variants

- swivel range 360°
- laminar spray, shower spray
- lockable shower spray, spray returns through pressing spray diverter and spray returns automatically through handle closing
- MagFit magnetic shower support
- quick connect hose
- connection dimension: DN15
- maximum flow rate at 3 bar: 8 l/min
- ceramic cartridge
- connection type: G ⅜ hose connections
- temperature limitation adjustable
- integrated non-return valve
- suitable for continuous flow water heaters
- extension length up to 50 cm

180

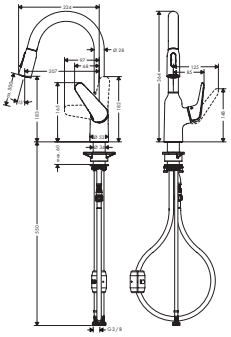

220

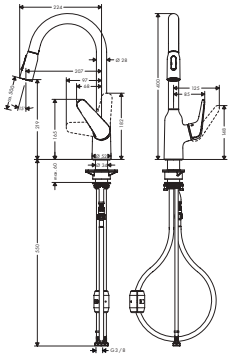

Technologies

Quick Clean | Comfort Zone | Pull-out

Spray types

Laminar Spray | Shower Spray

Installation

Mag Fit

Certificates/declarations

EPD

Overview variants

ComfortZone	Hose retraction	Extension length (cm)	Max. flow rate at 3 bar (l/min)	Finish	Code no.
180	weight	up to 50 cm	8	Chrome	71801000
				Stainless Steel Finish	71801800
220	weight	up to 50 cm	8	Chrome	71800000
				Stainless Steel Finish	71800800

Measurements within scale drawings are in mm.
Technical specifications and units of measure are subject to change.

Focus M42 Single lever kitchen mixer 220, 1jet

Features

- ComfortZone 220
- swivel range 360°
- normal spray
- connection dimension: DN15
- maximum flow rate at 3 bar: 10 l/min
- ceramic cartridge
- connection type: G ⅜ hose connections
- temperature limitation adjustable
- suitable for continuous flow water heaters

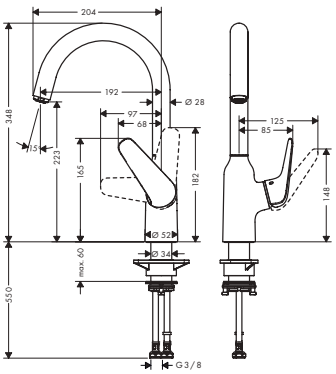

Technologies

Quick Clean | AirPower | Comfort Zone

Spray types

Normal Spray

Certificates/declarations

EPD

Finish	Code no.
Chrome	71802000
Stainless Steel Finish	71802800

Focus M42 Single lever kitchen mixer 220, device shut-off valve, 1jet

Features

- ComfortZone 220
- swivel range adjustable in 2 steps 110° or 360°
- normal spray
- with integrated shut-off valve
- connection dimension: DN15
- maximum flow rate at 3 bar: 10 l/min
- ceramic cartridge
- connection type: G ⅜ hose connections
- temperature limitation adjustable
- suitable for continuous flow water heaters

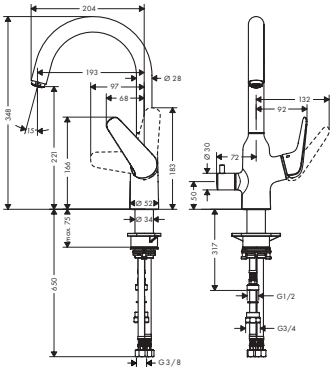

Technologies

Quick Clean | AirPower | Comfort Zone

Spray types

Normal Spray

Finish	Code no.
Chrome	71803000

Focus M42 Single lever kitchen mixers, CoolStart, 1jet

Features of all variants

- cold water in basic handle position
- swivel range 360°
- normal spray
- connection dimension: DN15
- maximum flow rate at 3 bar: 12 l/min
- ceramic cartridge with Eco handle position for a reduced flowrate by up to 50%
- connection type: G ⅜ hose connections
- temperature limitation adjustable
- suitable for continuous flow water heaters

100

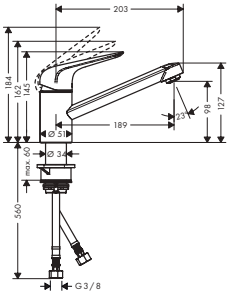

120

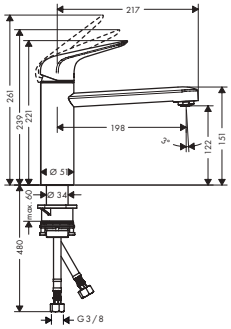

Sustainability

CoolStart, Eco Selection

Technologies

Quick Clean, AirPower, Comfort Zone

Spray types

Normal Spray

Certificates/declarations

EPD

Overview variants

	ComfortZone	Finish	Code no.
	100	Chrome	71809000
	120	Chrome	71805000

Focus M42 Single lever kitchen mixer, CoolStart, EcoSmart, 1jet

Features of all variants

- cold water in basic handle position
- swivel range 360°
- normal spray
- connection dimension: DN15
- maximum flow rate at 3 bar: 4,6 l/min
- ceramic cartridge
- connection type: G ⅜ hose connections
- temperature limitation adjustable
- suitable for continuous flow water heaters
- EU taxonomy: max. 6 l/min - Substantial Contribution (SC) possible

100

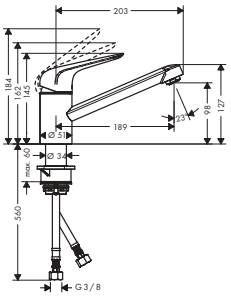

120

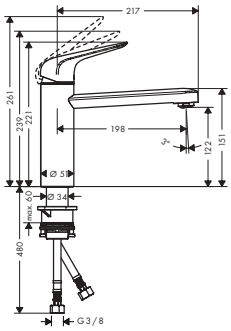

Sustainability

CoolStart, EcoSmart

Technologies

Quick Clean, AirPower, Comfort Zone

Spray types

Normal Spray

Overview variants

	ComfortZone	Finish	Code no.
	100	Chrome	71866000
	120	Chrome	71864000

Measurements within scale drawings are in mm.
Technical specifications and units of measure are subject to change.

Focus M42 Single lever kitchen mixers, pull-out spout, 1jet

Features of all variants

- ComfortZone 150
- swivel range 120°
- normal spray
- MagFit magnetic shower support
- connection dimension: DN15
- ceramic cartridge
- connection type: G ⅜ hose connections
- temperature limitation adjustable
- integrated non-return valve
- suitable for continuous flow water heaters
- extension length up to 50 cm

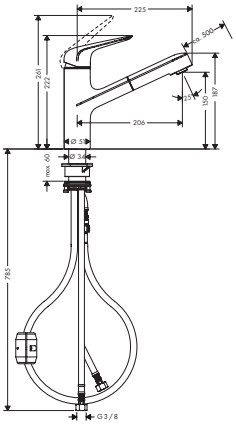

Sustainability

EcoSmart

Technologies

Quick Clean | AirPower | Comfort Zone | Pull-out

Spray types

Normal Spray

Installation

Mag Fit

Certificates/declarations

EPD

Overview variants

ComfortZone	Hose retraction	Extension length (cm)	EcoSmart	Max. flow rate at 3 bar (l/min)	Finish	Code no.
150	weight	up to 50 cm	–	8	Chrome	71814000
					Stainless Steel Finish	71814800
150	weight	up to 50 cm	■	4.9	Chrome	71865000

Measurements within scale drawings are in mm.
Technical specifications and units of measure are subject to change.

Zesis M33 Single lever kitchen mixers with metal pull-out spray

Features of all variants

- swivel range 150°
- laminar spray, shower spray
- lockable shower spray, spray returns through pressing spray diverter and spray returns automatically through handle closing
- connection dimension: DN15
- maximum flow rate at 3 bar: 8,2 l/min
- ceramic cartridge
- connection type: G ⅜ hose connections
- temperature limitation adjustable
- integrated non-return valve
- suitable for continuous flow water heaters
- metal pull-out spray

150

160

Technologies

Spray types

Installation

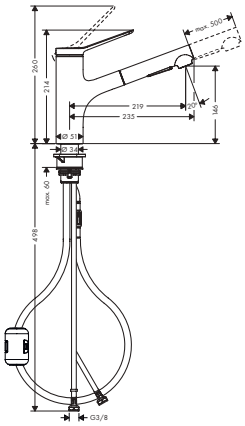

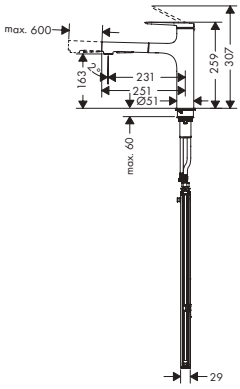

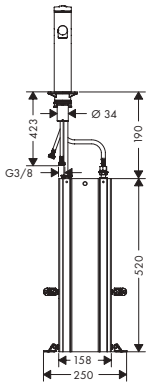

Overview variants

ComfortZone	Hose retraction	Extension length (cm)	Finish	Code no.
150	sBox	up to 76 cm	Chrome	74821000
			Matt Black	74821670
			Stainless Steel Finish	74821800
150	weight	up to 50 cm	Chrome	74820000
			Matt Black	74820670
			Stainless Steel Finish	74820800
160	sBox	up to 60 cm	Chrome	74823000
			Matt Black	74823670
			Stainless Steel Finish	74823800
160	weight	up to 50 cm	Chrome	74822000
			Matt Black	74822670
			Stainless Steel Finish	74822800

Measurements within scale drawings are in mm.
Technical specifications and units of measure are subject to change.

Zesis M33 Single lever kitchen mixers, pull-out spray, 2jet

Features of all variants

- swivel range 150°
- laminar spray, shower spray
- lockable shower spray, spray returns through pressing spray diverter and spray returns automatically through handle closing
- quick connect hose
- connection dimension: DN15
- ceramic cartridge
- connection type: G ⅜ hose connections
- temperature limitation adjustable
- integrated non-return valve
- suitable for continuous flow water heaters
- extension length up to 50 cm

150

160

Sustainability

EcoSmart

Technologies

Quick Clean | Comfort Zone | Pull-out | sBox lite

Spray types

Laminar Spray | Shower Spray

Installation

Mag Fit

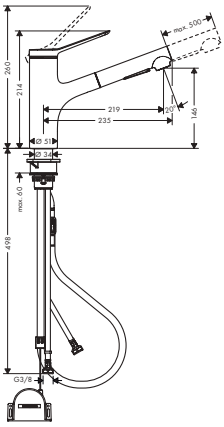

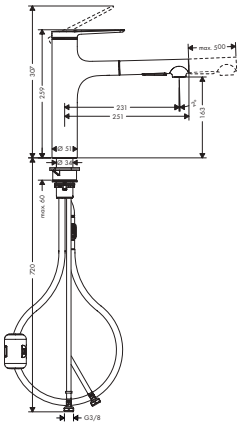

Overview variants

ComfortZone	Hose retraction	Extension length (cm)	EcoSmart	Max. flow rate at 3 bar (l/min)	Finish	Code no.
150	sBox lite	up to 50 cm	–	8.2	Chrome	74803000
					Matt Black	74803670
					Stainless Steel Finish	74803800
150	weight	up to 50 cm	–	8.2	Chrome	74800000
					Matt Black	74800670
					Stainless Steel Finish	74800800
150	weight	up to 50 cm	■	4.6	Chrome	74810000
160	sBox lite	up to 50 cm	–	8.2	Chrome	74804000
					Matt Black	74804670
					Stainless Steel Finish	74804800
160	weight	up to 50 cm	–	8.2	Chrome	74801000
					Matt Black	74801670
					Stainless Steel Finish	74801800

Measurements within scale drawings are in mm.
Technical specifications and units of measure are subject to change.

Zesis M33 Single lever kitchen mixers, 1jet

Features of all variants

- ComfortZone 150
- swivel range adjustable in 3 steps 60°, 110° or 360°
- normal spray
- connection dimension: DN15
- ceramic cartridge
- connection type: G ⅜ hose connections
- temperature limitation adjustable

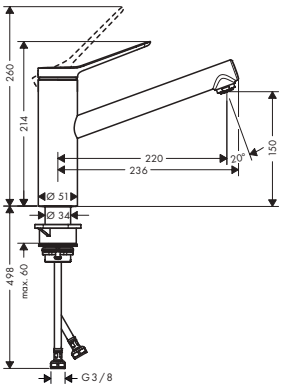

Sustainability

EcoSmart

Technologies

Quick Clean · AirPower · Comfort Zone

Spray types

Normal Spray

Overview variants

ComfortZone	EcoSmart	Max. flow rate at 3 bar (l/min)	Finish	Code no.
150	–	11.6	Chrome	74802000
			Matt Black	74802670
			Stainless Steel Finish	74802800
150	■	5	Chrome	74811000

Zesis M33 Single lever kitchen mixer 150, LowPressure/vented hot water cylinders, 1jet

Features

- for vented hot water cylinders (no pressure)
- ComfortZone 150
- swivel range adjustable in 3 steps 60°, 110° or 360°
- laminar spray
- connection dimension: DN15
- maximum flow rate at 3 bar: 4 l/min
- ceramic cartridge
- connection type: G ⅜ hose connections
- temperature limitation adjustable
- not suitable for continuous flow water heaters
- EU taxonomy: max. 6 l/min - Substantial Contribution (SC) possible

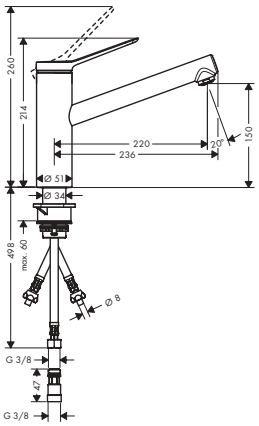

Technologies

Comfort Zone · Low Pressure

Spray types

Laminar Spray

Finish	Code no.
Chrome	74806000
Matt Black	74806670
Stainless Steel Finish	74806800

Measurements within scale drawings are in mm.
Technical specifications and units of measure are subject to change.

Zesis M33 Single lever kitchen mixer 150, CoolStart, EcoSelection, 1jet

Features

- ComfortZone 150
- cold water in basic handle position
- swivel range adjustable in 2 steps 60° or 110°
- normal spray
- connection dimension: DN15
- maximum flow rate at 3 bar: 7,6 l/min
- ceramic cartridge with Eco handle position for a reduced flowrate by up to 50%
- connection type: G ⅜ hose connections
- temperature limitation adjustable
- suitable for continuous flow water heaters

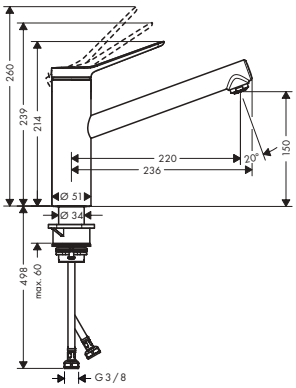

Sustainability

CoolStart | Eco Selection

Technologies

Quick Clean | AirPower | Comfort Zone

Spray types

Normal Spray

Finish	Code no.
Chrome	74813000
Matt Black	74813670
Stainless Steel Finish	74813800

Zesis M33 Single lever kitchen mixer 160, installation in front of a window, 1jet

Features

- ComfortZone 160
- swivel range 150°
- installation in front of the window, can be laid flat, base height 51 mm
- normal spray
- connection dimension: DN15
- maximum flow rate at 3 bar: 11,6 l/min
- ceramic cartridge
- connection type: G ⅜ hose connections
- suitable for continuous flow water heaters

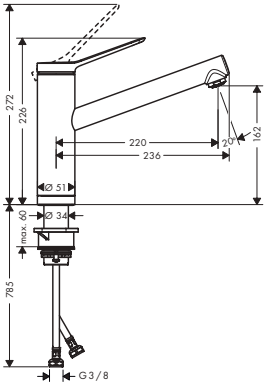

Technologies

Quick Clean | AirPower | Comfort Zone | Tilt Function

Spray types

Normal Spray

Finish	Code no.
Chrome	74805000

Measurements within scale drawings are in mm.
Technical specifications and units of measure are subject to change.

Zesis M33 Single lever kitchen mixer 200, device shut-off valve, 1jet

Features

- ComfortZone 200
- swivel range adjustable in 2 steps 60° or 110°
- normal spray
- with integrated shut-off valve
- connection dimension: DN15
- maximum flow rate at 3 bar: 11,4 l/min
- ceramic cartridge
- connection type: G ⅜ hose connections
- temperature limitation adjustable
- suitable for continuous flow water heaters

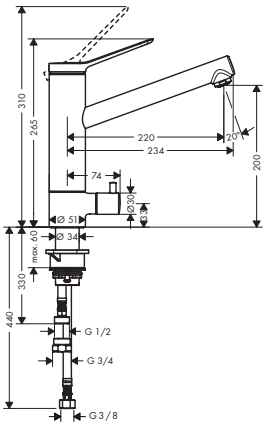

Technologies

Quick Clean | AirPower | Comfort Zone

Spray types

Normal Spray

Finish	Code no.
Chrome	74808000

Zesis M33 Single lever kitchen mixer 200, device shut-off valve, CoolStart, 1jet

Features

- ComfortZone 200
- cold water in basic handle position
- swivel range adjustable in 2 steps 60° or 110°
- normal spray
- with integrated shut-off valve
- connection dimension: DN15
- maximum flow rate at 3 bar: 11,4 l/min
- ceramic cartridge
- connection type: G ⅜ hose connections
- temperature limitation adjustable
- suitable for continuous flow water heaters

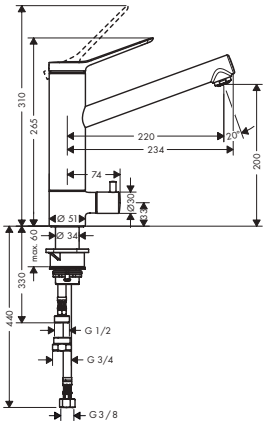

Sustainability

CoolStart | EcoSmart

Technologies

Quick Clean | AirPower | Comfort Zone

Spray types

Normal Spray

Finish	Code no.
Chrome	74807000

Measurements within scale drawings are in mm.
Technical specifications and units of measure are subject to change.

Logis M31 Single lever kitchen mixers, 1jet

Features of all variants

- ComfortZone 260
- swivel range adjustable in 3 steps 110°, 150° or 360°
- normal spray
- connection dimension: DN15
- ceramic cartridge
- connection type: G ⅜ hose connections
- temperature limitation adjustable
- suitable for continuous flow water heaters

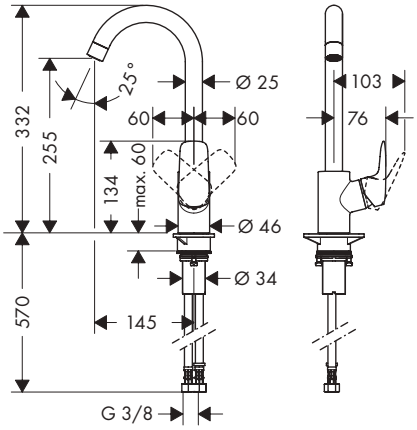

Sustainability

EcoSmart

Technologies

AirPower, Comfort Zone

Spray types

Normal Spray

Certificates/declarations

EPD

Overview variants

ComfortZone	EcoSmart	Max. flow rate at 3 bar (l/min)	Finish	Code no.
260	–	12	Chrome	71835000
260	■	4.7	Chrome	71861000

Logis M31 2-handle kitchen mixer 220, 1jet

Features

- ComfortZone 220
- swivel range adjustable in 3 steps 110°, 150° or 360°
- normal spray
- connection dimension: DN15
- maximum flow rate at 3 bar: 12 l/min
- ceramic valves hot/cold 90°
- connection type: G ⅜ hose connections
- suitable for continuous flow water heaters

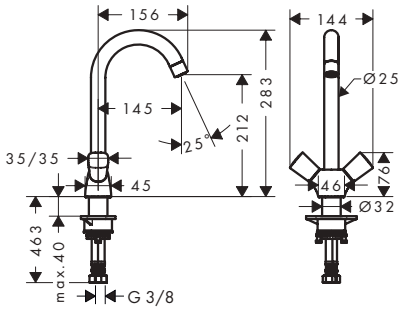

Technologies

AirPower, Comfort Zone

Spray types

Normal Spray

Certificates/declarations

EPD

Finish	Code no.
Chrome	71280000

Logis M31 Single lever kitchen mixers, 1jet

Features of all variants

- swivel range 360°
- normal spray
- connection dimension: DN15
- maximum flow rate at 3 bar: 12 l/min
- ceramic cartridge
- connection type: G ⅜ hose connections
- temperature limitation adjustable
- suitable for continuous flow water heaters

120

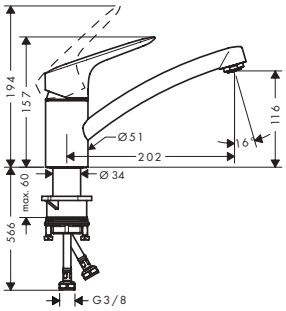

160

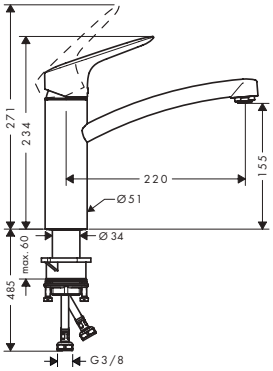

Technologies

AirPower | Comfort Zone

Spray types

Normal Spray

Certificates/declarations

EPD

Overview variants

ComfortZone	Max. flow rate at 3 bar (l/min)	Finish	Code no.
120	12	Chrome	71830000
160	12	Chrome	71832000

Logis M31 Single lever kitchen mixer 160, installation in front of a window, 1jet

Features

- ComfortZone 160
- swivel range 150°
- installation in front of the window, can be laid flat, base height 51 mm
- normal spray
- connection dimension: DN15
- maximum flow rate at 3 bar: 12 l/min
- ceramic cartridge
- connection type: G ⅜ hose connections
- temperature limitation adjustable
- suitable for continuous flow water heaters

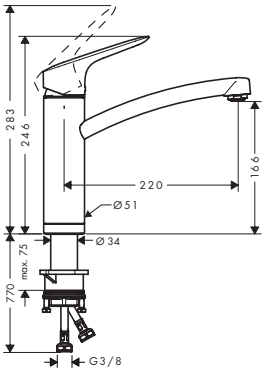

Technologies

AirPower | Comfort Zone | Tilt Function

Spray types

Normal Spray

Certificates/declarations

EPD

Finish	Code no.
Chrome	71833000

Measurements within scale drawings are in mm.
Technical specifications and units of measure are subject to change.

Logis M31 Single lever kitchen mixers, CoolStart, 1jet

Features of all variants

- cold water in basic handle position
- swivel range 360°
- normal spray
- connection dimension: DN15
- maximum flow rate at 3 bar: 12 l/min
- ceramic cartridge with Eco handle position for a reduced flowrate by up to 50%
- connection type: G ⅜ hose connections
- temperature limitation adjustable
- suitable for continuous flow water heaters

120

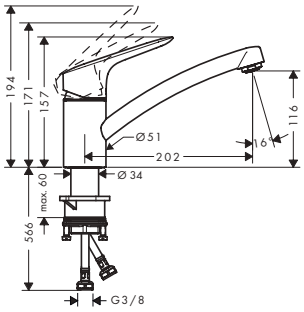

160

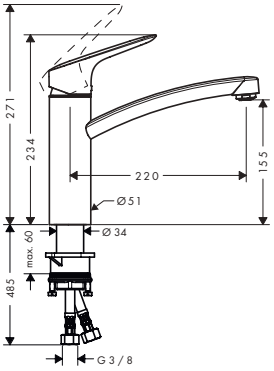

Sustainability

CoolStart | Eco Selection

Technologies

AirPower | Comfort Zone

Spray types

Normal Spray

Certificates/declarations

EPD

Overview variants

	ComfortZone	Finish	Code no.
	120	Chrome	71837000
	160	Chrome	71839000

Logis M31 Single lever kitchen mixer 120, LowPressure/vented hot water cylinders, 1jet

Features

- for vented hot water cylinders (no pressure)
- ComfortZone 120
- swivel range 360°
- normal spray
- connection dimension: DN15
- maximum flow rate at 3 bar: 5 l/min
- ceramic cartridge
- connection type: G ⅜ hose connections
- temperature limitation adjustable
- not suitable for continuous flow water heaters
- EU taxonomy: max. 6 l/min - Substantial Contribution (SC) possible

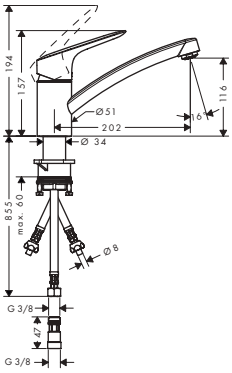

Technologies

Comfort Zone | Low Pressure

Spray types

Normal Spray

Certificates/declarations

EPD

Finish	Code no.
Chrome	71831000

Measurements within scale drawings are in mm.
Technical specifications and units of measure are subject to change.

Logis M31 Single lever kitchen mixer, wall-mounted lowspout, 1jet

Features

- swivel range 220°
- normal spray
- centre distance: 150 ± 12 mm
- connection dimension: DN15
- maximum flow rate at 3 bar: 13 l/min
- ceramic cartridge
- connection type: S-connections
- temperature limitation adjustable
- suitable for continuous flow water heaters

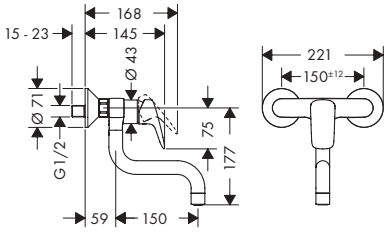

Technologies

AirPower

Spray types

Normal Spray

Certificates/declarations

EPD

Finish	Code no.
Chrome	71836000

Logis M32 2-handle kitchen mixer, wall-mounted, highspout, 1jet

Features

- swivel range 360°
- normal spray
- centre distance: 150 ± 12 mm
- connection dimension: DN15
- maximum flow rate at 3 bar: 15 l/min
- ceramic valves 90°
- connection type: S-connections
- temperature limitation adjustable
- suitable for continuous flow water heaters

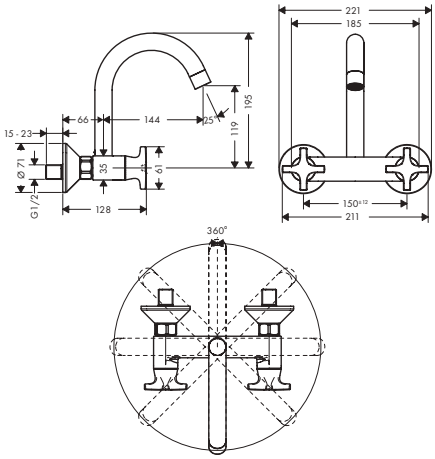

Technologies

AirPower

Spray types

Normal Spray

Finish	Code no.
Chrome	71286000

Measurements within scale drawings are in mm.
Technical specifications and units of measure are subject to change.

Vernis Blend M35 Single lever kitchen mixer 210 with swivel spout

Features

- ComfortZone 210
- swivel range adjustable in 2 steps 120° or 360°
- normal spray
- connection dimension: DN15
- maximum flow rate at 3 bar: 11,1 l/min
- ceramic cartridge
- connection type: G ⅜ hose connections
- suitable for continuous flow water heaters

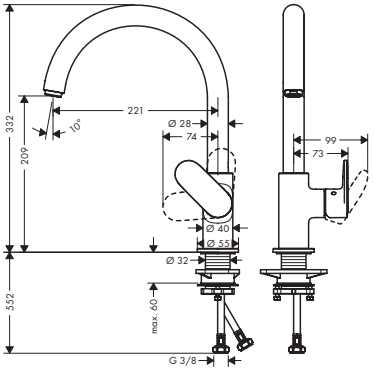

Technologies

AirPower | Comfort Zone

Spray types

Normal Spray

Finish	Code no.
Chrome	71870000
Matt Black	71870670

Vernis Shape M35 Single lever kitchen mixer 210 with swivel spout

Features

- handle can be positioned on the right or left
- ComfortZone 210
- swivel range adjustable in 2 steps 120° or 360°
- normal spray
- connection dimension: DN15
- maximum flow rate at 3 bar: 11,1 l/min
- ceramic cartridge
- connection type: G ⅜ hose connections
- suitable for continuous flow water heaters

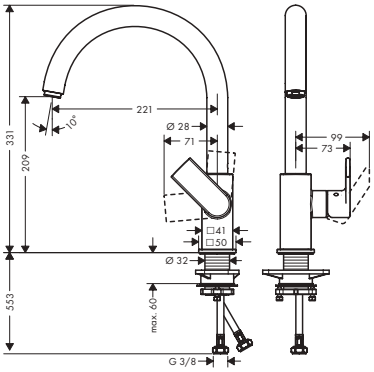

Technologies

AirPower | Comfort Zone

Spray types

Normal Spray

Finish	Code no.
Chrome	71871000
Matt Black	71871670

Measurements within scale drawings are in mm.
Technical specifications and units of measure are subject to change.

Filters

Features of all variants

- suitable for: SodaSystem, FilterSystem
- recommended life cycle: 12 months
- connection type: 60° twist and lock connection suitable for hansgrohe filterhead

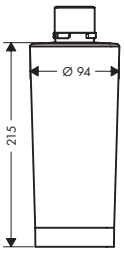

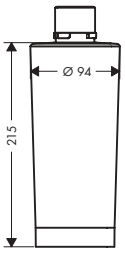

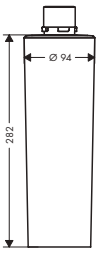

Overview variants

Filtertype	Code no.
activated carbon	76814000
ion exchanger	76815000
ion exchanger pro	76827000

Mineralisation and filters

Features of all variants

- suitable for: SodaSystem, FilterSystem
- usage: enriches water with minerals, reduces harmful substances, bad odours and improves the taste
- filter capacity: 300 l
- recommended life cycle: 6 months
- connection type: 60° twist and lock connection suitable for hansgrohe filterhead

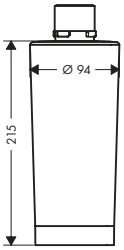

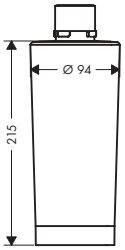

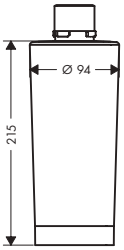

Overview variants

Filtertype	Code no.
Harmony	76828000
Life	76829000
Sport	76830000

F23 Flowmeter

Features

- connection dimension: G ⅜
- measures the flow and gives an acoustic signal for filter change
- wall-mounted or mounting on the filter head
- power supply: 2 Mignon AA batteries

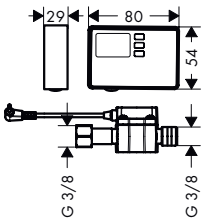

Code no.
76818000

Measurements within scale drawings are in mm.
Technical specifications and units of measure are subject to change.

A41 Soap-/ lotion dispenser

Features

- suitable for matched design to selected kichen mixers
- projection 91 mm
- material: metal
- non-corroding outlet pipe
- filling capacity 500 ml
- dosage 2 ml
- easy to fill up from the top
- for installation in worktops up to 55 mm
- easy and save installation without tools needed
- mounting hole with 28 - 35 mm diameter needed

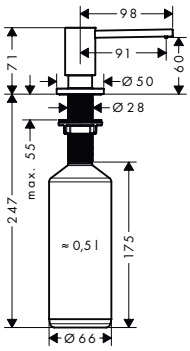

Finish	Code no.
Chrome	40438000
Brushed Black Chrome	40438340
Matt Black	40438670
Stainless Steel Finish	40438800

A51 Soap-/ lotion dispenser

Features

- suitable for matched design to selected kichen mixers
- projection 91 mm
- material: metal
- non-corroding outlet pipe
- filling capacity 500 ml
- dosage 2 ml
- easy to fill up from the top
- for installation in worktops up to 55 mm
- easy and save installation without tools needed
- mounting hole with 28 - 35 mm diameter needed

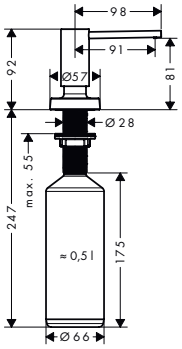

Finish	Code no.
Chrome	40448000
Matt Black	40448670
Stainless Steel Finish	40448800

A71 Soap-/ lotion dispenser

Features

- suitable for matched design to selected kichen mixers
- projection 91 mm
- material: metal
- non-corroding outlet pipe
- filling capacity 500 ml
- dosage 2 ml
- easy to fill up from the top
- for installation in worktops up to 55 mm
- easy and save installation without tools needed
- mounting hole with 28 - 35 mm diameter needed

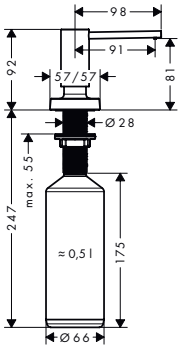

Finish	Code no.
Chrome	40468000
Matt Black	40468670
Stainless Steel Finish	40468800

Soap-/ lotion dispenser

Features

- type of soap: liquid soap
- filling capacity 300 ml
- contactless
- with mounting material

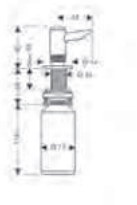

Finish	Code no.
Chrome	40418000
Stainless Steel Optic	40418800

Talis M54 F21- Shut-off valve for concealed installation

Features

- connection dimension: G ½ inclusive adapter G ¾
- clamping range: 0 - 60 mm
- diameter drill hole: 35 mm
- diameter: 48.0 mm
- device shut-off valve for installation in kitchen sinks and worktops

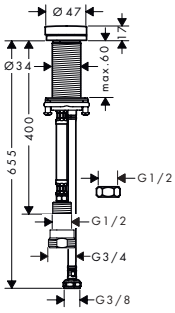

Finish	Code no.
Chrome	72841000
Matt Black	72841670
Stainless Steel Finish	72841800

Cutting boards

Features of all variants

- suitable for S51 SilicaTec sinks, S71 Stainless steel sinks

F16

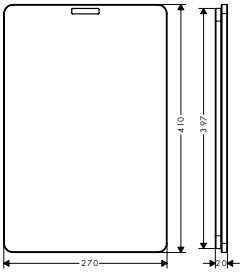

F15

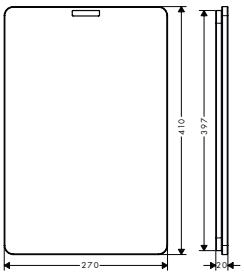

Overview variants

	Version	Finish	Code no.
	oak	Natural Oak	40961000
	walnut	Dark Walnut	40960000

Measurements within scale drawings are in mm.
Technical specifications and units of measure are subject to change.

F14 Multifunctional strainer

Features

- ideal to clean fruits and vegetables or to pour out noodles
- suitable for S51 SilicaTec sinks, S71 Stainless steel sinks, kitchen sinks with a depth of 400 mm to 406 mm
- material: plastic

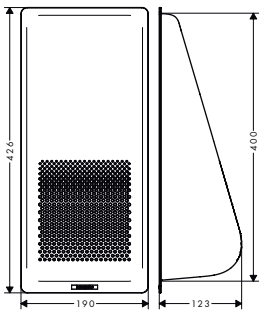

Finish	Code no.
Matt Black	40963000

Kitchen sinks

	S71				
Finish					
Cabinet size (cm)	60/80	80/90	60	50/60	60/80
Tap hole	■	■	■	–	–
Waste set	–	–	–	–	–
Top mounted	■	■	■	■	■
Flush mounted	■	■	■	■	■
Under mounted	–	–	–	■	■
from page	729	731	730	732	732

	S51
Finish	
Cabinet size (cm)	80/90
Tap hole	–
Waste set	–
Top mounted	–
Flush mounted	–
Under mounted	■
from page	736

■ available depending on the model
– not available

	S71	S51			
Finish					
Cabinet size (cm)	80/90	60/80	60	80/90	60/80
Tap hole	–	–	–	–	–
Waste set	–	–	–	–	–
Top mounted	■	■	■	■	–
Flush mounted	■	–	–	–	–
Under mounted	■	–	–	–	■
from page	733	733	734	735	735

Installation

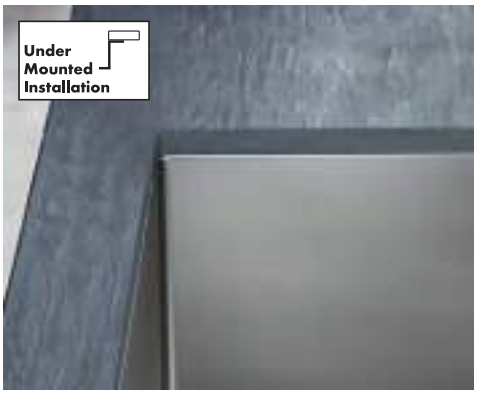

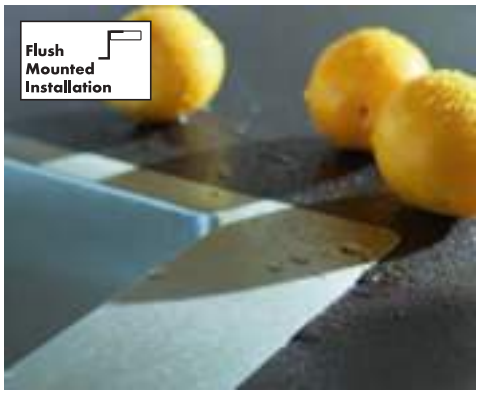

Top Mounted Installation

Top-mounted installation is the conventional type of installation and best for wooden or laminate worktops. The sink is inserted from above into a hole cut out of the worktop. This is easy to do and makes the flat edge of the sink look really great.

Under Mounted Installation

The undermount installation sinks the sink into the countertop and is attached to the countertop from below. This type of installation is only suitable for water-insensitive countertops made of natural stone, concrete or quartz.

Flush Mounted Installation

The sink is inserted flush with the countertop. The stepless transition creates additional work surface and simplifies cleaning, as there is no edge at the sink edge. This type of installation is best for countertops made of solid materials.

Finish

Concretegrey

-380

Graphite-
black

-170

Stainless
Steel

-800

Stonegrey

-290

S71 Built-in sinks Stainless Steel

Features of all variants

- material: stainless steel
- number of bowls: 1 main bowl
- predrilled tap hole
- installation type: flat on the countertop (self-rimming) or flush-mount installation
- position overflow: on the right side of the bowl
- tap ledge reinforcing for a tight and stable seating of the kitchen mixer
- corner radius: 10 mm
- sink depth: frame
- waste set not included - please order one waste set from the required parts

450

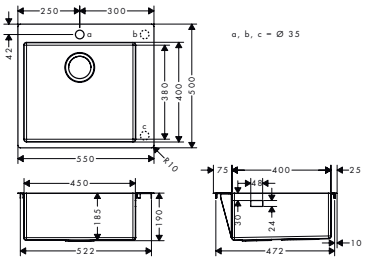

660

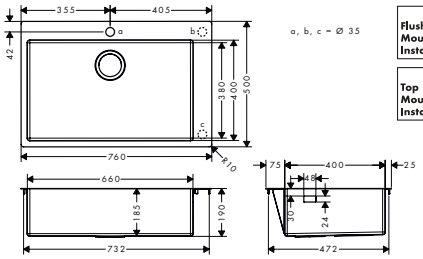

Installation

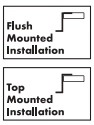

Overview variants

Cabinet size (cm)	Cut-out dimensions (mm)	Number of bowls	Finish	Code no.
60	530 x 480 mm	1	Stainless Steel	43301800
80	740 x 480 mm	1	Stainless Steel	43302800

Required parts:	Finish	Code no.
D14-10 Manual waste and overflow set for single bowl	Stainless Steel	43921800

S71 Built-in sinks Stainless Steel

Features of all variants

- material: stainless steel
- number of bowls: 1 main bowl
- tap hole and hole for pop-up waste control are pre-drilled
- installation type: flat on the countertop (self-rimming) or flush-mount installation
- position overflow: on the right side of the bowl
- tap ledge reinforcing for a tight and stable seating of the kitchen mixer
- corner radius: 10 mm
- sink depth: frame
- waste set not included - please order one waste set from the required parts

450

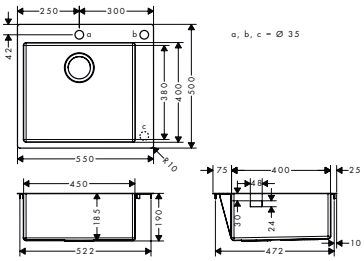

660

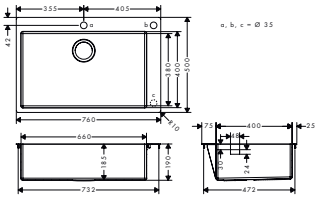

Installation

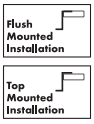

Overview variants

Cabinet size (cm)	Cut-out dimensions (mm)	Number of bowls	Finish	Code no.
60	530 x 480 mm	1	Stainless Steel	43305800
80	740 x 480 mm	1	Stainless Steel	43308800

Required parts:	Finish	Code no.
D14-11 Automatic waste and overflow set for single bowl	Stainless Steel	43931800

Measurements within scale drawings are in mm.
Technical specifications and units of measure are subject to change.

S71 Built-in sinks Stainless Steel with drainboard

Features of all variants

- cut-out dimensions: 1025 x 490 mm
- material: stainless steel
- number of bowls: 1 main bowl
- with drainage
- predrilled tap hole
- cabinet size: 60 cm
- installation type: flat on the countertop (self-rimming) or flush-mount installation
- tap ledge reinforcing for a tight and stable seating of the kitchen mixer
- for installation in worktops from 25 mm
- corner radius: 10 mm
- sink depth: frame
- waste set not included - please order one waste set from the required parts

450 drain board left

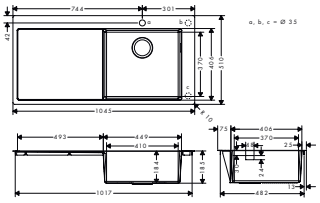

450 drain board right

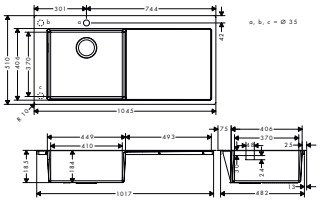

Installation

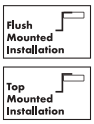

Overview variants

Cabinet size (cm)	Cut-out dimensions (mm)	Number of bowls	Drainboard	Finish	Code no.
60	1025 x 490 mm	1	left	Stainless Steel	43306800
60	1025 x 490 mm	1	right	Stainless Steel	43331800

Required parts:	Finish	Code no.
D14-10 Manual waste and overflow set for single bowl	Stainless Steel	43921800

S71 Built-in sinks Stainless Steel with drainboard

Features of all variants

- cut-out dimensions: 1025 x 490 mm
- material: stainless steel
- number of bowls: 1 main bowl
- with drainage
- tap hole and hole for pop-up waste control are pre-drilled
- cabinet size: 60 cm
- installation type: flat on the countertop (self-rimming) or flush-mount installation
- tap ledge reinforcing for a tight and stable seating of the kitchen mixer
- for installation in worktops from 25 mm
- corner radius: 10 mm
- sink depth: frame
- waste set not included - please order one waste set from the required parts

450 drain board left

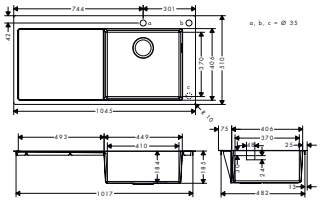

450 drain board right

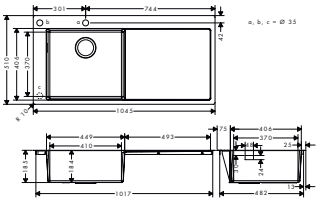

Installation

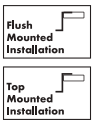

Overview variants

Cabinet size (cm)	Cut-out dimensions (mm)	Number of bowls	Drainboard	Finish	Code no.
60	1025 x 490 mm	1	left	Stainless Steel	43307800
60	1025 x 490 mm	1	right	Stainless Steel	43332800

Required parts:	Finish	Code no.
D14-11 Automatic waste and overflow set for single bowl	Stainless Steel	43931800

Measurements within scale drawings are in mm.
Technical specifications and units of measure are subject to change.

S71 Built-in sinks Stainless Steel

Features of all variants

- material: stainless steel
- predrilled tap hole
- installation type: flat on the countertop (self-rimming) or flush-mount installation
- tap ledge reinforcing for a tight and stable seating of the kitchen mixer
- corner radius: 10 mm
- sink depth: frame
- waste set not included - please order one waste set from the required parts

180/450

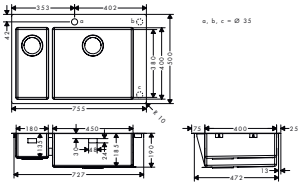

370/370

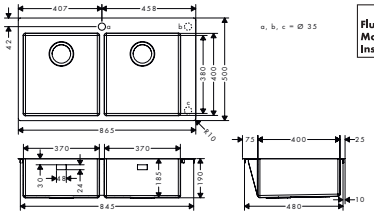

Installation

Overview variants

Cabinet size (cm)	Cut-out dimensions (mm)	Number of bowls	Finish	Code no.
80	735 x 480 mm	2	Stainless Steel	43309800
90	845 x 480 mm	2	Stainless Steel	43303800

Required parts:	Finish	Code no.
D15-10 Manual waste and overflow set for double bowl	Stainless Steel	43922800

S71 Built-in sinks Stainless Steel

Features of all variants

- material: stainless steel
- tap hole and hole for pop-up waste control are pre-drilled
- installation type: flat on the countertop (self-rimming) or flush-mount installation
- tap ledge reinforcing for a tight and stable seating of the kitchen mixer
- corner radius: 10 mm
- sink depth: frame
- waste set not included - please order one waste set from the required parts

180/450

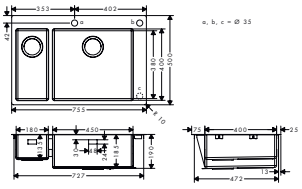

370/370

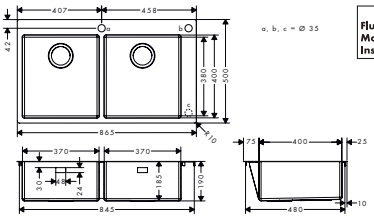

Installation

Overview variants

Cabinet size (cm)	Cut-out dimensions (mm)	Number of bowls	Finish	Code no.
80	735 x 480 mm	2	Stainless Steel	43310800
90	845 x 480 mm	2	Stainless Steel	43311800

Required parts:	Finish	Code no.
D15-11 Automatic waste and overflow set for double bowl	Stainless Steel	43932800

Measurements within scale drawings are in mm.
Technical specifications and units of measure are subject to change.

S71 Undermount sinks Stainless Steel

Features of all variants

- material: stainless steel
- number of bowls: 1 main bowl
- without tap hole
- installation type: undercounter, flat on the countertop (self-rimming) or flush-mount installation
- position overflow: on the right side of the bowl
- corner radius: 10 mm
- sink depth: frame
- waste set not included - please order one waste set from the required parts

400

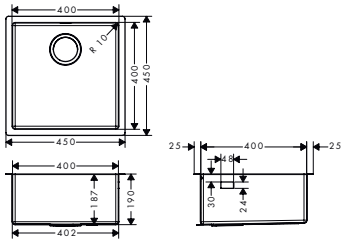

450

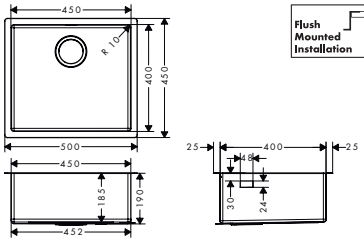

Installation

Overview variants

Cabinet size (cm)	Cut-out dimensions (mm)	Number of bowls	Finish	Code no.
50	398 x 398 mm	1	Stainless Steel	43425800
60	448 x 398 mm	1	Stainless Steel	43426800

Required parts (choose one):	Finish	Code no.
D14-10 Manual waste and overflow set for single bowl	Stainless Steel	43921800
D14-11 Automatic waste and overflow set for single bowl	Stainless Steel	43931800

S71 Undermount sinks Stainless Steel

Features of all variants

- material: stainless steel
- number of bowls: 1 main bowl
- without tap hole
- installation type: undercounter, flat on the countertop (self-rimming) or flush-mount installation
- position overflow: on the right side of the bowl
- corner radius: 10 mm
- sink depth: frame
- waste set not included - please order one waste set from the required parts

500

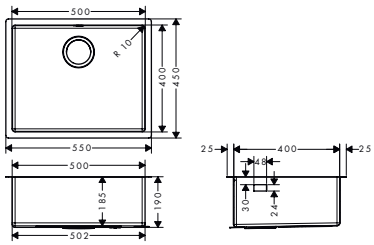

660

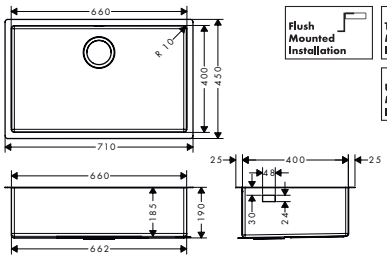

Installation

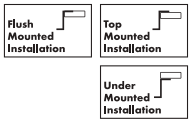

Overview variants

Cabinet size (cm)	Cut-out dimensions (mm)	Number of bowls	Finish	Code no.
60	498 x 398 mm	1	Stainless Steel	43427800
80	658 x 398 mm	1	Stainless Steel	43428800

Required parts (choose one):	Finish	Code no.
D14-10 Manual waste and overflow set for single bowl	Stainless Steel	43921800

Measurements within scale drawings are in mm.
Technical specifications and units of measure are subject to change.

S71 Undermount sinks Stainless Steel

Required parts (choose one):	Finish	Code no.
D14-11 Automatic waste and overflow set for single bowl	Stainless Steel	43931800

S71 Undermount sinks Stainless Steel

Features of all variants

- material: stainless steel
- without tap hole
- installation type: undercounter, flat on the countertop (self-rimming) or flush-mount installation
- corner radius: 10 mm
- sink depth: frame
- waste set not included - please order one waste set from the required parts

180/450

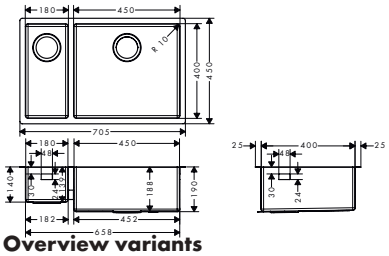

370/370

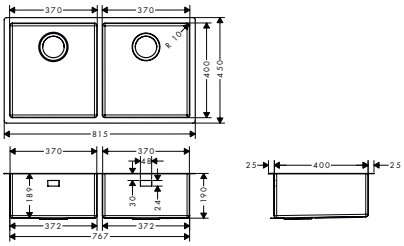

Installation

Overview variants

Cabinet size (cm)	Cut-out dimensions (mm)	Number of bowls	Finish	Code no.
80	653 x 398 mm	2	Stainless Steel	43429800
90	763 x 398 mm	2	Stainless Steel	43430800

Required parts (choose one):	Finish	Code no.
D15-10 Manual waste and overflow set for double bowl	Stainless Steel	43922800
D15-11 Automatic waste and overflow set for double bowl	Stainless Steel	43932800

S51 Built-in sinks SilicaTec

Features of all variants

- material: SilicaTec
- number of bowls: 1 main bowl
- tap hole for drilling is predefined (see scale drawing), diamond drill included
- installation type: topmount
- position overflow: on the right side of the bowl
- sink depth: frame
- waste set not included - please order one waste set from the required parts
- sink wall thickness: 7 mm
- diameter drain hole: 90 mm

450

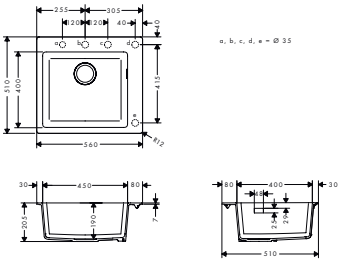

660

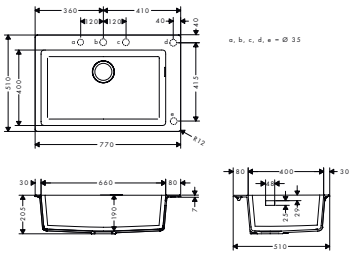

Installation

For more information about this product, please see the next page.

Measurements within scale drawings are in mm.
Technical specifications and units of measure are subject to change.

S51 Built-in sinks SilicaTec

Overview variants

Cabinet size (cm)	Cut-out dimensions (mm)	Number of bowls	Finish	Code no.
60	540 x 490 mm	1	Graphiteblack	43312170
			Stonegrey	43312290
			Concretegrey	43312380
80	750 x 490 mm	1	Graphiteblack	43313170
			Stonegrey	43313290
			Concretegrey	43313380

Required parts (choose one):	Finish	Code no.
D16-10 Manual waste and overflow set for single bowl granite	Chrome	43927000
D16-11 Automatic waste and overflow set for single bowl granite	Chrome	43937000

S51 Built-in sinks SilicaTec with drainboard

Features of all variants

- cut-out dimensions: 1030 x 490 mm
- material: SilicaTec
- number of bowls: 1 main bowl
- with drainage
- tap hole for drilling is predefined (see scale drawing), diamond drill included
- cabinet size: 60 cm
- installation type: topmount
- for installation in worktops from 25 mm
- sink depth: frame
- waste set not included - please order one waste set from the required parts

450 drain board left

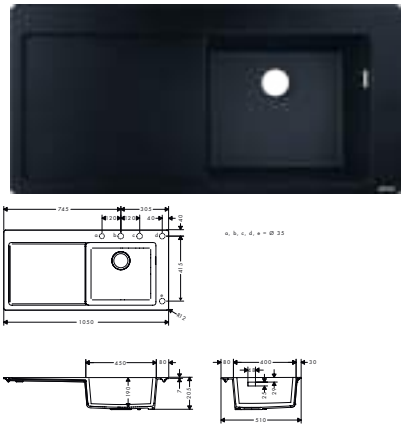

450 drain board right

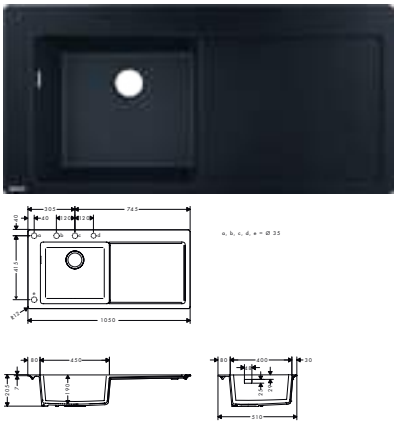

Installation

Overview variants

Cabinet size (cm)	Cut-out dimensions (mm)	Number of bowls	Drainboard	Finish	Code no.
60	1030 x 490 mm	1	left	Graphiteblack	43314170
				Stonegrey	43314290
				Concretegrey	43314380
60	1030 x 490 mm	1	right	Graphiteblack	43330170
				Stonegrey	43330290
				Concretegrey	43330380

Required parts (choose one):	Finish	Code no.
D16-10 Manual waste and overflow set for single bowl granite	Chrome	43927000
D16-11 Automatic waste and overflow set for single bowl granite	Chrome	43937000

Measurements within scale drawings are in mm.
Technical specifications and units of measure are subject to change.

S51 Built-in sinks SilicaTec

Features of all variants

- material: SilicaTec
- tap hole for drilling is predefined (see scale drawing), diamond drill included
- installation type: topmount
- position overflow: on the right side of the main bowl
- sink depth: frame
- waste set not included - please order one waste set from the required parts

180/450

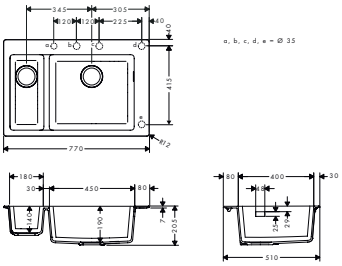

370/370

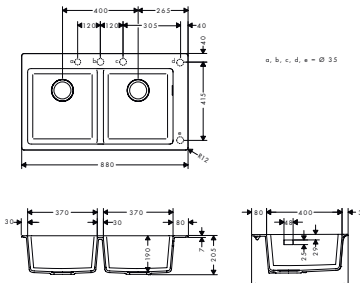

Installation

Overview variants

Cabinet size (cm)	Cut-out dimensions (mm)	Number of bowls	Finish	Code no.
80	750 x 490 mm	2	Graphiteblack	43315170
			Stonegrey	43315290
			Concretegrey	43315380
90	860 x 490 mm	2	Graphiteblack	43316170
			Stonegrey	43316290
			Concretegrey	43316380

Required parts (choose one):	Finish	Code no.
D17-10 Manual waste and overflow set for double bowl granite	Chrome	43928000
D17-11 Automatic waste and overflow set for double bowl granite	Chrome	43938000

S51 Undermount sinks SilicaTec

Features of all variants

- material: SilicaTec
- number of bowls: 1 main bowl
- without tap hole
- installation type: undercounter
- position overflow: on the right side of the bowl
- sink depth: frame
- waste set not included - please order one waste set from the required parts
- sink wall thickness: 7 mm
- diameter drain hole: 90 mm

450

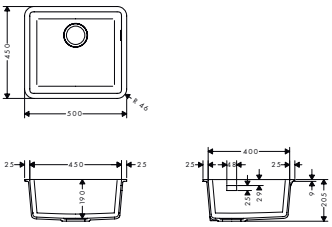

660

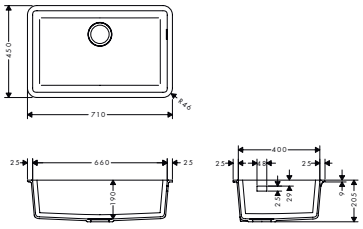

Installation

Overview variants

Cabinet size (cm)	Cut-out dimensions (mm)	Number of bowls	Finish	Code no.
60	448 x 398 mm	1	Graphiteblack	43431170
			Stonegrey	43431290
			Concretegrey	43431380

For more information about this product, please see the next page.

Measurements within scale drawings are in mm.
Technical specifications and units of measure are subject to change.

S51 Undermount sinks SilicaTec

Overview variants

Cabinet size (cm)	Cut-out dimensions (mm)	Number of bowls	Finish	Code no.
80	658 x 398 mm	1	Graphiteblack	43432170
			Stonegrey	43432290
			Concretegrey	43432380

Required parts (choose one):	Finish	Code no.
D16-10 Manual waste and overflow set for single bowl granite	Chrome	43927000
D16-11 Automatic waste and overflow set for single bowl granite	Chrome	43937000

S51 Undermount sinks SilicaTec

Features of all variants

- material: SilicaTec
- without tap hole
- installation type: undercounter
- sink depth: frame
- waste set not included - please order one waste set from the required parts

180/450

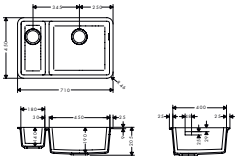

370/370

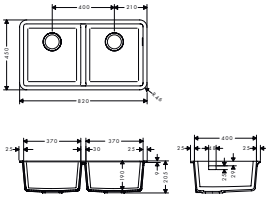

Installation

Overview variants

Cabinet size (cm)	Cut-out dimensions (mm)	Number of bowls	Finish	Code no.
80	658 x 398 mm	2	Graphiteblack	43433170
			Stonegrey	43433290
			Concretegrey	43433380
90	768 x 398 mm	2	Graphiteblack	43434170
			Stonegrey	43434290
			Concretegrey	43434380

Required parts (choose one):	Finish	Code no.
D17-10 Manual waste and overflow set for double bowl granite	Chrome	43928000
D17-11 Automatic waste and overflow set for double bowl granite	Chrome	43938000

Measurements within scale drawings are in mm.
Technical specifications and units of measure are subject to change.

Manual waste and overflow sets for single bowl

Features of all variants

- consists of: waste and overflow set, screen basket, trap
- drain system: drain operation via pushing/pulling screen basket
- diameter 40 / 50
- 1 1/2" with space-saving drain pipe and odor trap
- screen basket: 3 1/2"

D14-10

D16-10

Overview variants

Version	Finish	Code no.
for stainless steel sinks	Stainless Steel	43921800
for granite sinks	Chrome	43927000

Manual waste and overflow sets for double bowls

Features of all variants

- consists of: waste and overflow set, screen basket, trap
- drain system: drain operation of main bowl and additional bowl via pushing/pulling screen basket
- diameter 40 / 50
- 1 1/2" with space-saving drain pipe and odor trap
- screen basket: 3 1/2"

D15-10

D17-10

Overview variants

Version	Finish	Code no.
for stainless steel sinks	Stainless Steel	43922800
for granite sinks	Chrome	43928000

Automatic waste and overflow sets for single bowls

Features of all variants

- consists of: waste and overflow set, pop-up waste set, trap
- drain system: drain operation via turning pop-up handle
- diameter 40 / 50
- 1 1/2" with space-saving drain pipe and odor trap
- screen basket: 3 1/2"

D14-11

D16-11

Overview variants

	Version	Finish	Code no.
	for stainless steel sinks	Stainless Steel	43931800
	for granite sinks	Chrome	43937000

Optional parts:		Finish	Code no.
	A11 turning handle for eccentric operation	Matt Black	40953670
		Stainless Steel Finish	40953800

Automatic waste and overflow sets for double bowl

Features of all variants

- consists of: waste and overflow set, pop-up waste set, trap
- drain system: drain operation of main bowl via turning pop-up handle and additional bowl via pushing/pulling screen basket
- diameter 40 / 50
- 1 1/2" with space-saving drain pipe and odor trap
- screen basket: 3 1/2"

D15-11

D17-11

Overview variants

	Version	Finish	Code no.
	for stainless steel sinks	Stainless Steel	43932800
	for granite sinks	Chrome	43938000

Optional parts:		Finish	Code no.
	A11 turning handle for eccentric operation	Matt Black	40953670
		Stainless Steel Finish	40953800

Measurements within scale drawings are in mm.
Technical specifications and units of measure are subject to change.

A10 drain cover

Features

- suitable for stainless steel sinks with 3 ½" basket strainer
- material: plastic

Finish	Code no.
Stainless Steel Finish	40952800

A11 turning handle for eccentric operation

Features

- material: metal

Finish	Code no.
Matt Black	40953670
Stainless Steel Finish	40953800

F12 compensating element for sBox

Features

- for height compensation of the sBox up to 100 mm

	Code no.
	43333000

Planning & Installation

Exposed installation 1 function

Ⓐ **Pulsify Select S**
Shower set 105 3jet Relaxation
EcoSmart with shower bar 90 cm
24171, -000

Ⓑ **ShowerTablet Select**
Shower thermostat 400
for exposed installation
24360, -000

Ⓒ **RainDrain Flex**
Finish set shower drain 700 cuttable
56043, -000

Base set for finish sets for standard installation (not shown)
01001180

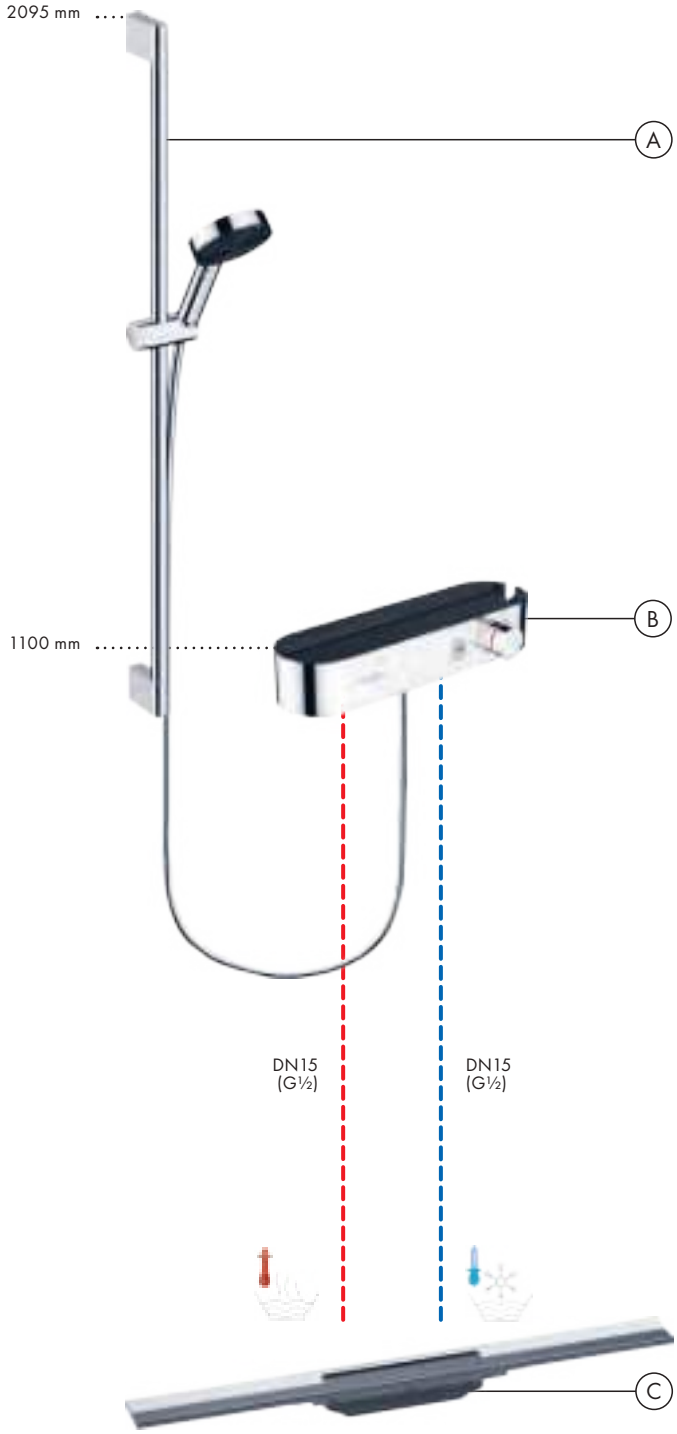

Concealed installation 1 function

Ⓐ **Raindance Select S**
Shower set 120 3jet
with shower bar 90 cm
and soap dish
26631, -000

Ⓑ **ShowerSelect Comfort Q**
Thermostat for concealed installation
for 1 function
15581, -000

Basic set iBox universal 2
(not shown)
01500180

Ⓒ **FixFit**
Wall outlet Square
with non-return valve
26455, -000

Ⓓ **Staro**
Complete set waste set 90
60056, -000

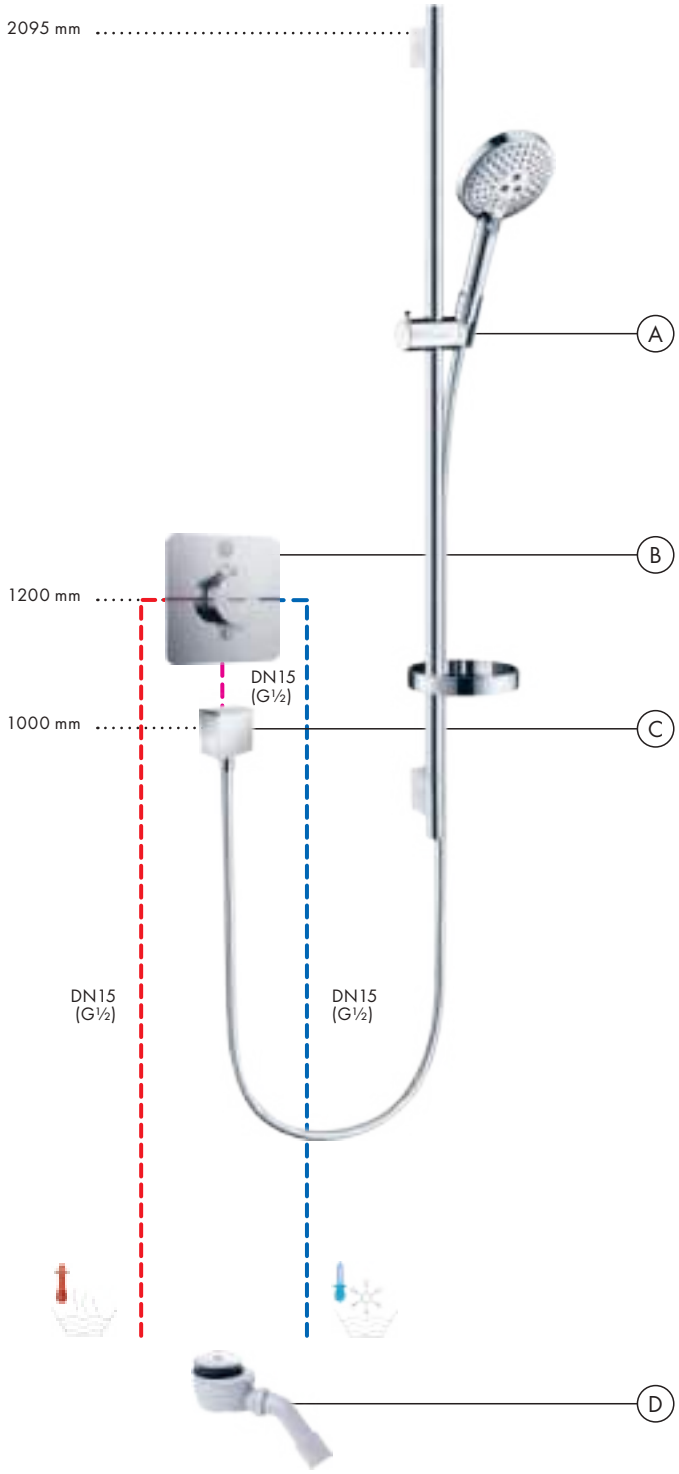

Concealed installation 2 functions

Ⓐ **Raindance S**
Overhead shower 240 1jet
PowderRain with shower arm
27607, -000

Ⓑ **Raindance Select S**
Shower set 120 3jet
with shower bar 110 cm right
26326, -000

Ⓒ **DuoTurn S**
Mixer for concealed installation
for 2 functions
75418, -000

Basic set iBox universal 2
(not shown)
01500180

Ⓓ **FixFit**
Wall outlet S with non-return valve
and synthetic connection angle
26453, -000

Ⓔ **Unica**
Foot support Comfort
26329, -000

Ⓕ **Raindrain**
Complete set waste set 90 XXL
60067, -000

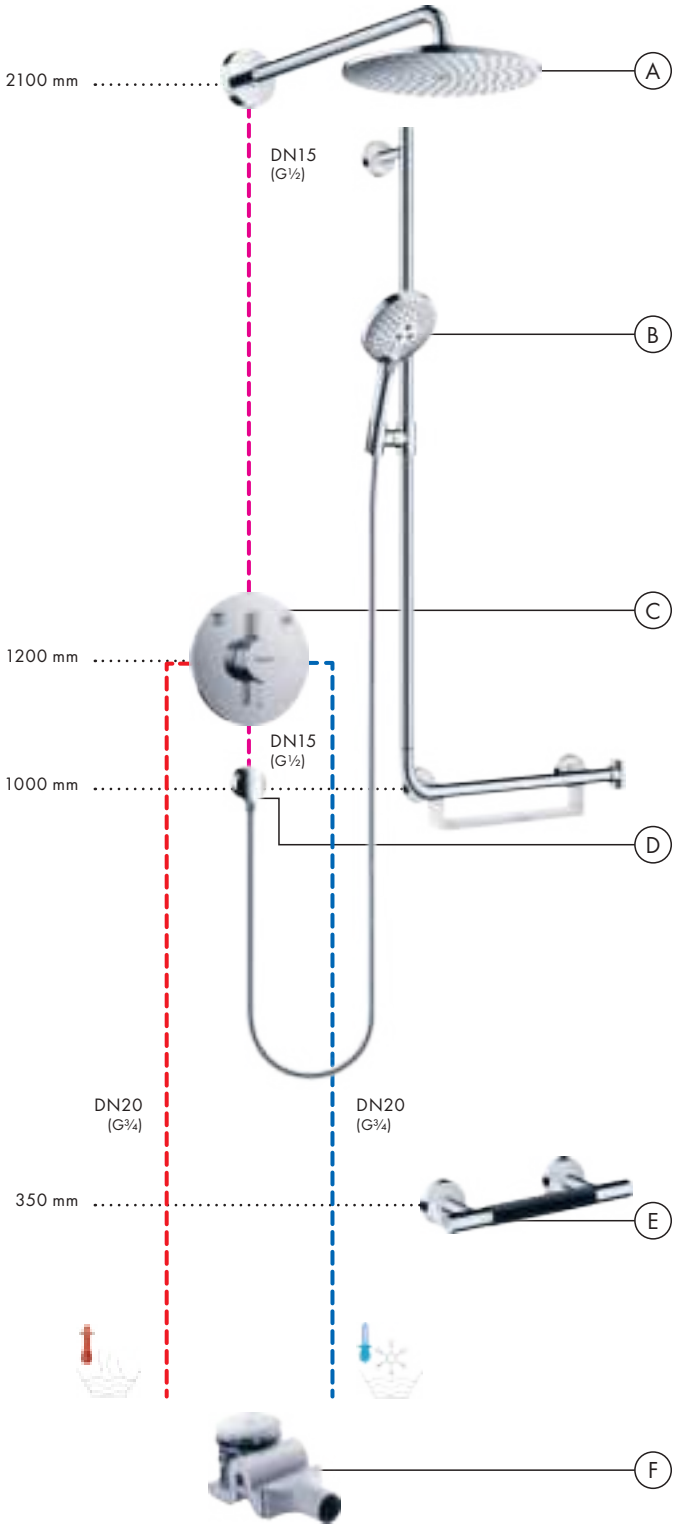

Concealed installation 2 functions

Ⓐ **Rainfinity**
Overhead shower 360 1jet
with wall connector
26230, -000

Ⓑ **Rainfinity**
Shower holder set 100 1jet
with shower hose 160 cm
26856, -000

Ⓒ **ShowerSelect Comfort E**
Thermostat for concealed installation
for 2 functions
15572, -000

Basic set iBox universal 2
(not shown)
01500180

Ⓓ **FixFit**
Wall outlet Square
with non-return valve
26455, -000

Ⓔ **RainDrain Flex**
Finish set shower drain 700 cuttable
56043, -000

Base set for finish sets for standard
installation (not shown)
01001180

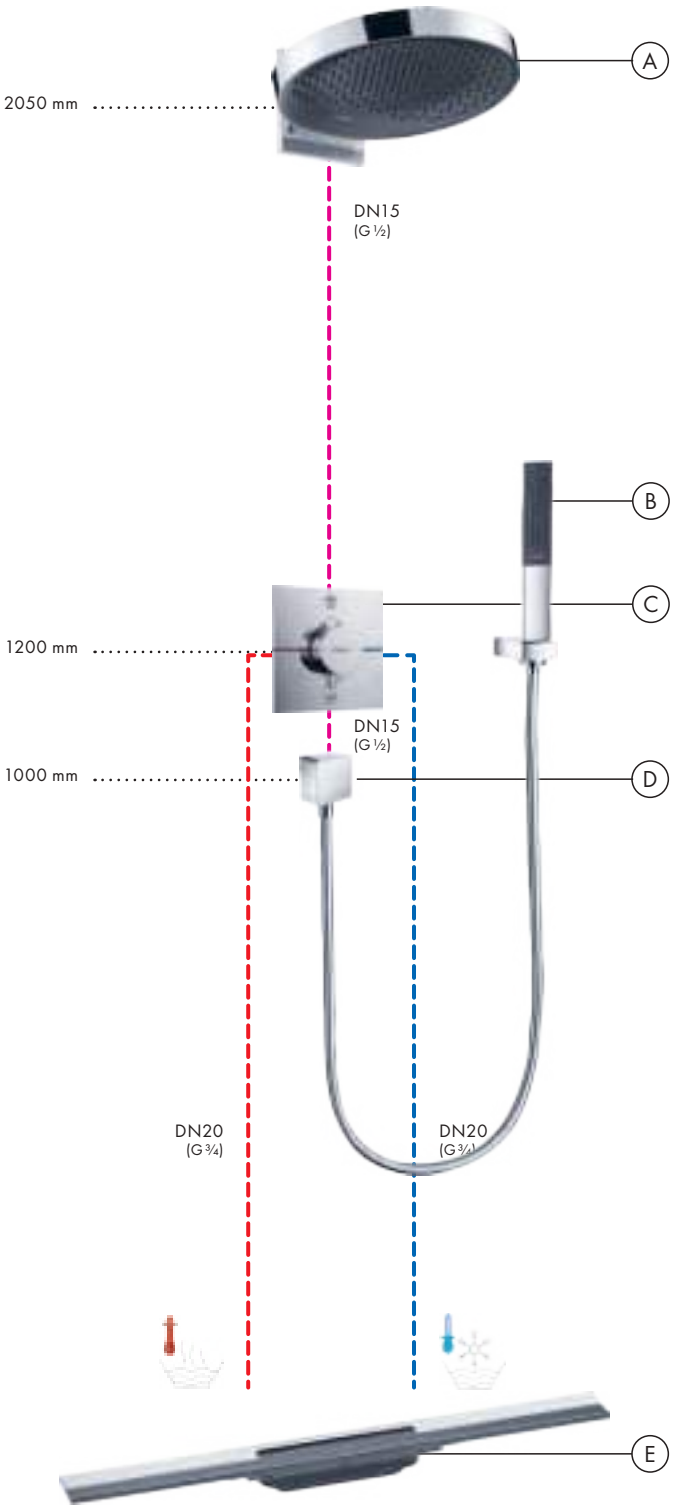

Concealed installation 3 functions

(A) **Rainmaker Select**
Overhead shower 460 2jet
with shower arm
24005, -400

Basic set iBox universal (not shown)
01800180

(B) **Raindance Select S**
Hand shower 120 3jet
26530, -400

Shower holder Porter S
28331, -000

Isiflex
Shower hose 160 cm
28276, -000

(C) Shut-off/ diverter valve S
Trio/ Quattro for concealed
installation
15932, -000

Basic set for Quattro four-way diverter
valve for concealed installation
(not shown)
15930180

(D) Shut-off valve S for concealed
installation
15972, -000

Basic set 130 l/min for shut-off valve
for concealed installation spindle
(not shown)
15970180

(E) **Ecostat S**
Thermostat HighFlow for concealed
installation
15756, -000

Basic set iBox universal (not shown)
01800180

(F) **FixFit**
Wall outlet S with non-return valve
and synthetic connection angle
26453, -000

(G) **Raindrain**
Complete set waste set 90 XXL
60067, -000

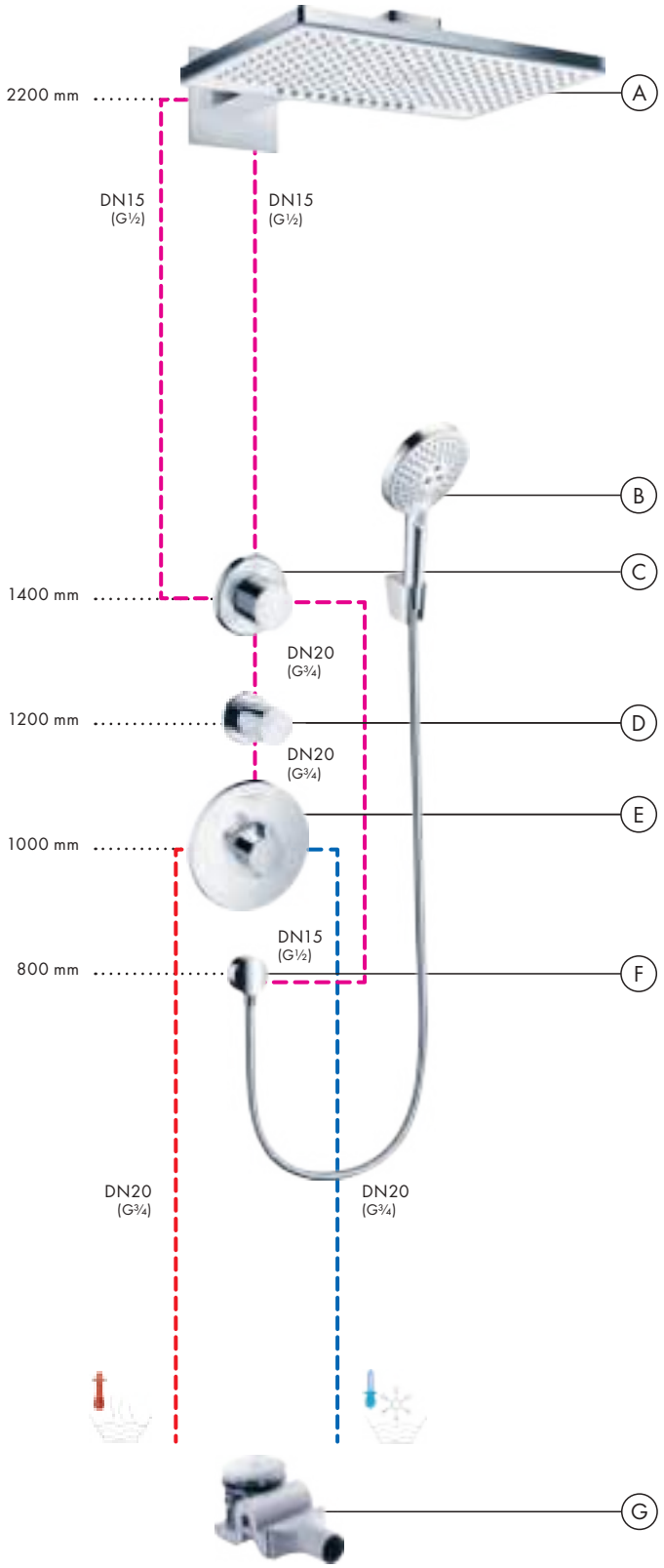

Concealed installation 3 functions

Ⓐ **Pulsify S**
Overhead shower 260 2jet
with wall connector
24150, -000

Basic set iBox universal (not shown)
01800180

Ⓑ **Pulsify Select S**
Shower set 105 3jet Relaxation
EcoSmart with shower bar 90 cm
24171, -000

FixFit
Wall outlet Square
with non-return valve
26455, -000

Ⓒ **ShowerSelect**
Valve for concealed installation
for 3 functions
15764, -000

Basic set iBox universal (not shown)
01800180

Ⓓ **ShowerSelect**
Thermostat HighFlow
for concealed installation
15760, -000

Basic set iBox universal (not shown)
01800180

Ⓔ **RainDrain Flex**
Finish set shower drain 700 cuttable
56043, -000

Base set for finish sets for standard
installation (not shown)
01001180

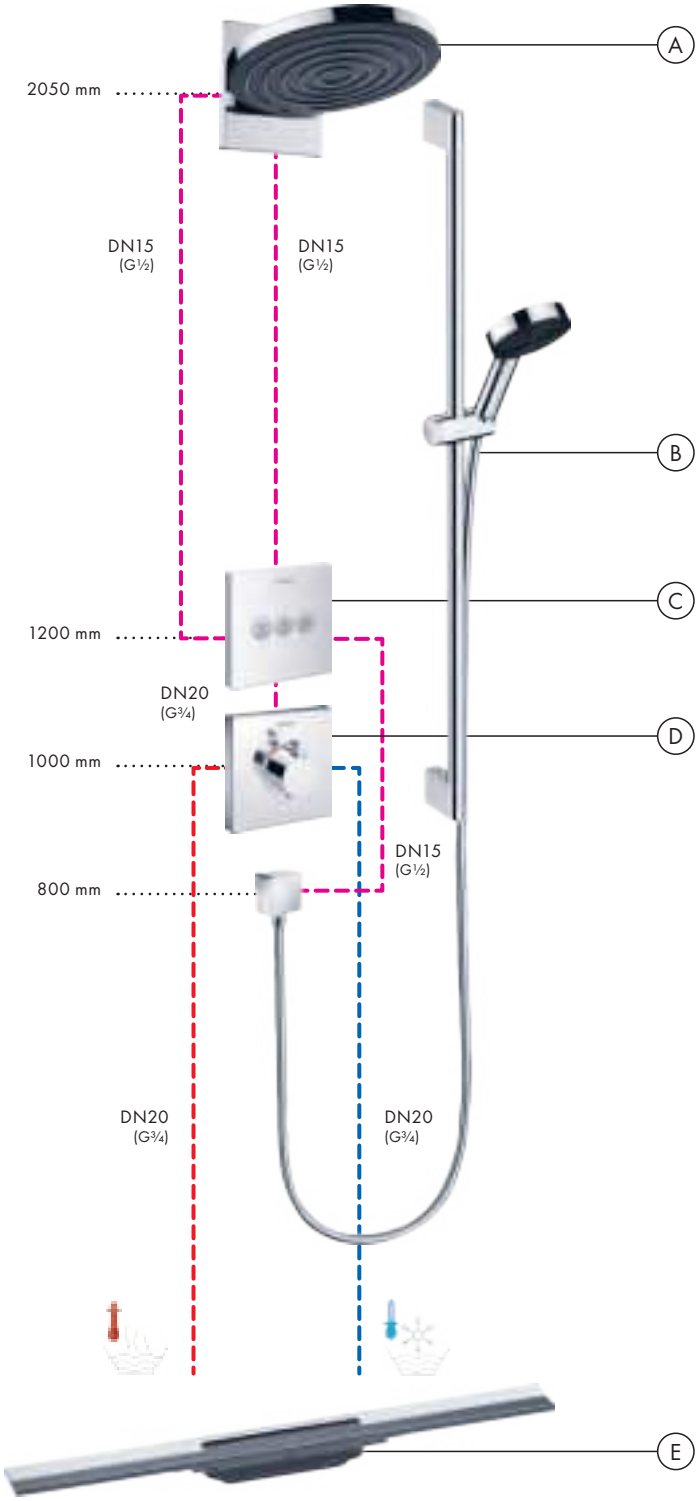

Concealed installation 3 functions

Ⓐ **Rainmaker Select**
Overhead shower 460 2jet
with shower arm
24005, -400

Basic set iBox universal (not shown)
01800180

Ⓑ **Raindance Select S**
Hand shower 120 3jet
26530, -400

Ⓒ **RainSelect**
Thermostat for concealed installation
for 3 functions with integrated shower
holder
15356, -400

Basic set for 3 functions (not shown)
15311180

Ⓓ **Isiflex**
Shower hose 125 cm
28272, -000

Ⓔ **Raindrain**
Complete set waste set 90 XXL
60067, -000

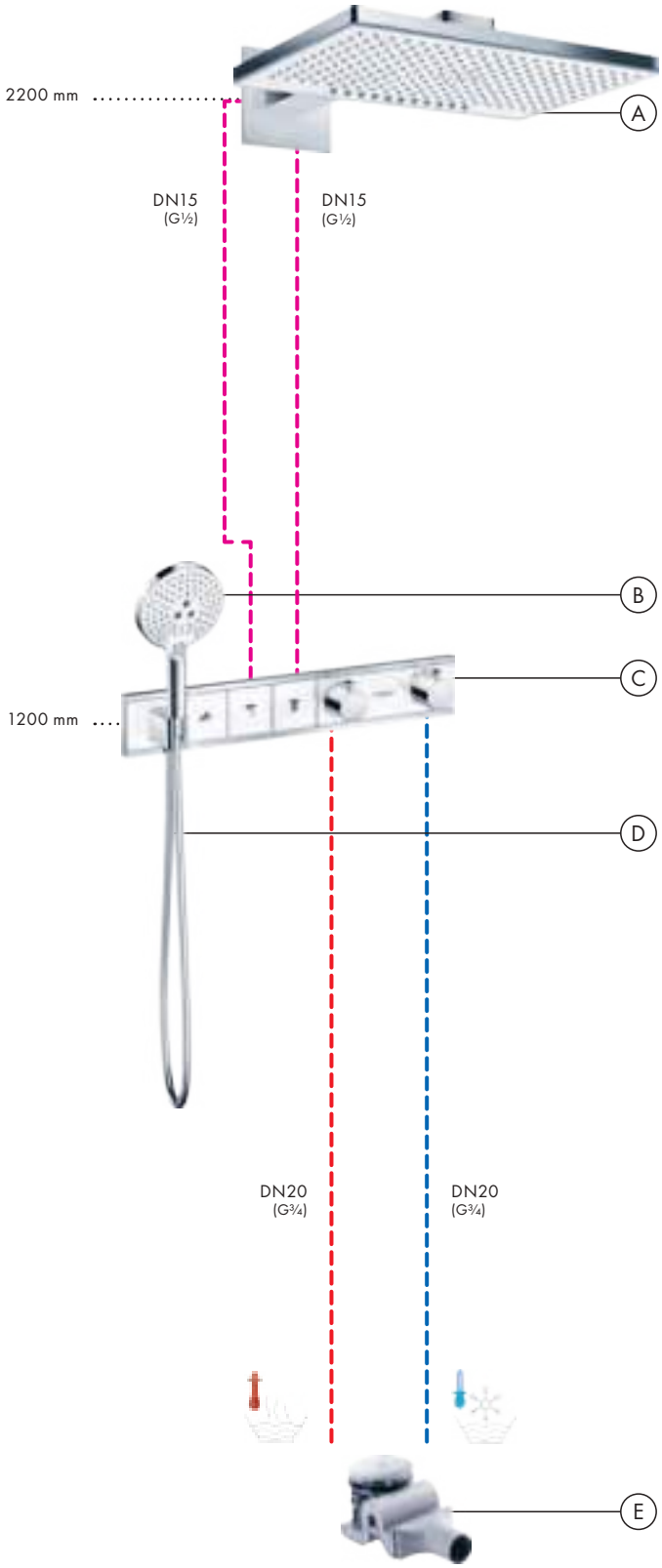

Concealed installation 3 functions

Ⓐ **Rainfinity**
Overhead shower 360 1jet
26231, -700

Ceiling connector S 10 cm
27393, -700

Ⓑ **Rainfinity**
Shoulder shower 500 1jet
with shower shelf
26243, -700

Ⓒ **Rainfinity**
Hand shower 130 3jet
26864, -700

Rainfinity
Wall outlet Porter 500
with shower holder
and shower shelf left
26843, -700

Ⓓ **RainSelect**
Thermostat for concealed installation
for 3 functions
15381, -700

Basic set for 3 functions (not shown)
15311180

Ⓔ **Isiflex**
Shower hose 125 cm
28272, -700

Ⓕ **Raindrain**
Complete set waste set 90 XXL
60067, -000

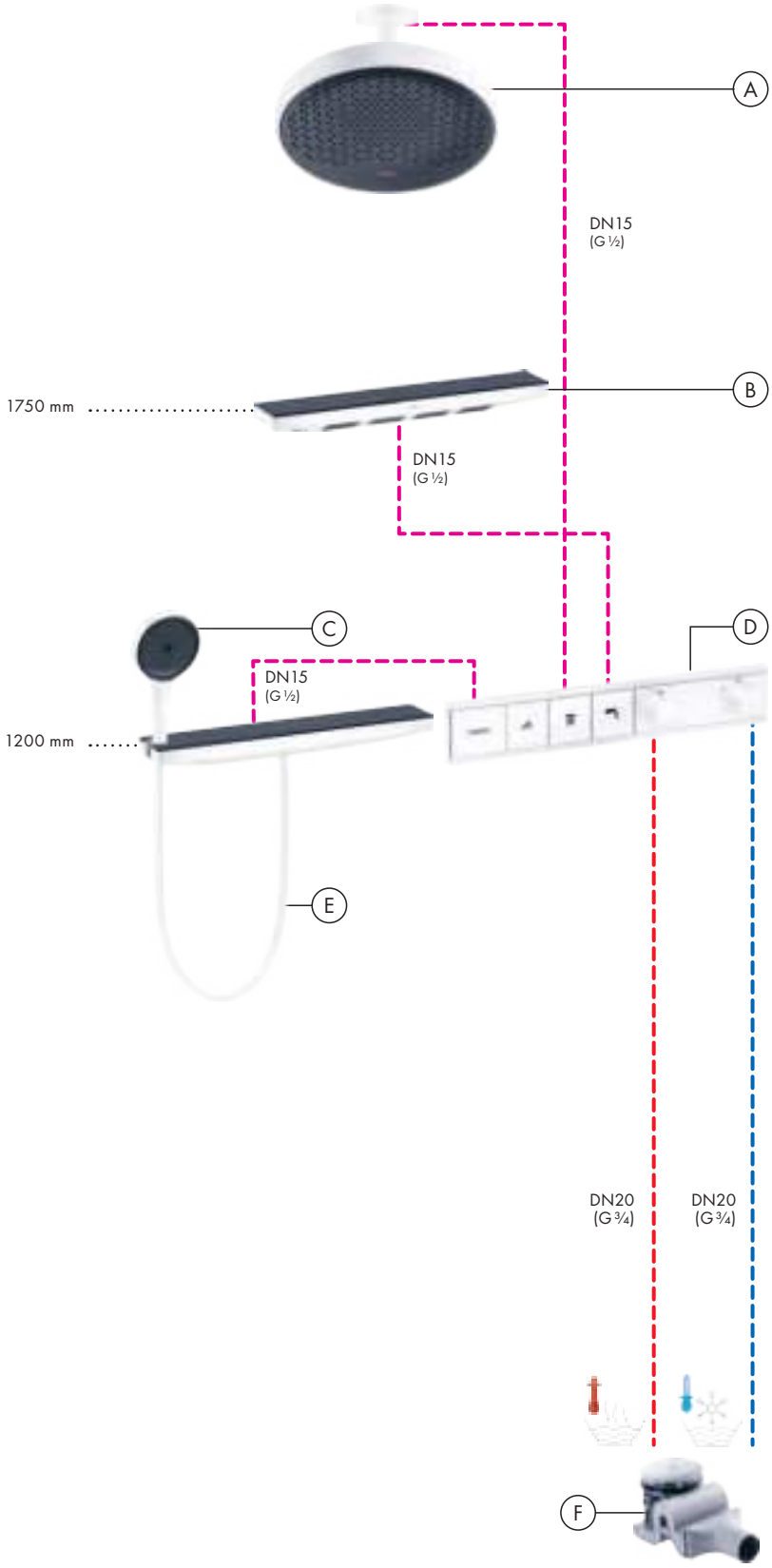

Concealed installation 4 functions

Ⓐ **Rainmaker Select**
Overhead shower 460 3jet
with shower arm
24007, -400

Basic set iBox universal (not shown)
01800180

Ⓑ **Raindance Select S**
Hand shower 120 3jet
26530, -000

Isiflex
Shower hose 125 cm
28272, -000

Ⓒ **RainSelect**
Thermostat for concealed installation
for 4 functions with integrated shower
holder
15357, -400

Basic set for 4 functions (not shown)
15312180

Ⓓ **Raindrain**
Complete set waste set 90 XXL
60067, -000

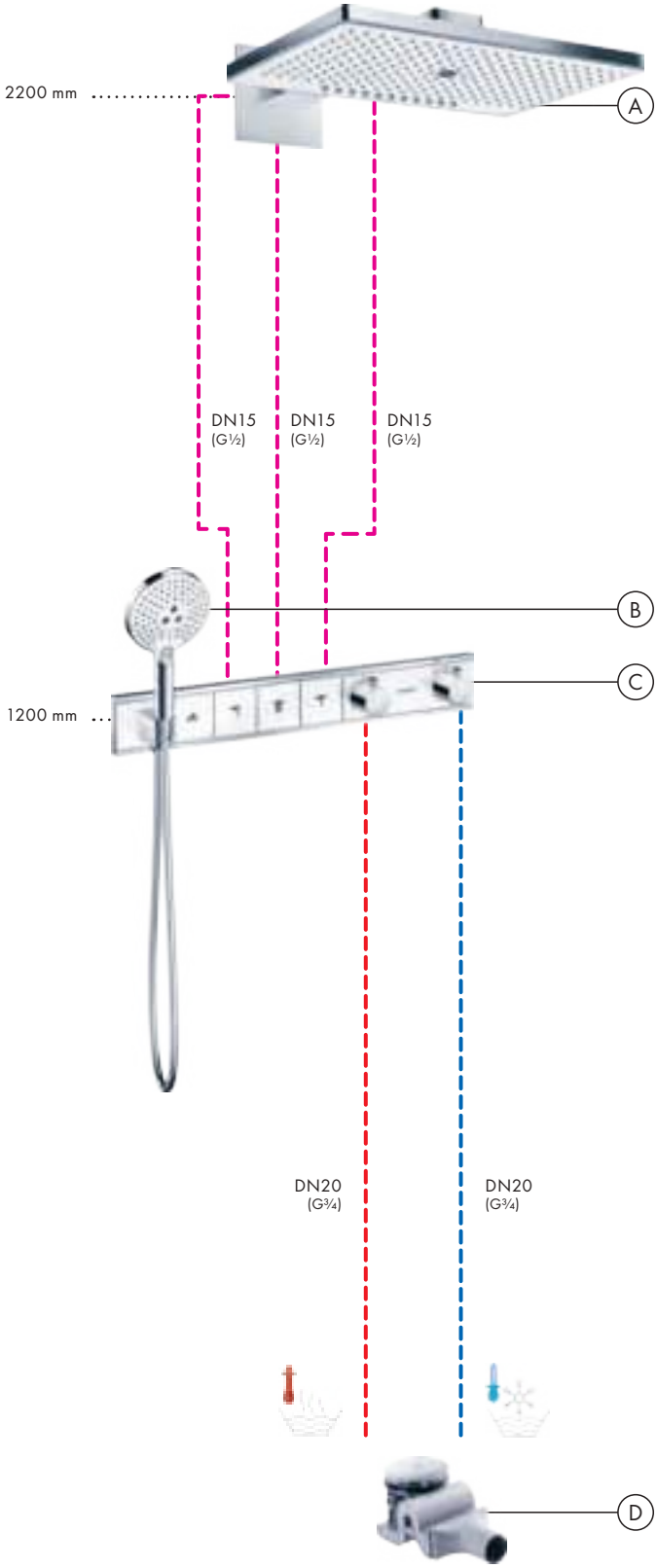

Concealed installation 4 functions

Ⓐ **Rainfinity**
Overhead shower 360 3jet
with wall connector
26234, -700

Basic set iBox universal (not shown)
01800180

Ⓑ **Rainfinity**
Hand shower 130 3jet
26864, -700

FixFit
Wall outlet Porter 500
with shower holder
and shower shelf left
26843, -700

Isiflex
Shower hose 125 cm
28272, -700

Ⓒ **RainSelect**
Thermostat for concealed installation
for 4 functions
15382, -700

Basic set for 4 functions (not shown)
15312180

Ⓓ **Raindrain**
Complete set waste set 90 XXL
60067, -000

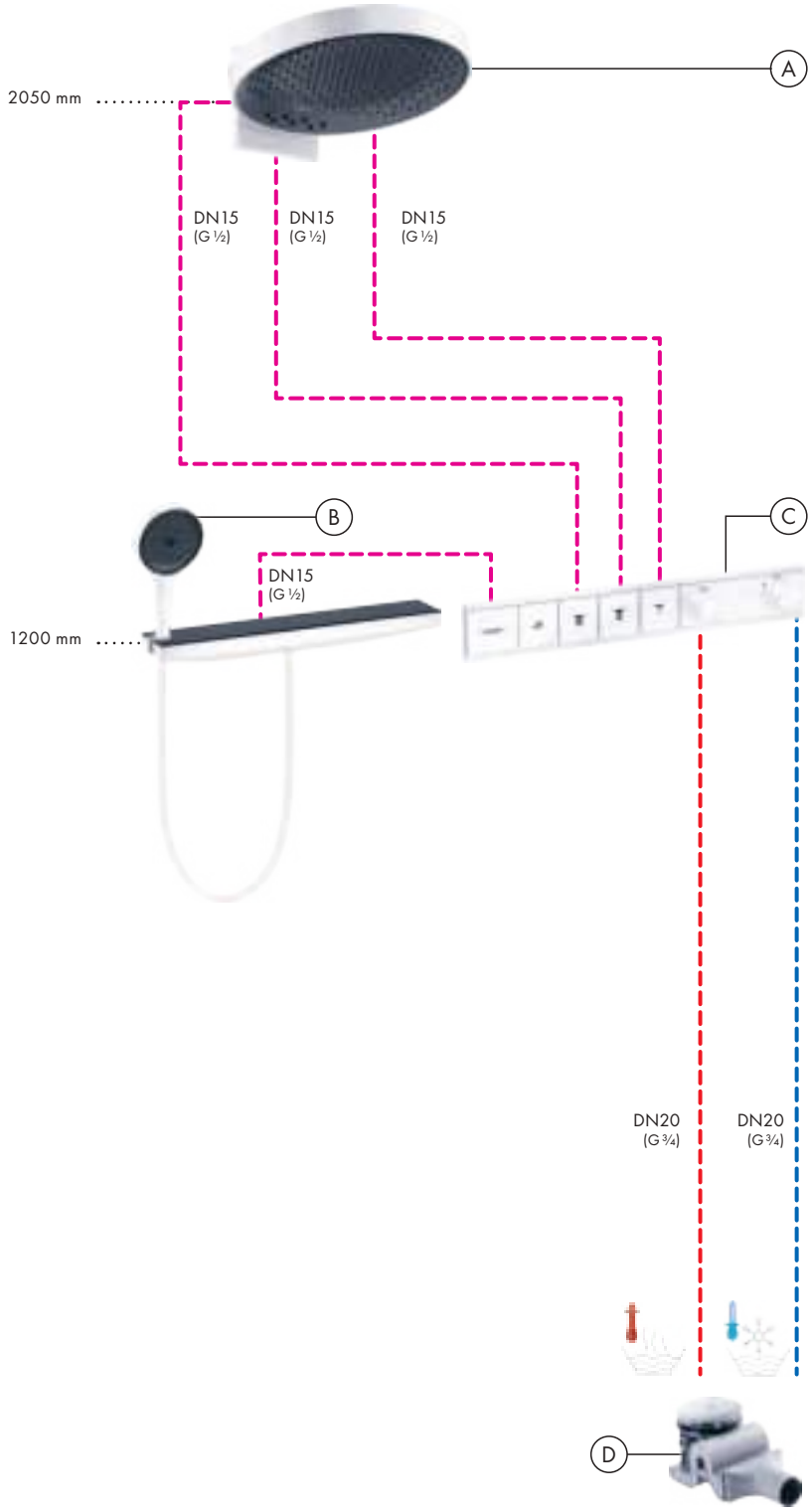

Concealed installation 4 functions

(A) **Rainmaker Select**
Overhead shower 580 3jet
24001, -400

Basic set iBox universal (not shown)
01800180

(B) **Raindance Select S**
Hand shower 120 3jet
26530, -400

Shower holder Porter S
28331, -000

Isiflex
Shower hose 160 cm
28276, -000

(C) **ShowerSelect Comfort E**
Valve for concealed installation
for 3 functions
15573, -000

Basic set iBox universal 2
(not shown)
01500180

(D) **ShowerSelect Comfort E**
Thermostat for concealed installation
for 1 function and additional outlet
15575, -000

Basic set iBox universal 2
(not shown)
01500180

(E) **FixFit**
Wall outlet Square
with non-return valve
26455, -000

(F) **Raindrain**
Complete set waste set 90 XXL
60067, -000

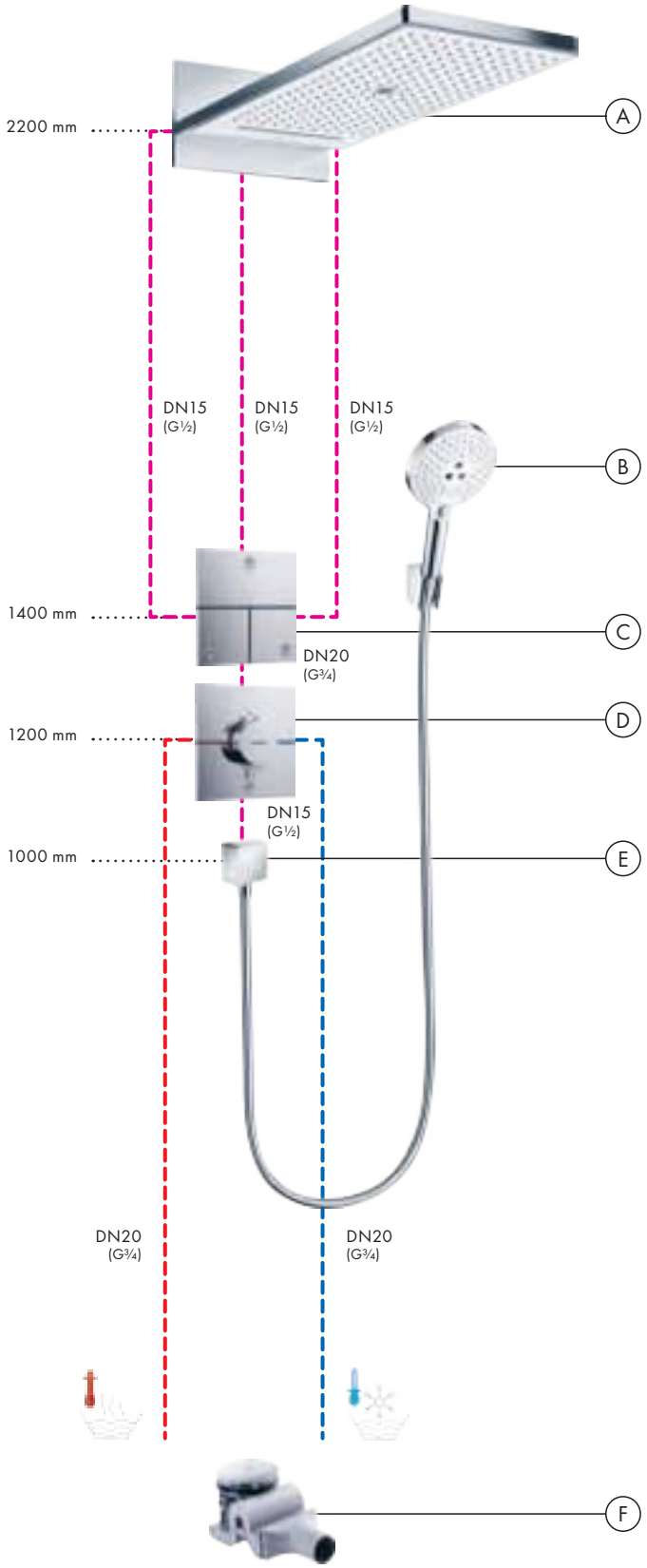

Concealed installation 5 functions

Ⓐ **Rainfinity**
Overhead shower 360 3jet
with wall connector
26234, -700

Basic set iBox universal (not shown)
01800180

Ⓑ **Rainfinity**
Shoulder shower 500 1jet
with shower shelf
26243, -700

Ⓒ **Rainfinity**
Hand shower 130 3jet
26864, -700

FixFit
Wall outlet Porter 500
with shower holder
and shower shelf left
26843, -700

Isiflex
Shower hose 125 cm
28272, -700

Ⓓ **RainSelect**
Thermostat for concealed installation
for 5 functions
15384, -700

Basic set for 5 functions (not shown)
15313180

Ⓔ **Raindrain**
Complete set waste set 90 XXL
60067, -000

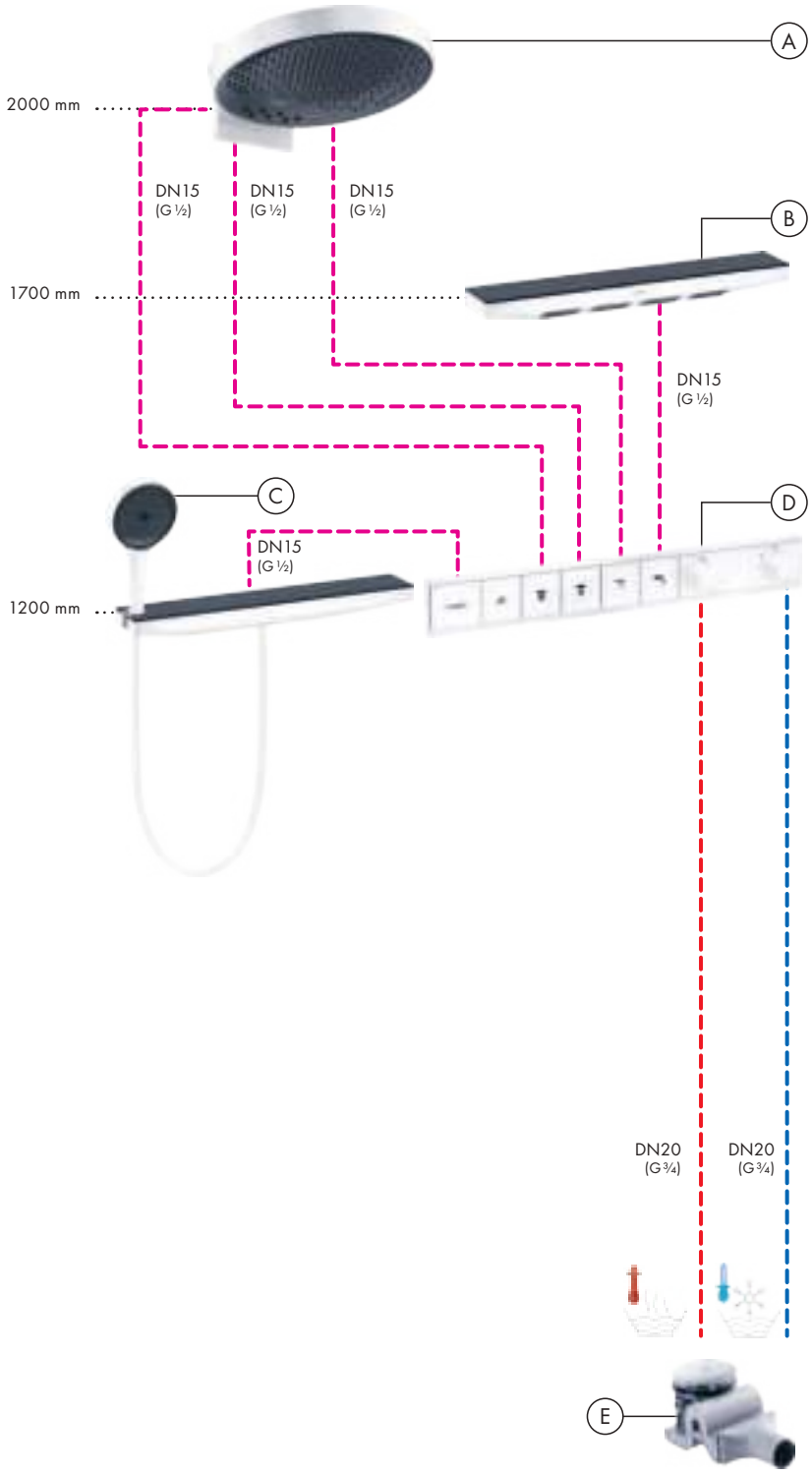

Round tube Showerpipes – flexible in height

Regardless of the height of the room and the water connections, a number of round tube Showerpipes can always be placed in the optimum position. The round tube can only be cut to the right length on the underside, if needed, so individual customer requirements can also be met. You will find additional information in the installation manual.

Room height A

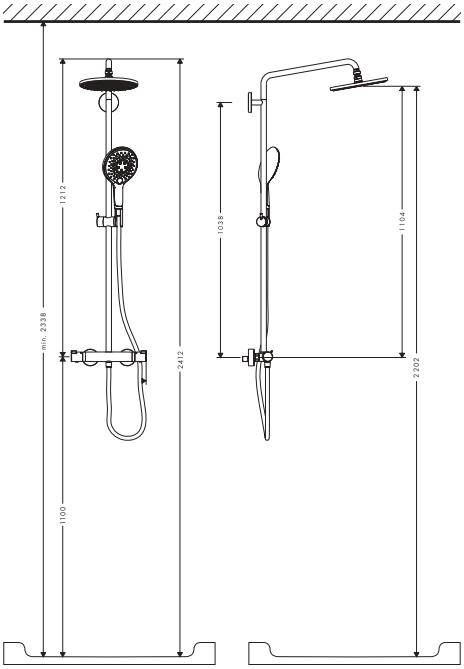

Room height B

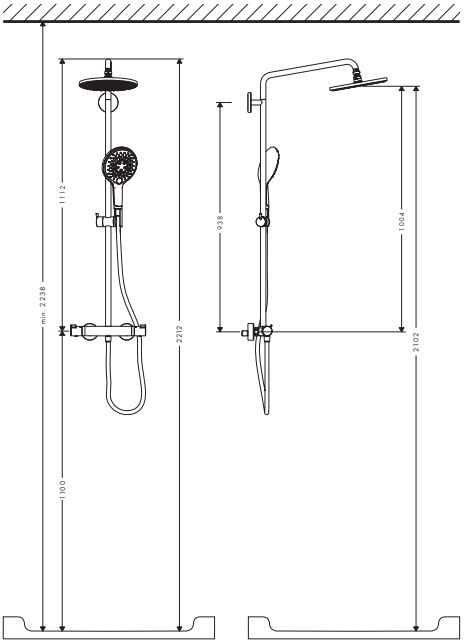

Versatile positioning

The swivelling shower arm makes the Showerpipes extremely versatile – perfect for use in any bath tub or shower situation.

Bath tub installation

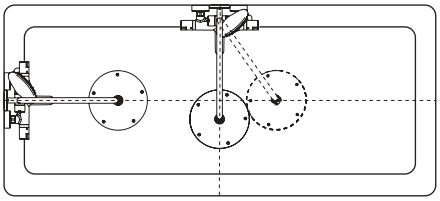

Showerpipes can easily be installed on the front or long side of the bath tub, according to the positions of the water connections. The overhead shower can also be aligned individually.

Shower installation

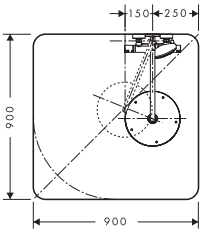

Often, the existing water connections are not positioned in the middle of a shower. Thanks to the swivelling shower arm, the overhead shower can still be placed in the middle of the shower after installation.

All dimensions in mm

Showerpipe exposed installation

Ⓐ **Pulsify S**
Showerpipe 260 1jet
with ShowerTablet Select 400
24220, -000

Ⓑ **RainDrain Flex**
Finish set shower drain 700 cuttable
56043, -000

Base set for finish sets for standard installation (not shown)
01001180

Bath tub exposed installation

Ⓐ **ShowerTablet Select**
Bath thermostat 400
for exposed installation
24340, -000

Ⓑ **Pulsify Select S**
Hand shower 105 3jet Relaxation
EcoSmart
24111, -000

Isiflex
Shower hose 125 cm
28272, -000

Ⓒ **Flexaplus S**
Complete set waste
and overflow set
for standard bath tubs
58150, -000

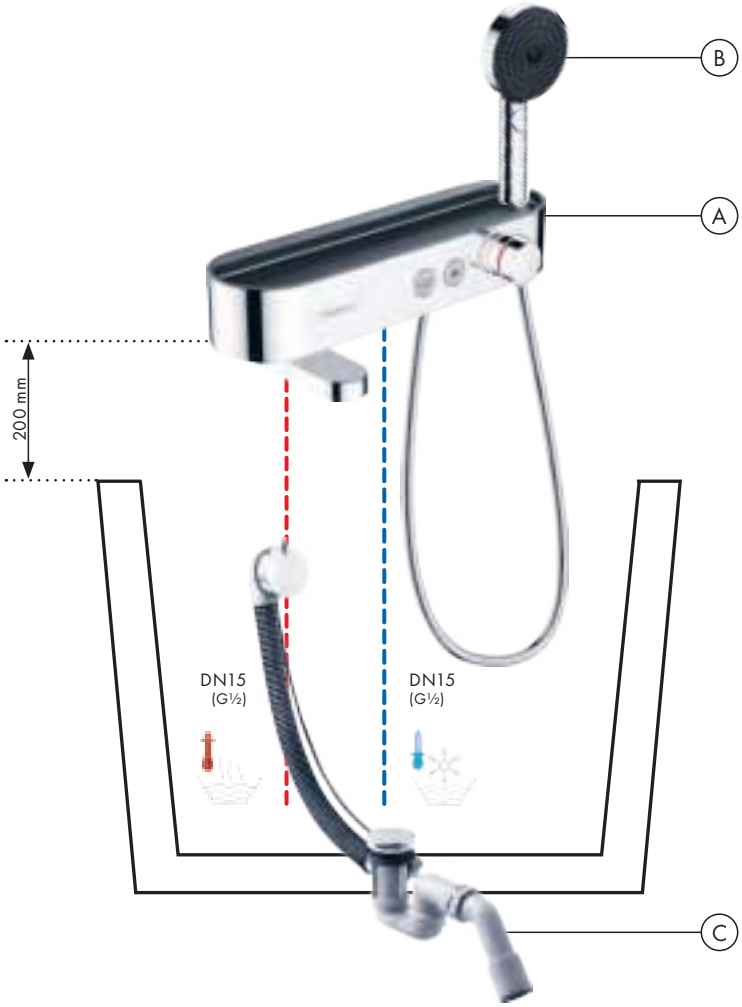

Bath tub concealed installation

Ⓐ **Raindance Select S**
Shower set 120 3jet
with shower bar 110 cm right
26326, -000

Ⓑ **FixFit**
Wall outlet S with non-return valve
and synthetic connection angle
26453, -000

Ⓒ **DuoTurn S**
Mixer for concealed installation
for 2 functionsr
75418, -000

Security combination according
to EN 1717 (not shown)
13077000

Basic set iBox universal 2
(not shown)
01500180

Ⓓ **Exafill**
Complete set bath filler,
waste and overflow set
for standard bath tubs
58123, -000

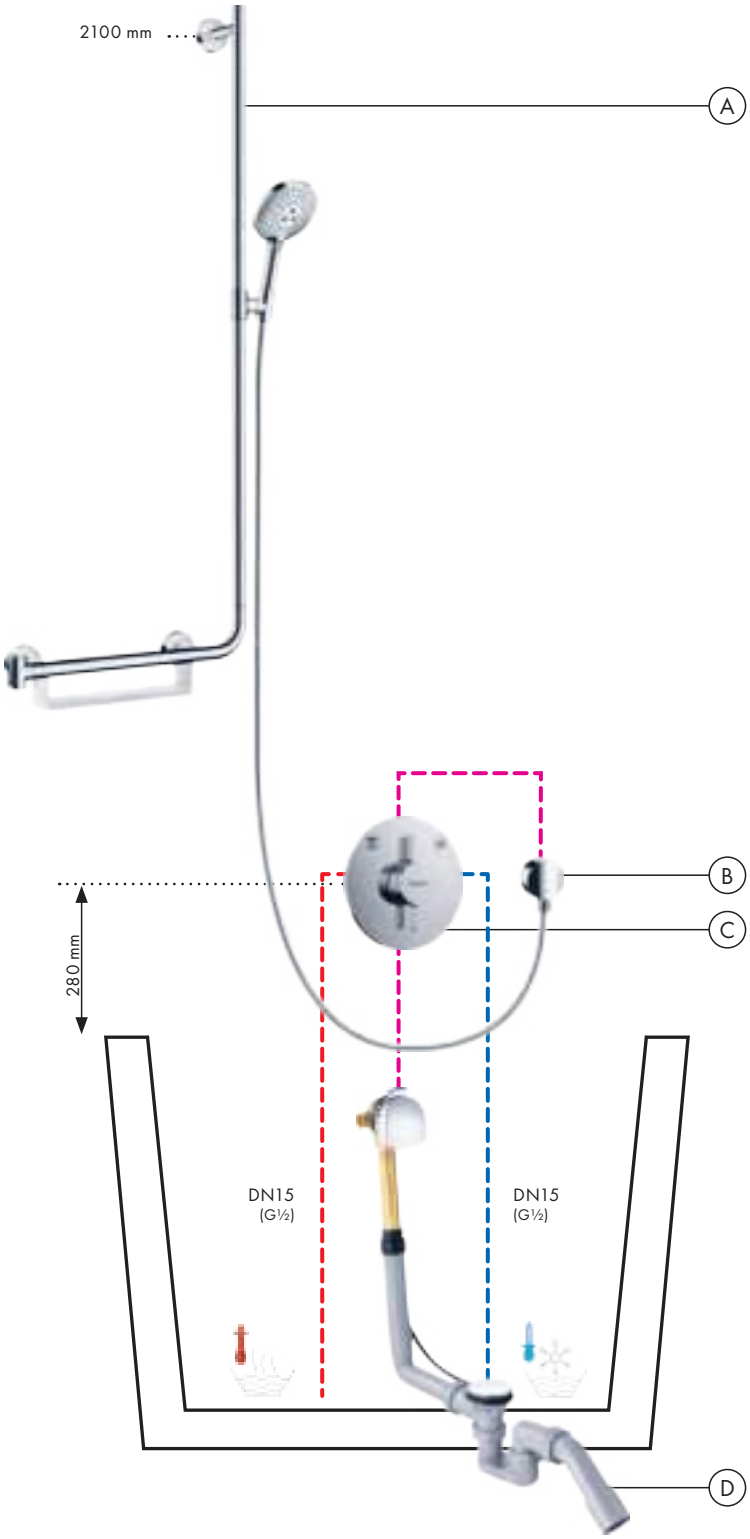

Bath tub rim concealed installation

Ⓐ **Metropol**
Single lever bath mixer for concealed installation with lever handle and integrated security combination according to EN1717
for iBox universal
32546, -000

Basic set iBox universal (not shown)
01800180

Ⓑ **sBox**
Finish set square
28010, -000

Rim and tile mounted bath basic set
13560180

Ⓒ **Raindance Select E**
Hand shower 120 3jet
26520, -000

Ⓓ **Exafill S**
Complete set bath filler, waste and overflow set
for standard bath tubs
58113, -000

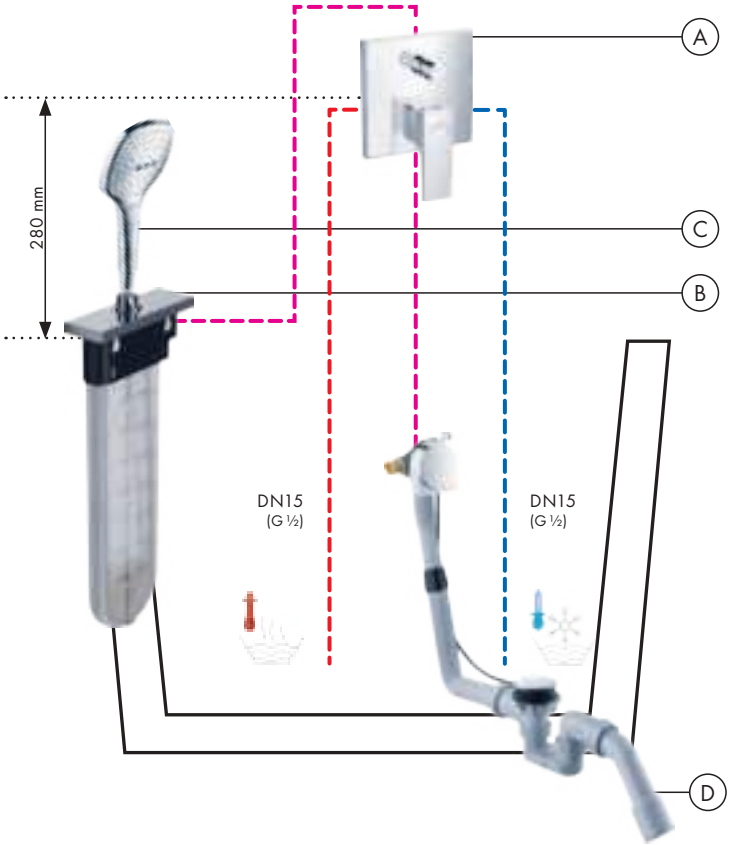

Tile mounted concealed installation

(A) **Metropol**
Single lever bath mixer for concealed installation with lever handle and integrated security combination according to EN1717
for iBox universal
32546, -000

Basic set iBox universal (not shown)
01800180

(B) **sBox**
Finish set square
28010, -000

Rim and tile mounted bath basic set
13560180

(C) **Raindance Select E**
Hand shower 120 3jet
26520, -000

(D) **Exafill S**
Complete set bath filler, waste and overflow set
for standard bath tubs
58113, -000

(E) Installation plate
for tile mounted installation
28016, -000

(F) Mounting angle set
for installation plate
for tile mounted installation
28021, -000

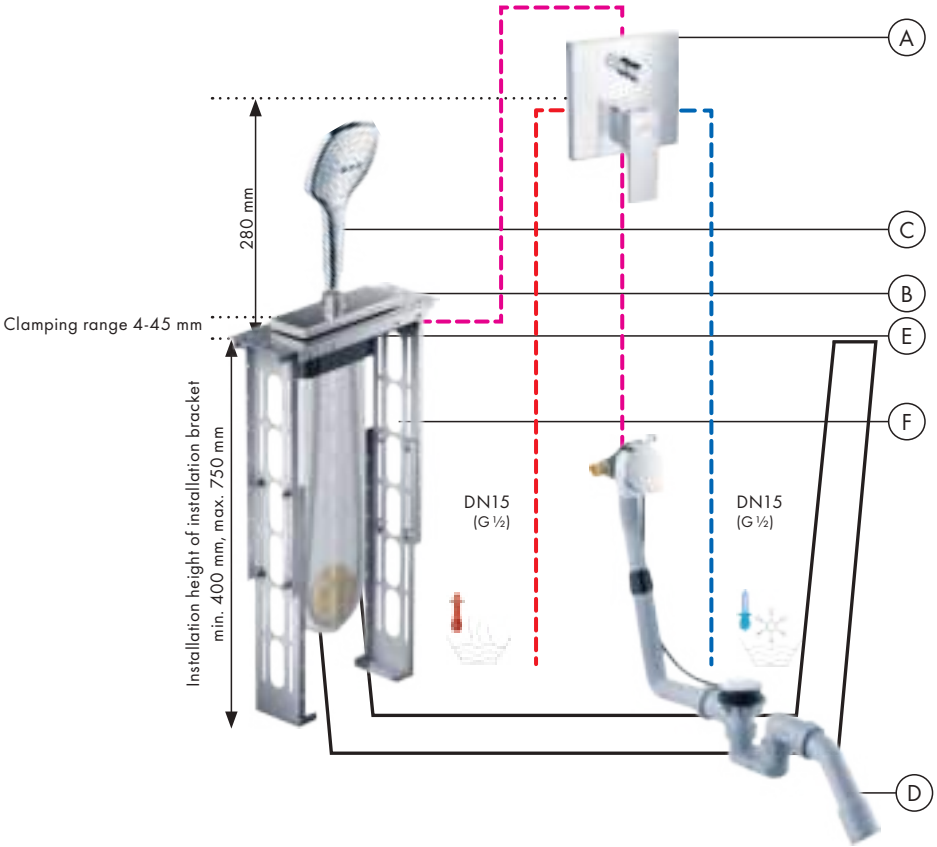

Spare parts

Isiflex Shower hose 160 cm

Features

- high-quality shower hose
- with plastic coating, easy to clean
- shower hose length: 1.60 m
- pivot connector prevents hose from tangling
- kink-protected
- nuts shower hose: conical nut on both ends
- connection thread: G ½

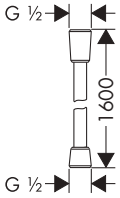

Certificates/declarations

Finish	Code no.
Chrome	28276000
Chrome/Gold Optic	28276090
Brushed Bronze	28276140
Brushed Gold Optic	28276250
Polished Red Gold	28276300
Brushed Black Chrome	28276340
Grey	28276460
Black	28276610
Matt Black	28276670
Matt White	28276700
Brushed Nickel	28276820
Fine Brass	28276840
Satin Chrome	28276880
Brushed Brass	28276950
Polished Gold Optic	28276990

Universal joint for Unica

Features

- dimension: G ½

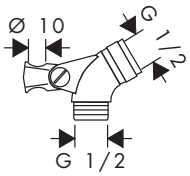

Finish	Code no.
Chrome	28650000

Measurements within scale drawings are in mm.
Technical specifications and units of measure are subject to change.

Support for Unica'88 wall bar Ø 22 mm

Features

- diameter: 22 mm

Finish	Code no.
Chrome	28672000

Support for Unica'E wall bar (satinchrome)

Finish	Code no.
Satin Chrome	96170000

Support for Unica' S Puro wall bar

Features

- diameter: 22 mm

Finish	Code no.
Chrome	97651000

Slider for Unica'D shower bar

Features

- diameter: 25 mm

Finish	Code no.
Chrome	96190000
Satin Chrome	96190880

support Raindance Unica'S

Finish	Code no.
Chrome	98520000

Support Unica'C

Features

- diameter: 22 mm

Finish	Code no.
Chrome	98753000

Mixer spare parts and accessories

Ceramic cartridge complete M3/ M2

Code no.
92730000

Ceramic cartridge M1 complete

Code no.
97685000

Ball cartrigde complete

Features

- for bath and shower mixers

Code no.
14096000

Cartridge complete without mouth spray connection unit

Features

- for washbasin mixers, bidet mixers and single lever kitchen mixers

Code no.
14095000

Joystick cartridge complete J27

Code no.
96783000

Joystick cartridge complete for AXOR mixer

Code no.
96339000

Measurements within scale drawings are in mm.
Technical specifications and units of measure are subject to change.

Service set without service key

Code no.
98804000

Service set

Features

- service key part of delivery
- for mixers with ball mixing systems

Code no.
13952000

Mixer ball without mouth spray connection unit

Features

- for mixers with ball mixing systems

Code no.
13964000

Aerator for Exafill complete

Code no.
96326000

Aerator M24x1 with water dimmer 7 l/min

Features

- QuickClean
- non-splashing water flow
- thread dimension: M24x1
- flow rate: 7 l/min
- usage: bathroom mixer
- packaging unit: 1 piece

Finish	Code no.
Chrome	13085000

Aerator basin mixer 5 l/min

Finish	Code no.
Chrome	95455000

Mixer spare parts and accessories

Aerator M24 x 1 basin mixer

Features

- thread dimension: M24x1
- flow rate: 5 l/min
- with additional value: swivelling
- usage: bathroom mixer

Code no.
95282000

Aerator M24 x 1 basin mixer

Features

- thread dimension: M24x1
- flow rate: 5 l/min
- usage: bathroom mixer

Finish	Code no.
Chrome	92996000

Spray former M24x1 pressureless

Features

- thread dimension: M24x1

Finish	Code no.
Chrome	94033000

QuickClean aerator M24x1 without water dimmer for kitchen mixer

Features

- thread dimension: M24x1
- flow rate: 15 l/min
- usage: kitchen mixer
- packaging unit: 10 pieces

Finish	Code no.
Chrome	13913000

MTC temperature control unit for thermostatic mixer

Features

- wax capsule

Code no.
94282000

Measurements within scale drawings are in mm.
Technical specifications and units of measure are subject to change.

Temperature cartridge for thermostatic mixer DN15

Features

- DN15
- wax capsule

Code no.
92601000

Thermostat cartridge for swapped supply

Code no.
92373000

Temperature cartridge for thermostatic mixer DN20

Features

- DN20
- wax capsule

Code no.
92631000

Thermostat cartridge SMTC

Features

- wax capsule

Code no.
98282000

Thermostat cartridge (BTC)

Features

- wax capsule

Code no.
96633000

Mixer spare parts and accessories

Shut-off unit with ceramic valves

Features

- ceramic
- DN15
- right closing
- closing angle: 180°

Code no.
94149000

Ceramic shut-off unit right-closing

Features

- ceramic
- DN15
- right closing
- closing angle: 90°

Code no.
94009000

Ceramic shut-off unit left-closing

Features

- ceramic
- DN15
- left closing
- closing angle: 90°

Code no.
94008000

Shut-off unit spindle

Features

- spindle
- DN15
- right closing

Code no.
94142000

Shut off unit with selector

Features

- ceramic

Code no.
98283000

Measurements within scale drawings are in mm.
Technical specifications and units of measure are subject to change.

Shut off unit with selector

Code no.
96509000

Diverter for bath mixer for concealed installation with iBox universal

Finish	Code no.
Chrome	95014000

Shut-off unit AV-P DN9

Features

- DN9

Code no.
95758000

Diverter for bath mixer for concealed installation

Code no.
13970000

Diverter complete for bath and shower mixer for concealed installation from 06/1987

Finish	Code no.
Chrome	13971000

Cartridge on/off control for 5 consumer (AUV 50-5)

Code no.
96645000

Diverter complete for bath mixer for exposed installation wall-mounted

Code no.
94077000

Filter packing

Features

· packaging unit = 5 pieces

Code no.
94246000

Sealing foil iBox universal

Code no.
96445000

Sealing set

Code no.
92646000

Replacement toilet brush without stick

Features

· material: plastic

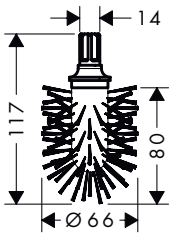

Finish	Code no.
White	40088000

Replacement toilet brush without stick

Features

· material: plastic

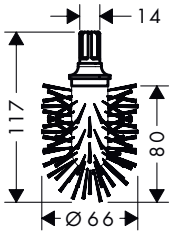

Finish	Code no.
Black	40068000

Measurements within scale drawings are in mm.
Technical specifications and units of measure are subject to change.

Handle for Excentra Fill/ Flexaplus

Finish	Code no.
Chrome	96083000

Safety plug for Excentra Fill/ Flexaplus

Finish	Code no.
Chrome	96153000
Polished Bronze	96153130

O-ring seal 16x2mm

Code no.
98133000

Hose seal

Code no.
98058000

Sealing set for kitchen mixers

Code no.
98702000

Wall bar spacer for Croma 100 Showerpipe

Finish	Code no.
Chrome	95239000

Secuflex metal shower hose for 4-hole rim mounted/ tile mounted bath mixer

Features

- length: 2000 mm
- maximum pull-out length : 1100 mm
- thread dimension: G ½ x G ½

Finish	Code no.
Chrome	94148000

Mixer spare parts and accessories

Secuflex protective hose for 3-hole and 4-hole mixers, 2.00 m

Features

· length: 2000 mm

Code no.
94108000

Thumb plug complete

Finish	Code no.
Chrome	96026000

Seal for pop-up waste set Push-Open G 1 ¼

Code no.
97205000

Cover Exafill

Finish	Code no.
Chrome	95093000

Cover exafill

Finish	Code no.
Chrome	96146000

Fixing screw iBox universal M5 x 55

Code no.
96454000

Filter packing set

Code no.
96922000

Measurements within scale drawings are in mm.
Technical specifications and units of measure are subject to change.

Clip Ø 22 mm for Casetta Unica'88 and Casetta Unica'S soap dishes

Features

· packaging unit: 1 piece

Code no.
96189000

Non-return valve

Features

· packaging unit: 2 pieces

Code no.
94074000

Plug Push-Open

Finish	Code no.
Chrome	97204000

Seal DN32

Code no.
53971000

Rim mounted adapter 25°

Features

· dimension: G ½

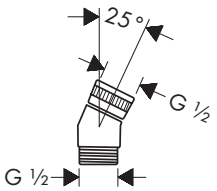

Finish	Code no.
Chrome	28071000

Mixer spare parts and accessories

O-Ring 14x2,5mm

Code no.
98189000

O-ring seal 11x2mm

Code no.
98127000

handspray Talis S

Finish	Code no.
Chrome	97999000

Service set for Team Compact overhead shower

Code no.
92017000

Converter complete

Code no.
96100000

Handle for Ecostat 1001 SL thermostatic mixer for exposed installation

Finish	Code no.
Chrome	96618000

Select adapter

Code no.
92219000

Measurements within scale drawings are in mm.
Technical specifications and units of measure are subject to change.

Seal for stud bolt Ø 45 mm

Code no.
98996000

Connection hose450 mm with M8 x G ⅜ connecting nut

Features

- length: 450 mm
- thread dimension: M8 x G ⅜

Code no.
97206000

Wedge-shaped seal DN32

Code no.
53985000

O-Ring 29x3

Code no.
98371000

Non-return valve for thermostatic mixer

Code no.
92605000

Hose for sink mixer 1250mm

Code no.
95506000

Non return valve OV15/DN15

Code no.
97350000

Mixer spare parts and accessories

Back flow preventer CV15S

	Code no.
	92594000

Thumb plug for plastic pop-up waste

Finish	Code no.
Chrome	92175000

hose for sink mixer 1500mm

	Code no.
	95507000

Support Exafill

Finish	Code no.
Chrome	96094000

Measurements within scale drawings are in mm.
Technical specifications and units of measure are subject to change.

hansgrohe

Life is waterful.

hansgrohe Product catalogue 2025 Bathroom & Kitchen EX en-EN
Subject to change in the interest of technical advancement · Form No. 84121108 · 01/25/0.797· Printed in Germany

4 059625 717745

MIX
Paper | Supporting responsible forestry
FSC® C011124
www.fsc.org

Hansgrohe SE
P.O. Box 1145
77757 Schiltach/Germany
Phone +49 7836 51-0
Fax +49 7836 51-1300
info@hansgrohe.com
www.hansgrohe.com

Discover hansgrohe online and on social media.
Find out more about the hansgrohe world at pro.hansgrohe.com